MM&D Engineering Services, Inc.

6901 S Yosemite Street, Suite 200
Centennial, Colorado 80112

Phase III Drainage Study
For
Boondocks Entertainment Facility

December 21, 2014

Prepared For:

Mr. Randy Fulmer
Select Development & Contracting, LLC
PO Box 1030
Meridian, Idaho 83860

Prepared By:

MM&D Engineering Services, LLC
6901 S Yosemite St., Suite 200
Centennial, Colorado 80112
William E. Miller PE
(303)-908-0062

JN: 12-343

ENGINEER'S CERTIFICATION

The report for the final design of the Replat of Lot 4, Crown Point Filing 1, 15th Amendment was prepared by me in accordance with the provision of the Town of Parker Storm Drainage and Environmental Criteria Manual. I understand that the Town of Parker and its designated town authority do not and will not assume liability for drainage facilities designed by others.

William E. Miller PE

Registered Professional Engineer
State of Colorado No. 13889

By:_____ Date:_____
Authorized Signature

TABLE OF CONTENTS

I Purpose	1
II. General location and Description	1-2
III. Drainage basin and sub-basin	2-11
IV. Drainage design criteria	11-13
V Storm Water Management	13-16
VI. Conclusion	16

Appendix A. Vicinity Map, FIRM & SCS Soils Information

Appendix B. Hydrologic calculations

Time Intensity Curves

Time of Concentration Calc's.

Runoff Calculations

Appendix C. Inlet Calculations

Appendix D. Storm Sewer Hydraulic Calculations

Appendix E. Rip Rap Design into Rain Gardens

Appendix F. Detention & Rain Garden Calculations

Appendix G Emergency Overflow Calculations

Appendix H References

Appendix I Developed Map

Final Drainage Plan
Replat of Lot 4, Crown Point, Filing 1, 15th Amendment

I. Purpose

The intent of this report is to define the general runoff direction and quantities, as well as the receiving facilities of those runoff quantities, together with the locations of the water of existing water quality and detention facilities, to service the property.

II. GENERAL LOCATION AND DESCRIPTION

A. Site Location

The project is located at the southwest corner of Cottonwood Drive and E-470. The entire parcel contains 14.875 acres and access to the individual parcels are from access roads as defined in the final plat of Crown Point, F#1. 14th Amendment as recorded in the Douglas County Records at Reception No. 2007081477, October 17th, 2007. All roads with the referenced F#1 are private and are maintained by the commercial association. The re-subdivided lots within Lot 4 are mainly accessed off of a private road that skirts the west side of lot 4. A right in/right out access is proposed off of Cottonwood about midpoint of the frontage along Lot 4. The project is surrounded by E-470 on the east, Parker Road on the south, Cosco on the west, and proposed commercial property on the north. A vicinity map is included in Appendix A of this report for reference.
The entire project is located in a part of Sections 3 and 4, Township 6 South, Range 66 West of the 6th Principal Meridian, Town of Parker, County of Douglas, State of Colorado.
A replat of Lot 4, Crown Point has been submitted to the Town of Parker for their review. The replat indicates that Lot 4 of F#1 is divided into 5 lots, ranging in area from 1.19 acres in lot 5 to the largest of 9.04 acres for lot 1. Boondocks Entertainment is to be constructed in Lot 1 and will consist of a 30,100 sf building with approximately 3.74 acres of outside entertainment. The outside entertainment consists of two race tracks, two miniature golf courses and a boat bumper pool.

B. Property Description

The property is currently owned by Stratus Companies, LLC and contains a total of 14.875 acres. The existing ground of the entire acreage slopes from the east to the west at an approximate gradient of 2%. The runoff from the property is currently collected in a drainage ditch which flows along the western property from the southwest corner of the property to the northwest corner where it is collected in a temporary water quality and sediment basin.
The lot has had structural fill placed to create the slope that it now has. That structural fill has been reseeded with the native grasses that Urban Drainage has recommended for the area. The ground cover is probably at 75% and has provided protection against erosion. There do not appear to be any rivulets on the property and all the runoff appears to discharge in a sheet flow manner into the aforementioned swale.

A Custom Soil Report was prepared by NCRS for this project through their WEB program. The report identifies the soils as Bressner Sandy loam on 9.2 acres, Mazanola Clay loam over 4.2 acres with the remainder of the area consisting of Bressner-Truckton sandy loam and Sampson loam..

Nunn loam which generally has slopes of 0 to 3% and is found in streams and stream terraces. The soil is well drained and generally the depth to water table is 80 inches or greater. A typical profile is 0 to 3" of loam, 3 to 22" of Clay loam, and 22 to 60" contains Sandy clay

loam, fine sandy loam and sandy loam. A copy of the NCRS report is located in Appendix A, pages A.2 through A.16. Nunn loam is classified as Hydrologic Group C.

There are no major or minor drainage ways nor existing irrigation canals and ditches which are tributary to or traverse the site.

According to the Flood Insurance Rate Map (FIRM) published by FEMA, the subject property is referenced within Map Number 08035C0067F, latest Revision September 30, 2005. The subject property is indicated to be in Zone X which is defined as areas of minimal flooding outside of the 500 year flood area.

In order to ensure proper foundation construction of the future building a soils investigation has been preformed by Ground Engineering. During that investigation ground water was found at 21' below existing grade.. The soils engineer recommends that they be notified during the construction process to evaluate the need for an under drain around the building foundations, especially the extension of the downspouts beyond 10 from the foundation. MM&D Engineering experience indicates the downspout extension is a hit and miss situation during construction. Downspouts and splash blocks have a tendency to move during the final exterior covering of the building surfaces and may not be replaced immediately. We have had extensions left up during heavy spring downpours and during the thawing cycle of a snow storm. Both conditions have inundated the backfill immediate to the building and created problems later in the building's life.

III. DRAINAGE BASINS AND SUB-BAS1NS

A. Major Basin Description

A major drainage study was completed for the Crown Point F#1 development on September 7, 2007 by J.R. Engineering. A more detailed report for Crown Point F#1, 14th Amendment was prepared by Merrick & Company on August 15, 2007. The project is located in the Cherry Creek major drainage way planning area and the Cherry Creek flood hazard area delineation. The project site is located in an unnamed Major Basin tributary to Cherry Creek, which drains approximately 600 acres towards the intersection of South Parker Road and Cottonwood Drive. The site is not within any floodplain as delineated on the FEMA FIRM Map No. 08035C0067F, dated September 30, 2005.

The drainage report complies with the previous reports prepared for the overall site titled *Crown Point F#1, 6th Amendment Final Drainage Report* dated August 2004 prepared by Merrick and Company as well as *Crown Point F#114th Amendment, Final Drainage Report,* dated August 15, 2007 prepared by Merrick and Company. Lot 4 release rates are compared later in the report with those anticipated in the 14th Amendment report. All runoff from the southern portion of Lot 4 will be directed into the existing storm sewer as installed with Lot 2 and the northern portion will be directed into an existing 42" that collects the runoff and transferred it under the access road to Cosco.

B. Site Sub-basin Description

Developed On and Offsite Basins

As described earlier the site is located at the northwest corner of E-470 and S Parker Road intersection. With the construction of E-470 all offsite flows that were historically conveyed across the site have been eliminated. The site historically drained from the east to the west to the Cosco site into existing storm sewer. All the flows are then routed to a "regional" detention pond located northwest of the site.

IV. DRAINAGE DESIGN CRITERIA

A. Regulations

The onsite drainage design complies with the *Town of Parker's Storm Drainage and Environmental Criteria Manual*, the final drainage report *Crown Point F#1, 14th Amendment* prepared by Merrick & Company, August 15, 2007, and the *Urban Storm drainage Manual* by Urban Drainage and Flood Control District. The report and plan also complies with the Town of Parker Flood Plain Ordinance.

As stated earlier the project is not within any 100 year mapped floodplain.

B. Compliance with Towns Stream Preservation Standards

There are no streams which either traverse through or are adjacent to the project. As stated earlier that the overall drainage for the Crown point F#1 is collected in a common water quality and detention pond located on the west end of Crown Point. The water is then carried into Cherry Creek after water quality BMP's.

C. Development Reference Criteria and Constraints

.This drainage design within this study conforms to the drainage design criteria proposed in *Crown Point F#1, 14th Amendment* by Merrick and Company. A comparison of the anticipated runoff flows and the actual calculated flows from our report is summed later in the Conclusions; Drainage Concept of this report.

Drainage Constraints of this site consist of the surrounding roads and storm sewer as well as the existing development of the Cosco site The road constraints consist of E-470 on the west, Cottonwood Dr on the north, Parker Road & E-470 off ramp on the south, 18800 Road on the westerly upper portion of the site, and the Cosco parking lot and associated development structures on the southwestern side of the project. A vicinity map is attached in Appendix A which graphically defines the constraints. However even though these are physical constraints to the site, they are not necessarily a negative constraint. The runoff from the east has been blocked by the development of E-470, the runoff from the northeast is captured in storm sewer in Cottonwood Dr and is transported to a water quality/detention pond, with the development of 18800 Rd into the Cosco complex, a 42" RCP storm sewer was constructed under the access to the commercial site which is to collect runoff from 8.77 acres of the 14.875 acres contributing from the Boondocks/Commercial Site, and a 30" RCP storm sewer with 24" RCP stub-outs for collecting the runoff from the remaining acreage of the Boondocks/Commercial site. All storm runoff from the Boon/docks/Commercial site are collected in the existing storm sewer and directed into the master pond.

D. Hydrology Criteria

The Town of Parker drainage criteria requirements were followed in this report. The minor storm reflects the runoff generated by the 5 year storm and the major storm runoff reflects the runoff from the 100 year storm. All runoff was calculated utilizing the Rational Method for the model and the calculations are reproduced in Appendix B of this report. Since all the runoff from this project is collected into an existing storm sewer system and will be directed into an existing water quality/detention pond site, no ponds were required. The Master Drainage Study already has accounted for the flow generated by the development of Lot 4, Crown point F#1, 14th Amendment.

E. Hydraulic Criteria

There are no "streets" in this development. All access to the proposed buildings will be through private drive lanes. Maintenance of the parking and drive aisles will be the responsibility of the Owners Association. Storm sewer inlets and connecting storm sewer is anticipated to collect all the runoff from the site within the parking areas and be directed into the existing storm sewer. The attached drainage map indicates where the storm sewer is to be located at where it is to connect to the existing storm sewer.
All storm sewer shall be a minimum of 18"RCP pipe per the Town of Parker's Criteria.

F. Variance From Criteria

There is no variance required with this project.

V. Drainage Facility Design

A. General Concept

The project is divided into two major basin. Basin A consists of 21 sub-basins with a total acreage of 16.09 acres. The flows collected in Basins A.1 – A.6 are collected in inlets and connected to the existing 30" storm sewer which is in the road between Cosco and Boondocks. Basin A.7-A.21 collects runoff from approximately 7.19 acres and discharges into inlets proposed within the development. The flows with the A.7-A.21 Basins are directed to the existing 42" storm which crosses 18800 Rd. per the Crown point F#1 14th Amendment drainage report. The remaining Basin, Basin B, is also further subdivided into 4 sub-basins. Basin B.1 and B.2 collect runoff from the south portion of Cottonwood Dr. and it is added with the flows from Basin B.3 and B.4. Basins B.3 and B.4 collect runoff from the east side of 18800 Rd. The sum of the flows are then directed into and existing inlet at the southeast corner of Cottonwood Dr and 18800 Rd. There are no offsite basins tributaries to the project.

The flows from the project are collected in existing storm sewer that was placed during the construction of the infrastructure of the Cosco commercial area. The flow from the southern end of the project is collected into an existing 30" pipe and directed to the existing water quality/detention pond at the west end of Crown Point F#1. The flow from the northern portion of the project is routed to an existing 42" culvert under road 18800 at the intersection about 300' south of the intersection of 18800 Rd and Cottonwood Dr. The 42" pipe is then proposed to traverse across Lot 3, Crown Point F#1 and connect with a 42" pipe located on the west side of Lot 3 where it is to discharge into the existing water quality/detention pond. However because Lot 3 has not been developed and the proposed 42" cannot be located at this time, the developer of Lot 4 and Lot 3 have come to an agreement that the existing 42" pipe that Lot 4 ties into, can daylight in an open channel and direct its flows into an existing temporary sediment control pond as described in the Crown Point F#1, 14th Amendment by Merrick and Company.

The accompanying Appendices contain the tables, charts, and figures required to model the proposed flows, inlet sizes and storm sewer determinations. The majority of the charts are reproduced from the Town of Parker Storm Drainage Criteria Manual or Urban Drainage and Flood Control Volumes. Appendix E contains the drainage map from the Merrick & Company report referenced herein. Its use is three fold, to give a graphic depiction of the drainage flow direction, the flow quantities expected at the connecting pipes from the Boondocks/commercial site as well as the intent of the engineered master plan.

Because of the master planning of the Crown Point F#! Project, there are no problems which occur with the development of Lot 4.

As previously discussed, all the flows generated within the project are collected in inlets located within the property or along the westerly adjoined accesses. The runoff will not be transported downstream other than in the controlled confines a storm sewer.

B. Specific Details

As previously explained the project is broken into two major basins (A & B). The basins and their sub-basins are shown on the attached drainage map as well as the design points. Each design point reflects the runoff from the sub-basins for the 5 year and 100 year storms. The inlets were designed to capture 100% of the runoff. There are no problems associated with the design of this project. All flows are captured in a pipe and delivered to the points as delineated in the Crown Point F#1, 14th Amendment.

The design point summations and inlet size is reproduced on page C.16 of Appendix C. Inlets at DP 1 though DP 3 shall be type C inlet with close mesh grate. Inlets at DP 1 and DP 3 total flow assumes that all the internal private inlets are fully plugged with debris. All of the type C inlets are designed to be set at the elevation that will allow 100% of the total plugged flow to be captured. The inlets at DP 4 thru 13, DP 15 thru DP 17 are designed to be 5' type R inlets in sump condition. The flow at DP 14 is the anticipated flow that will pass through a proposed chase section.

DP 18, DP 19. & DP 20 are anticipated collection points for the commercial area which is not, at this time designed. The flows to the design points are assumed to be picked up in type R inlets, but because of the chance of a different layout, the size and type of inlets may be altered. Since the exact location of the collection points are not know, an 18" pipe will be stubbed to the north to capture the flow from DP 18 & DP19 and an 18" pipe will be stubbed to the south to capture the flow from DP 20.

The design points associated with Basin B are B.1 thru B.4. DP B.1 reflects the flow which is in the existing curb of Cottonwood Dr. to Basin B.2. Basin B.2 flows are then routed to the intersection of Cottonwood Dr and 18800 DFR where it is added with flow from Basin B.4 at DP 24. DP.23 reflects the flow from Basin B.3 to the curb in Basin B.4. All flows from B.4 and B.2 are added and enter the existing 10' Type R inlet at the intersection of Cottonwood Dr and 18800 RD.

C. Detention Storage Requirements

Because a water quality/detention facility was designed with the Crown Point F#1, which is to accommodate all the runoff from the Crown Point Subdivision, neither detention or water quality is required.

D. Outlet Requirements

There are no requirements for an outlet configuration on the project.

E. Storm Sewer Discussion & Swale Description

The storm sewer calculations, inlet calculation and temporary swales are reproduced in Appendix C and D. Generally the proposed storm sewer is to connect to the existing storm sewer at DP 1, 2,3,4 on the south side and DP 28 on the north side. A graphical representation of those connections is shown on the attached drainage map. The swale

calculation is also shown on Appendix D. The proposed channel is to transport the runoff from DP 28 across Lot 2 to the existing swale and the existing sediment ponds.

A summation of the comparison of the original design flows at DP 4 and DP 5 as shown in the Crown Point F#1, 14th Amendment with those of the total flow in the existing 30" RCP as it leaves the project, the 42" RCP as it collects runoff from the northern portion, and the discharge into the existing 10" Type R at Cottonwood Dr and 18800 Rd is as follows:

Flow in 30" RCP	**Q(5)**	**Q(100)**
14th Amendment		
At DP 5	**14.9**	**33.0**
This report DP 6	**7.6**	**21.8**

Flow in 42" RCP		
14th Amendment		
At DP 4	**32.9**	**70.3**
This Report DP 28	**17.1**	**37.3**

Flow at Cottonwood		
14th Amendment		
At DP 3	**7.1**	**14.6**
This report	**2.2**	**13.8**

As can be deduced from the flow comparison the amount of runoff is less than that which was originally calculated in the Merrick Report.

The flow from the 42" RCP needs to be routed in a grassed channel. Those calculations for this channel are located in Appendix D, pages D.25 and D.26. The channel is designed at a natural slope of 0.94%, with a 5' base and 4:1 side slopes.

F. Stormwater Utility Eligible Facilities
All of the onsite facilities are private. However, the discharge from the 42" across Lot 2 may be considered public since it is taking private water across an adjacent property.

VI. Environmental Protection Criteria

A. General
The site contains 14.875 acres of undeveloped property. The area has previously been graded and the vegetative stand that was reseeded after construction appears to be about 70% coverage. The soils consist of weathered claystone/siltstone, claystone/siltstone and sandstone bedrock. This resubdivision of Lot 4 is being subdivided into 5 commercial lots, private drives and utilities.

There are no wetlands or potential T & E species. The site does not contain habitat protection areas or stream restoration. The site is in compliance with state and federal environmental permitting regulations. There are no variances requested for this project.

C. Construction BMP Plan
The site erosion control measures are to be placed on the site to reduce on site erosion, prevent sediment from entering the storm sewer system, and to eliminate sediment deposit

runoff onto off-site properties. There currently exists one on site temporary sediment pond which will be utilized until other areas have been filled and stabilized with reseeding. Once the reseeding has been placed, the existing sediment pond will be filled and the outlet plugged in order to prevent any sediment from leaving the site. The inlets will be protected by inlet protection until construction has been completed. Any inlets that may continue to receive runoff from undeveloped areas will have the soil protection retained until full upstream development. All areas not covered by asphalt concrete, building or permanent landscaping shall be seeded with an approved native seed per the Towns specifications. The contractor shall be responsible for the inspection; maintaining and replacing erosion control measures during the construction sequence.

D. Permanent BMP Plan

All flows remain within the Crown Point F#1 development and are directed into an existing water quality/detention pond.

VII CONCLUSION

A. Compliance with Standards

The drainage report and calculations are in compliance with the Town of Parkers Storm Drainage and Environmental Criteria.

B. Drainage Concept

The design presented in this report effectively controls the peak runoff generated from this site. Temporary erosion control sediment basin will be placed at undeveloped areas to control the release of sediment from the undeveloped sites. The development of the basin will be addressed in detail with the Grading Erosion Sediment Control Plan to be presented with final construction documents. The development of sites other than that of Boondocks is unknown at this time.

Storm drain pipes and inlets have been designed to accommodate the 100 year storm in all cases. Although all of the inlets are located on private property, they have been design with the Town Criteria for both the Type R and the Type C inlets.

C. Sediment & Erosion Control Concept

The sediment and erosion control plan will effectively contain sediment and storm water quality through the interim and final stages of the plan.

APPENDIX A

Vicinity Map, FEMA (FIRM) & SCS Soils Information

APPENDIX B

Hydrologic Calculations

APPENDIX C

Inlet Calculations

APPENDIX D

Storm Sewer Hydraulic Calculations

APPENDIX E

References

Final Drainage Report
Crown Point F#1, 14th Amendment
Parker, Colorado

REFERENCES

1. United States Department of Agriculture Natural Resources Conservation Service. Soil survey of Castle Rock Area, Colorado.

2. Town of Parker. Storm Drainage and Environmental Criteria Manual. Revised February, 2014.

3. Federal Emergency Management Agency. F.E.M.A. flood Insurance Rate Map (FIRM) Douglas County, Colorado Community Panel Number 08035COO67F, Effective September 30, 2005.

4. Urban Drainage and Flood Control District. Urban Storm Drainage Criteria Manual June, 2001.

5. JR Engineering Final Drainage Report for Crown Point September, 2000.

6. Merrick & Company Crown Point Filing No. 1, 14th Amendment Final Drainage Report. August 15, 2007.

7. Haested Methods. Storm CAD.

Location Map

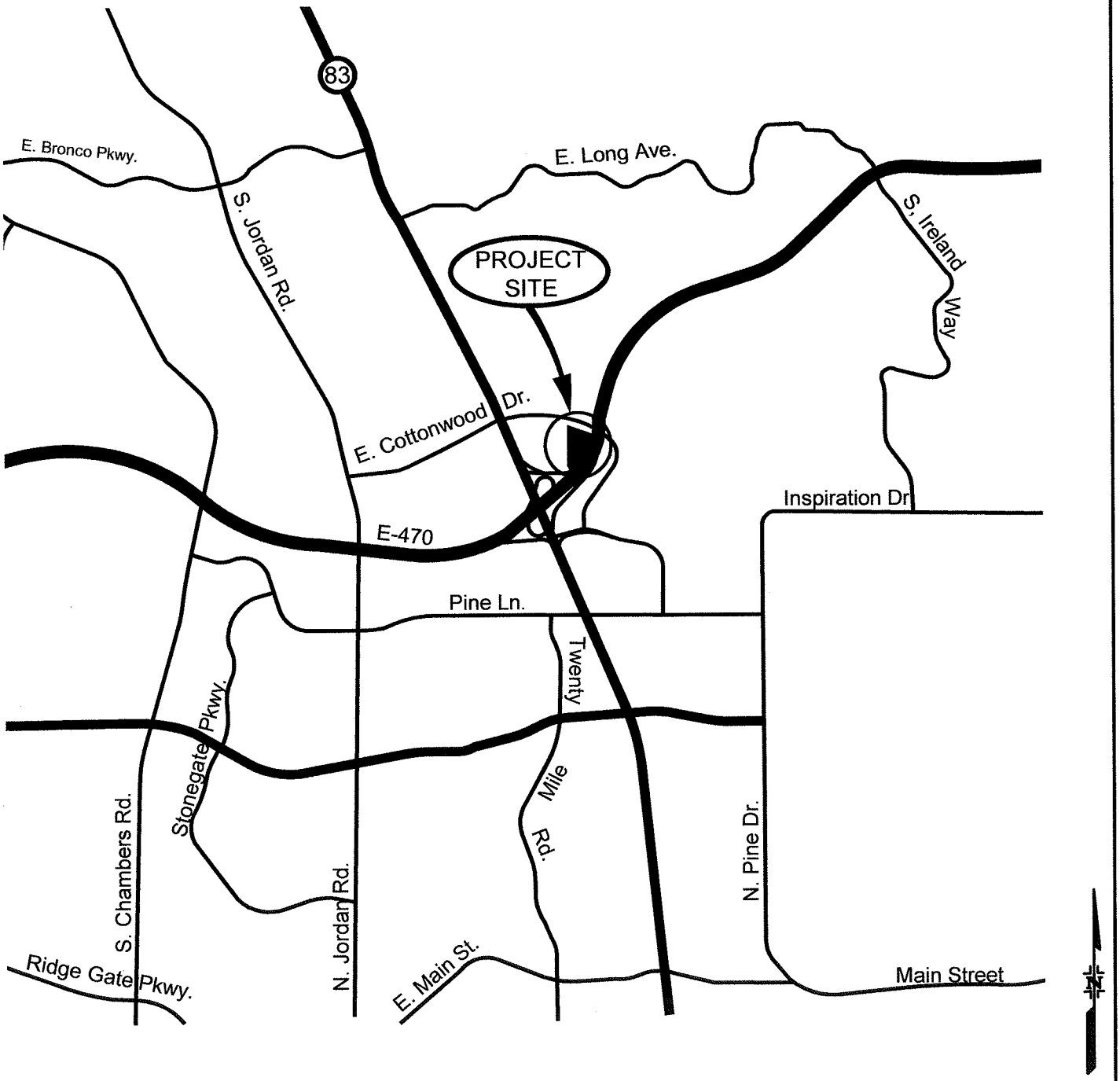

MM&D Engineering Services, Inc.

William E. Miller, P.E.

ENGINEERING*CONSTRUCTION MANAGEMENT*SURVEYING

9125 North Clydedale Road
Castle Rock Colorado 80108
PH (303) 908-0062 ☆ FAX (303) 708-8399

Project Name:
Boondocks

DATE: 01/30/14
DES/DFT: WEM/kem
PROJ NO.: 13-343
SHEET: 1 of 1

A11

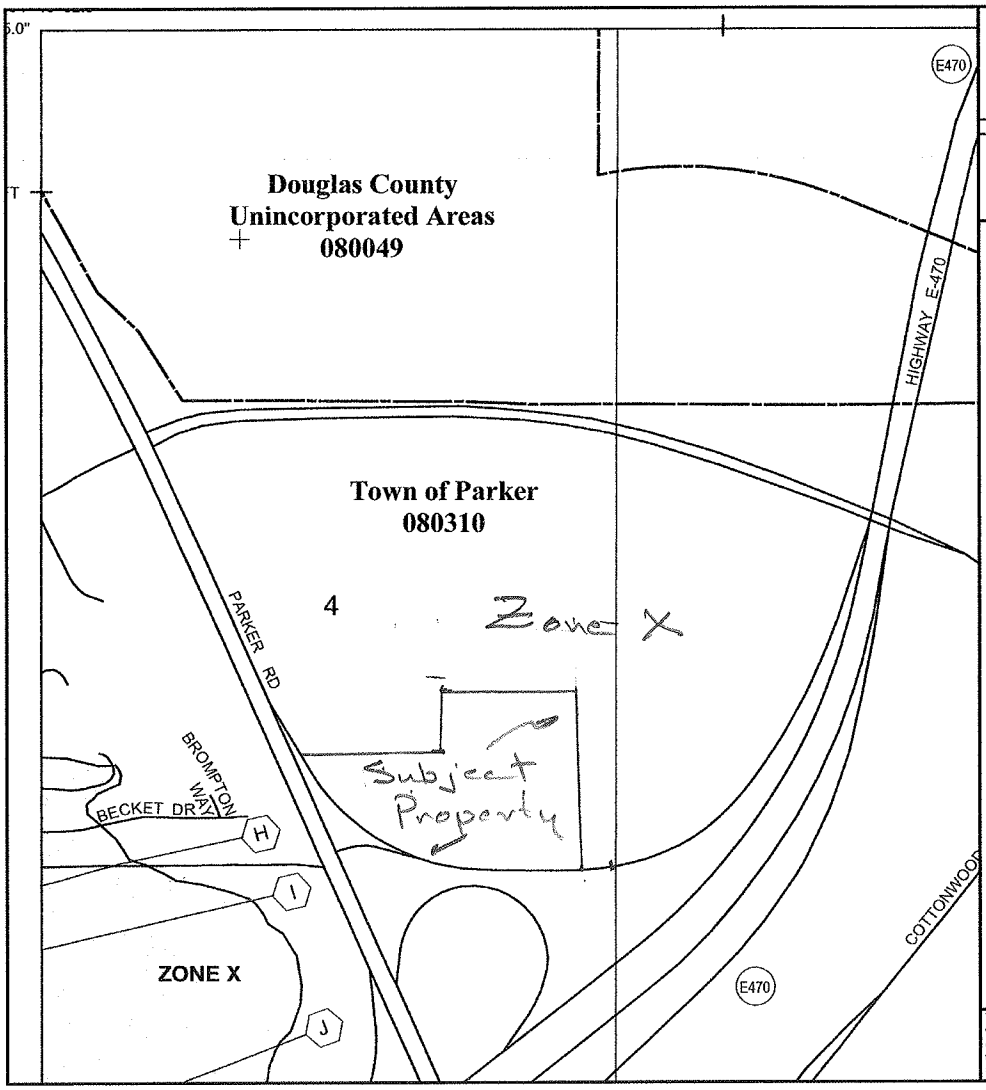

MAP SCALE 1" = 500'

500 1000 FEET

PANEL 0067F

FIRM

FLOOD INSURANCE RATE MAP

DOUGLAS COUNTY, COLORADO
AND INCORPORATED AREAS

PANEL 67 OF 495

(SEE MAP INDEX FOR FIRM PANEL LAYOUT)

CONTAINS

COMMUNITY	NUMBER	PANEL	SUFFIX
DOUGLAS COUNTY	080049	0067	F
PARKER, TOWN OF	080310	0067	F

Notice to User: The **Map Number** shown below should be used when placing map orders; the **Community Number** shown above should be used on insurance applications for the subject community.

MAP NUMBER
08035C0067F

EFFECTIVE DATE:
SEPTEMBER 30, 2005

Federal Emergency Management Agency

This is an official copy of a portion of the above referenced flood map. It was extracted using F-MIT On-Line. This map does not reflect changes or amendments which may have been made subsequent to the date on the title block. For the latest product information about National Flood Insurance Program flood maps check the FEMA Flood Map Store at www.msc.fema.gov

A.2

FEMA

Info Scale 16 LOMC 1

Help

Zoom Win Pan

Zoom In Zoom Out

1:1 Zoom In MAX Zoom Out

Follow Instructions

Select page size

Letter 8.5x11

Legal 8.5x14

Tabloid 11x17

Select & Move Areas

Print Area

Scale and North Arrow

Title Block

Create FIRMette

Adobe PDF

Image File

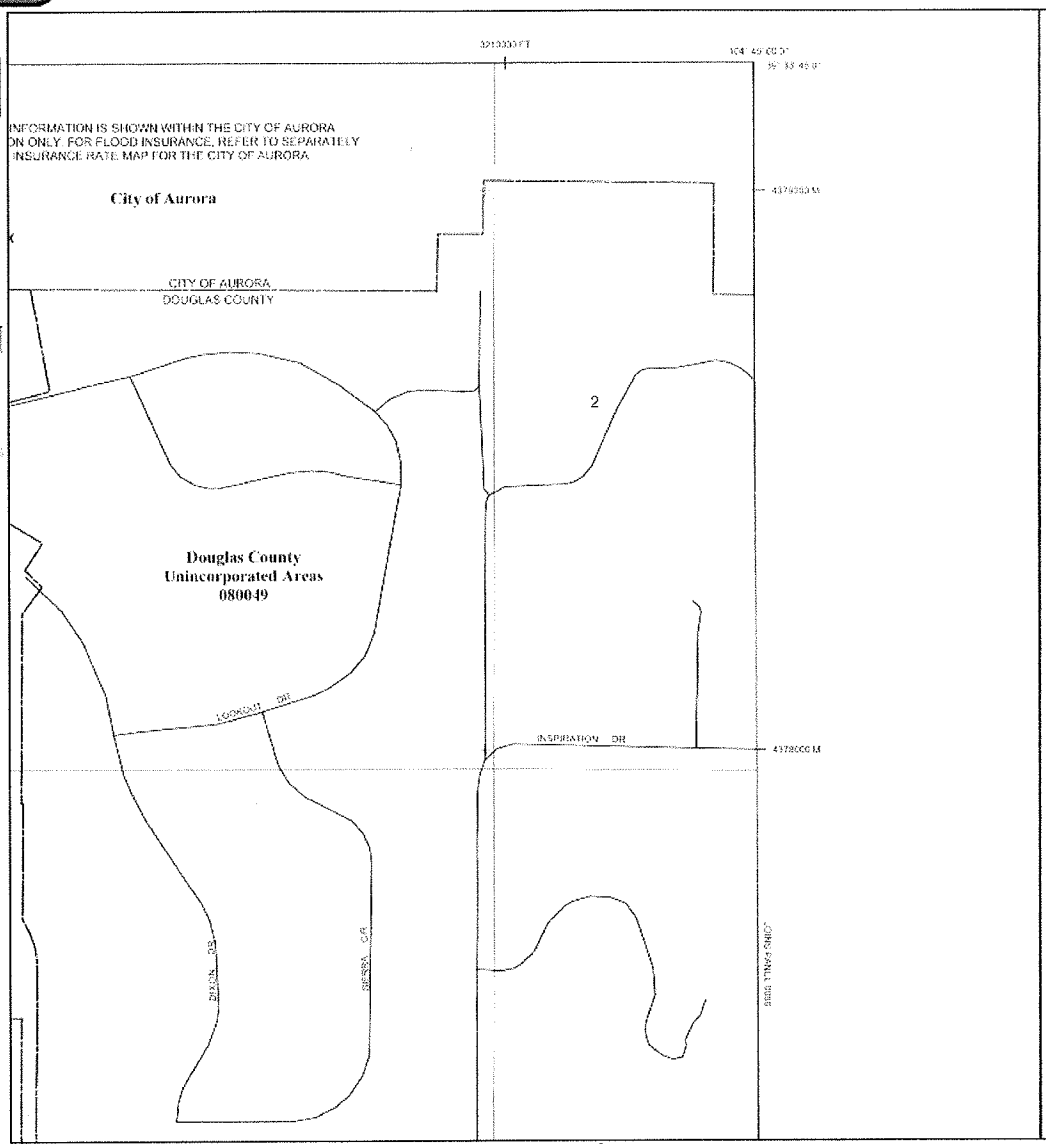

SPECIAL FLOOD HAZARD AREAS (SFHAs) SUBJECT TO INUN
BY THE 1% ANNUAL CHANCE FLOOD

The 1% annual chance flood (100-year flood), also known as the base flood, is the flood that has a 1% chance of being equaled or exceeded in any given year. The Special Flood Hazard Area is the area subject to flooding by the 1% annual chance flood. Areas of Special Flood Hazard include Zones A, AE, AH, AO, AR, A99, or VE.

ZONE A	No Base Flood Elevations determined.
ZONE AE	Base Flood Elevations determined.
ZONE AH	Flood depths of 1 to 3 feet (usually areas of ponding); Base Flood Ele[illegible] determined.
ZONE AO	Flood depths of 1 to 3 feet (usually sheet flow on sloping terrain); [illegible] depths determined. For areas of alluvial fan flooding, velocities also de[illegible]
ZONE AR	Special Flood Hazard Areas formerly protected from the 1% annual ch[illegible] flood by a flood control system that was subsequently decertified. Zone[illegible] indicates that the former flood control system is being restored to pro[illegible] protection from the 1% annual chance or greater flood.
ZONE A99	Area to be protected from 1% annual chance flood by a Federal Flood [illegible] system under construction; no Base Flood Elevations determined.

FLOODWAY AREAS IN ZONE AE

The floodway is the channel of a stream plus any adjacent floodplain areas that must be kept [illegible] encroachment so that the 1% annual chance flood can be carried without substantial incr[illegible] flood heights.

OTHER FLOOD AREAS

ZONE X	Areas of 0.2% annual chance flood; areas of 1% annual chance flo[illegible] average depths of less than 1 foot or with drainage areas less than 1 [illegible] mile; and areas protected by levees from 1% annual chance [illegible]

OTHER AREAS

ZONE X	Areas determined to be outside the 0.2% annual chance floodplain.
ZONE D	Areas in which flood hazards are undetermined, but possible.

	Floodplain boundary
	Floodway boundary
	Zone D boundary
	Boundary dividing Special Flood Hazard Area zones and boundary dividing Special Flood Hazard Areas of different Flood Elevations, Flood depths or Flood velocities.
513	Base Flood Elevation line and value; elevation in feet*
(EL 987)	Base Flood Elevation value where uniform within zone; elevation in feet*

*Referenced to the North American Vertical Datum of 1988

A — A	Cross section line
104° 00' 32.6" , 39° 50' 00"	Geographic coordinates referenced to the North American Datum of 1983 (NAD 83), Western Hemisphere
4279000 M	1000-meter Universal Transverse Mercator grid ticks, zone [illegible]
3180000 FT	5000-foot ticks: Colorado State Plane coordinate system, central zone (FIPSZONE 0502), Lambert Conformal Conic projection
x KK6400	National Geodetic Survey bench mark (see explanation in Selected Items section of this FIRM panel)

MAP REPOSITORY
Refer to listing of Map Repositories on Map Index

EFFECTIVE DATE OF COUNTYWIDE
FLOOD INSURANCE RATE MAP
SEPTEMBER 30, 2005

EFFECTIVE DATE(S) OF REVISION(S) TO THIS PANEL

A.3

United States Department of Agriculture

NRCS

Natural Resources Conservation Service

A product of the National Cooperative Soil Survey, a joint effort of the United States Department of Agriculture and other Federal agencies, State agencies including the Agricultural Experiment Stations, and local participants

Custom Soil Resource Report for Castle Rock Area, Colorado

Boondocks

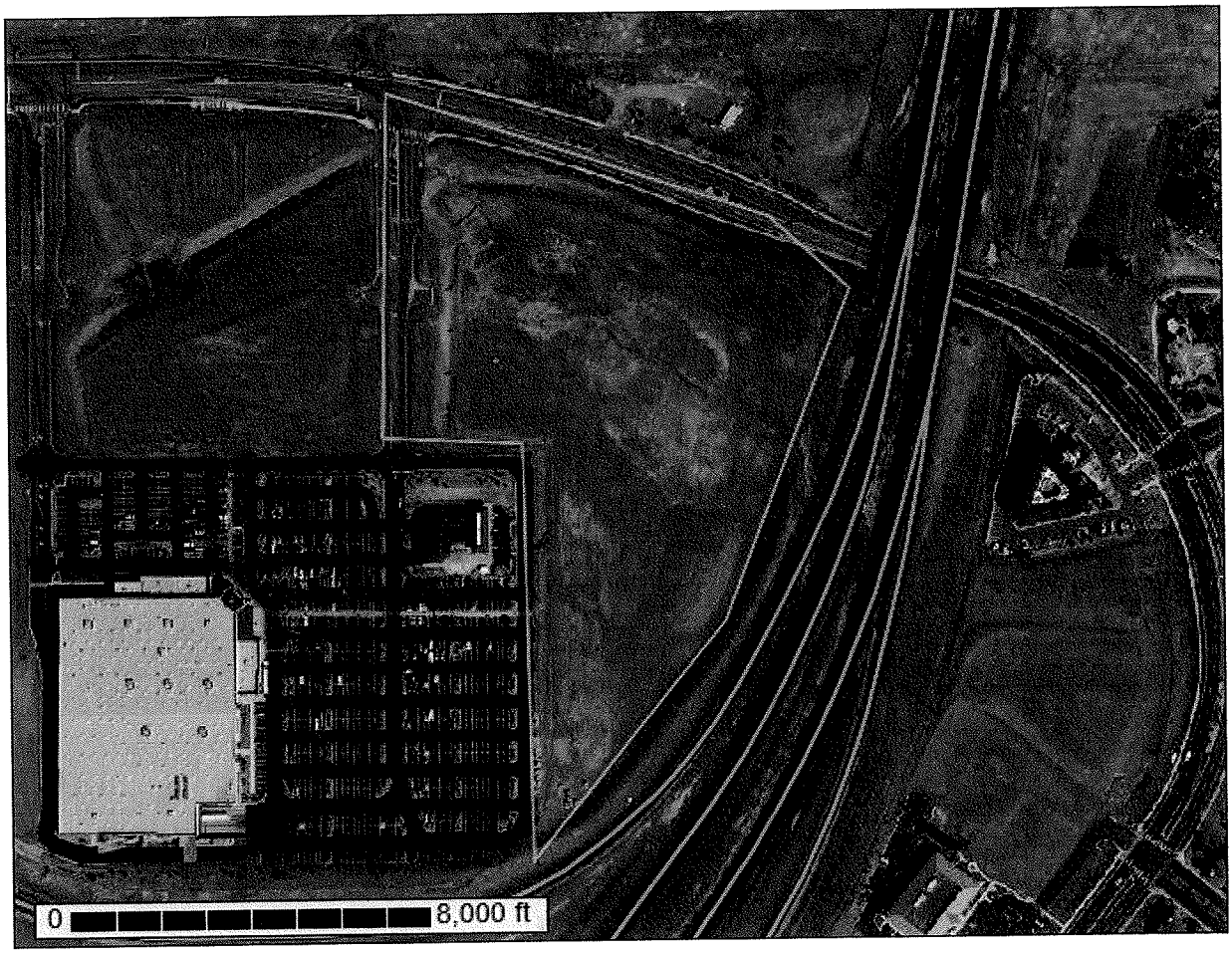

July 30, 2014

A-4

Preface

Soil surveys contain information that affects land use planning in survey areas. They highlight soil limitations that affect various land uses and provide information about the properties of the soils in the survey areas. Soil surveys are designed for many different users, including farmers, ranchers, foresters, agronomists, urban planners, community officials, engineers, developers, builders, and home buyers. Also, conservationists, teachers, students, and specialists in recreation, waste disposal, and pollution control can use the surveys to help them understand, protect, or enhance the environment.

Various land use regulations of Federal, State, and local governments may impose special restrictions on land use or land treatment. Soil surveys identify soil properties that are used in making various land use or land treatment decisions. The information is intended to help the land users identify and reduce the effects of soil limitations on various land uses. The landowner or user is responsible for identifying and complying with existing laws and regulations.

Although soil survey information can be used for general farm, local, and wider area planning, onsite investigation is needed to supplement this information in some cases. Examples include soil quality assessments (http://www.nrcs.usda.gov/wps/portal/nrcs/main/soils/health/) and certain conservation and engineering applications. For more detailed information, contact your local USDA Service Center (http://offices.sc.egov.usda.gov/locator/app?agency=nrcs) or your NRCS State Soil Scientist (http://www.nrcs.usda.gov/wps/portal/nrcs/detail/soils/contactus/?cid=nrcs142p2_053951).

Great differences in soil properties can occur within short distances. Some soils are seasonally wet or subject to flooding. Some are too unstable to be used as a foundation for buildings or roads. Clayey or wet soils are poorly suited to use as septic tank absorption fields. A high water table makes a soil poorly suited to basements or underground installations.

The National Cooperative Soil Survey is a joint effort of the United States Department of Agriculture and other Federal agencies, State agencies including the Agricultural Experiment Stations, and local agencies. The Natural Resources Conservation Service (NRCS) has leadership for the Federal part of the National Cooperative Soil Survey.

Information about soils is updated periodically. Updated information is available through the NRCS Web Soil Survey, the site for official soil survey information.

The U.S. Department of Agriculture (USDA) prohibits discrimination in all its programs and activities on the basis of race, color, national origin, age, disability, and where applicable, sex, marital status, familial status, parental status, religion, sexual orientation, genetic information, political beliefs, reprisal, or because all or a part of an individual's income is derived from any public assistance program. (Not all prohibited bases apply to all programs.) Persons with disabilities who require alternative means

A.5

for communication of program information (Braille, large print, audiotape, etc.) should contact USDA's TARGET Center at (202) 720-2600 (voice and TDD). To file a complaint of discrimination, write to USDA, Director, Office of Civil Rights, 1400 Independence Avenue, S.W., Washington, D.C. 20250-9410 or call (800) 795-3272 (voice) or (202) 720-6382 (TDD). USDA is an equal opportunity provider and employer.

A.6

Contents

Preface.....2
How Soil Surveys Are Made.....5
Soil Map.....7
Soil Map.....8
Legend.....9
Map Unit Legend.....10
Map Unit Descriptions.....10
Castle Rock Area, Colorado.....12
BrD—Bresser sandy loam, 3 to 9 percent slopes.....12
BtE—Bresser-Truckton sandy loams, 5 to 25 percent slopes.....13
Ma—Manzanola clay loam.....14
Sa—Sampson loam.....16
References.....18

A.7

How Soil Surveys Are Made

Soil surveys are made to provide information about the soils and miscellaneous areas in a specific area. They include a description of the soils and miscellaneous areas and their location on the landscape and tables that show soil properties and limitations affecting various uses. Soil scientists observed the steepness, length, and shape of the slopes; the general pattern of drainage; the kinds of crops and native plants; and the kinds of bedrock. They observed and described many soil profiles. A soil profile is the sequence of natural layers, or horizons, in a soil. The profile extends from the surface down into the unconsolidated material in which the soil formed or from the surface down to bedrock. The unconsolidated material is devoid of roots and other living organisms and has not been changed by other biological activity.

Currently, soils are mapped according to the boundaries of major land resource areas (MLRAs). MLRAs are geographically associated land resource units that share common characteristics related to physiography, geology, climate, water resources, soils, biological resources, and land uses (USDA, 2006). Soil survey areas typically consist of parts of one or more MLRA.

The soils and miscellaneous areas in a survey area occur in an orderly pattern that is related to the geology, landforms, relief, climate, and natural vegetation of the area. Each kind of soil and miscellaneous area is associated with a particular kind of landform or with a segment of the landform. By observing the soils and miscellaneous areas in the survey area and relating their position to specific segments of the landform, a soil scientist develops a concept, or model, of how they were formed. Thus, during mapping, this model enables the soil scientist to predict with a considerable degree of accuracy the kind of soil or miscellaneous area at a specific location on the landscape.

Commonly, individual soils on the landscape merge into one another as their characteristics gradually change. To construct an accurate soil map, however, soil scientists must determine the boundaries between the soils. They can observe only a limited number of soil profiles. Nevertheless, these observations, supplemented by an understanding of the soil-vegetation-landscape relationship, are sufficient to verify predictions of the kinds of soil in an area and to determine the boundaries.

Soil scientists recorded the characteristics of the soil profiles that they studied. They noted soil color, texture, size and shape of soil aggregates, kind and amount of rock fragments, distribution of plant roots, reaction, and other features that enable them to identify soils. After describing the soils in the survey area and determining their properties, the soil scientists assigned the soils to taxonomic classes (units). Taxonomic classes are concepts. Each taxonomic class has a set of soil characteristics with precisely defined limits. The classes are used as a basis for comparison to classify soils systematically. Soil taxonomy, the system of taxonomic classification used in the United States, is based mainly on the kind and character of soil properties and the arrangement of horizons within the profile. After the soil scientists classified and named the soils in the survey area, they compared the

A.8

individual soils with similar soils in the same taxonomic class in other areas so that they could confirm data and assemble additional data based on experience and research.

The objective of soil mapping is not to delineate pure map unit components; the objective is to separate the landscape into landforms or landform segments that have similar use and management requirements. Each map unit is defined by a unique combination of soil components and/or miscellaneous areas in predictable proportions. Some components may be highly contrasting to the other components of the map unit. The presence of minor components in a map unit in no way diminishes the usefulness or accuracy of the data. The delineation of such landforms and landform segments on the map provides sufficient information for the development of resource plans. If intensive use of small areas is planned, onsite investigation is needed to define and locate the soils and miscellaneous areas.

Soil scientists make many field observations in the process of producing a soil map. The frequency of observation is dependent upon several factors, including scale of mapping, intensity of mapping, design of map units, complexity of the landscape, and experience of the soil scientist. Observations are made to test and refine the soil-landscape model and predictions and to verify the classification of the soils at specific locations. Once the soil-landscape model is refined, a significantly smaller number of measurements of individual soil properties are made and recorded. These measurements may include field measurements, such as those for color, depth to bedrock, and texture, and laboratory measurements, such as those for content of sand, silt, clay, salt, and other components. Properties of each soil typically vary from one point to another across the landscape.

Observations for map unit components are aggregated to develop ranges of characteristics for the components. The aggregated values are presented. Direct measurements do not exist for every property presented for every map unit component. Values for some properties are estimated from combinations of other properties.

While a soil survey is in progress, samples of some of the soils in the area generally are collected for laboratory analyses and for engineering tests. Soil scientists interpret the data from these analyses and tests as well as the field-observed characteristics and the soil properties to determine the expected behavior of the soils under different uses. Interpretations for all of the soils are field tested through observation of the soils in different uses and under different levels of management. Some interpretations are modified to fit local conditions, and some new interpretations are developed to meet local needs. Data are assembled from other sources, such as research information, production records, and field experience of specialists. For example, data on crop yields under defined levels of management are assembled from farm records and from field or plot experiments on the same kinds of soil.

Predictions about soil behavior are based not only on soil properties but also on such variables as climate and biological activity. Soil conditions are predictable over long periods of time, but they are not predictable from year to year. For example, soil scientists can predict with a fairly high degree of accuracy that a given soil will have a high water table within certain depths in most years, but they cannot predict that a high water table will always be at a specific level in the soil on a specific date.

After soil scientists located and identified the significant natural bodies of soil in the survey area, they drew the boundaries of these bodies on aerial photographs and identified each as a specific map unit. Aerial photographs show trees, buildings, fields, roads, and rivers, all of which help in locating boundaries accurately.

A9

Soil Map

The soil map section includes the soil map for the defined area of interest, a list of soil map units on the map and extent of each map unit, and cartographic symbols displayed on the map. Also presented are various metadata about data used to produce the map, and a description of each soil map unit.

A.10

Custom Soil Resource Report
Soil Map

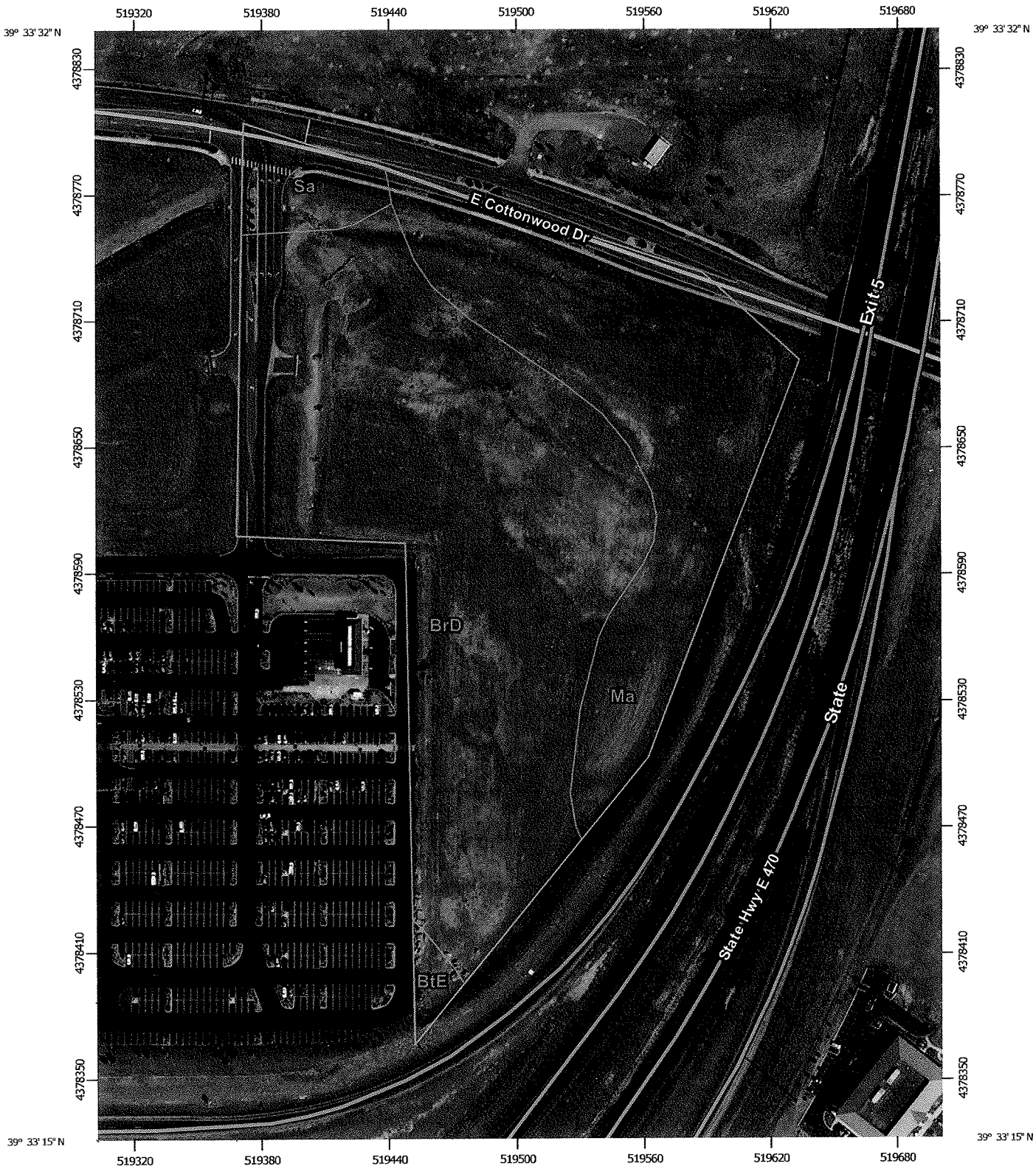

Map Scale: 1:2,570 if printed on A portrait (8.5" x 11") sheet.

N

Meters: 0 35 70 140 210

Feet: 0 100 200 400 600

Map projection: Web Mercator Corner coordinates: WGS84 Edge tics: UTM Zone 13N WGS84

A.11

MAP LEGEND

Area of Interest (AOI)
- Area of Interest (AOI)

Soils
- Soil Map Unit Polygons
- Soil Map Unit Lines
- Soil Map Unit Points

Special Point Features
- Blowout
- Borrow Pit
- Clay Spot
- Closed Depression
- Gravel Pit
- Gravelly Spot
- Landfill
- Lava Flow
- Marsh or swamp
- Mine or Quarry
- Miscellaneous Water
- Perennial Water
- Rock Outcrop
- Saline Spot
- Sandy Spot
- Severely Eroded Spot
- Sinkhole
- Slide or Slip
- Sodic Spot
- Spoil Area
- Stony Spot
- Very Stony Spot
- Wet Spot
- Other
- Special Line Features

Water Features
- Streams and Canals

Transportation
- Rails
- Interstate Highways
- US Routes
- Major Roads
- Local Roads

Background
- Aerial Photography

MAP INFORMATION

The soil surveys that comprise your AOI were mapped at 1:20,000.

Warning: Soil Map may not be valid at this scale.

Enlargement of maps beyond the scale of mapping can cause misunderstanding of the detail of mapping and accuracy of soil line placement. The maps do not show the small areas of contrasting soils that could have been shown at a more detailed scale.

Please rely on the bar scale on each map sheet for map measurements.

Source of Map: Natural Resources Conservation Service
Web Soil Survey URL: http://websoilsurvey.nrcs.usda.gov
Coordinate System: Web Mercator (EPSG:3857)

Maps from the Web Soil Survey are based on the Web Mercator projection, which preserves direction and shape but distorts distance and area. A projection that preserves area, such as the Albers equal-area conic projection, should be used if more accurate calculations of distance or area are required.

This product is generated from the USDA-NRCS certified data as of the version date(s) listed below.

Soil Survey Area: Castle Rock Area, Colorado
Survey Area Data: Version 7, Dec 23, 2013

Soil map units are labeled (as space allows) for map scales 1:50,000 or larger.

Date(s) aerial images were photographed: Mar 16, 2012—Apr 13, 2012

The orthophoto or other base map on which the soil lines were compiled and digitized probably differs from the background imagery displayed on these maps. As a result, some minor shifting of map unit boundaries may be evident.

A.12

Map Unit Legend

Castle Rock Area, Colorado (CO622)			
Map Unit Symbol	**Map Unit Name**	**Acres in AOI**	**Percent of AOI**
BrD	Bresser sandy loam, 3 to 9 percent slopes	9.2	61.7%
BtE	Bresser-Truckton sandy loams, 5 to 25 percent slopes	0.2	1.2%
Ma	Manzanola clay loam	4.9	32.7%
Sa	Sampson loam	0.7	4.4%
Totals for Area of Interest		**15.0**	**100.0%**

Map Unit Descriptions

The map units delineated on the detailed soil maps in a soil survey represent the soils or miscellaneous areas in the survey area. The map unit descriptions, along with the maps, can be used to determine the composition and properties of a unit.

A map unit delineation on a soil map represents an area dominated by one or more major kinds of soil or miscellaneous areas. A map unit is identified and named according to the taxonomic classification of the dominant soils. Within a taxonomic class there are precisely defined limits for the properties of the soils. On the landscape, however, the soils are natural phenomena, and they have the characteristic variability of all natural phenomena. Thus, the range of some observed properties may extend beyond the limits defined for a taxonomic class. Areas of soils of a single taxonomic class rarely, if ever, can be mapped without including areas of other taxonomic classes. Consequently, every map unit is made up of the soils or miscellaneous areas for which it is named and some minor components that belong to taxonomic classes other than those of the major soils.

Most minor soils have properties similar to those of the dominant soil or soils in the map unit, and thus they do not affect use and management. These are called noncontrasting, or similar, components. They may or may not be mentioned in a particular map unit description. Other minor components, however, have properties and behavioral characteristics divergent enough to affect use or to require different management. These are called contrasting, or dissimilar, components. They generally are in small areas and could not be mapped separately because of the scale used. Some small areas of strongly contrasting soils or miscellaneous areas are identified by a special symbol on the maps. If included in the database for a given area, the contrasting minor components are identified in the map unit descriptions along with some characteristics of each. A few areas of minor components may not have been observed, and consequently they are not mentioned in the descriptions, especially where the pattern was so complex that it was impractical to make enough observations to identify all the soils and miscellaneous areas on the landscape.

The presence of minor components in a map unit in no way diminishes the usefulness or accuracy of the data. The objective of mapping is not to delineate pure taxonomic classes but rather to separate the landscape into landforms or landform segments that

A.13

have similar use and management requirements. The delineation of such segments on the map provides sufficient information for the development of resource plans. If intensive use of small areas is planned, however, onsite investigation is needed to define and locate the soils and miscellaneous areas.

An identifying symbol precedes the map unit name in the map unit descriptions. Each description includes general facts about the unit and gives important soil properties and qualities.

Soils that have profiles that are almost alike make up a *soil series.* Except for differences in texture of the surface layer, all the soils of a series have major horizons that are similar in composition, thickness, and arrangement.

Soils of one series can differ in texture of the surface layer, slope, stoniness, salinity, degree of erosion, and other characteristics that affect their use. On the basis of such differences, a soil series is divided into *soil phases.* Most of the areas shown on the detailed soil maps are phases of soil series. The name of a soil phase commonly indicates a feature that affects use or management. For example, Alpha silt loam, 0 to 2 percent slopes, is a phase of the Alpha series.

Some map units are made up of two or more major soils or miscellaneous areas. These map units are complexes, associations, or undifferentiated groups.

A *complex* consists of two or more soils or miscellaneous areas in such an intricate pattern or in such small areas that they cannot be shown separately on the maps. The pattern and proportion of the soils or miscellaneous areas are somewhat similar in all areas. Alpha-Beta complex, 0 to 6 percent slopes, is an example.

An *association* is made up of two or more geographically associated soils or miscellaneous areas that are shown as one unit on the maps. Because of present or anticipated uses of the map units in the survey area, it was not considered practical or necessary to map the soils or miscellaneous areas separately. The pattern and relative proportion of the soils or miscellaneous areas are somewhat similar. Alpha-Beta association, 0 to 2 percent slopes, is an example.

An *undifferentiated group* is made up of two or more soils or miscellaneous areas that could be mapped individually but are mapped as one unit because similar interpretations can be made for use and management. The pattern and proportion of the soils or miscellaneous areas in a mapped area are not uniform. An area can be made up of only one of the major soils or miscellaneous areas, or it can be made up of all of them. Alpha and Beta soils, 0 to 2 percent slopes, is an example.

Some surveys include *miscellaneous areas.* Such areas have little or no soil material and support little or no vegetation. Rock outcrop is an example.

A.14

Castle Rock Area, Colorado

BrD—Bresser sandy loam, 3 to 9 percent slopes

Map Unit Setting

Elevation: 5,500 to 6,600 feet
Mean annual precipitation: 15 to 19 inches
Mean annual air temperature: 47 to 52 degrees F
Frost-free period: 120 to 135 days

Map Unit Composition

Bresser and similar soils: 85 percent
Minor components: 15 percent

Description of Bresser

Setting

Landform: Hills, ridges
Landform position (three-dimensional): Side slope, crest, base slope
Down-slope shape: Linear
Across-slope shape: Linear
Parent material: Sandy eolian deposits

Typical profile

H1 - 0 to 8 inches: sandy loam
H2 - 8 to 30 inches: sandy clay loam
H3 - 30 to 60 inches: loamy sand

Properties and qualities

Slope: 3 to 9 percent
Depth to restrictive feature: More than 80 inches
Natural drainage class: Well drained
Capacity of the most limiting layer to transmit water (Ksat): Moderately high to high (0.20 to 2.00 in/hr)
Depth to water table: More than 80 inches
Frequency of flooding: None
Frequency of ponding: None
Available water storage in profile: Moderate (about 7.6 inches)

Interpretive groups

Farmland classification: Not prime farmland
Land capability classification (irrigated): 4e
Land capability classification (nonirrigated): 4e
Hydrologic Soil Group: B
Ecological site: Sandy Foothill (R049BY210CO)

Minor Components

Truckton

Percent of map unit: 5 percent

Bresser

Percent of map unit: 5 percent

Loamy alluvial land

Percent of map unit: 4 percent

A.15

Aquic haplustolls
Percent of map unit: 1 percent
Landform: Swales

BtE—Bresser-Truckton sandy loams, 5 to 25 percent slopes

Map Unit Setting
Elevation: 5,500 to 6,600 feet
Mean annual precipitation: 15 to 19 inches
Mean annual air temperature: 47 to 52 degrees F
Frost-free period: 120 to 135 days

Map Unit Composition
Bresser and similar soils: 50 percent
Truckton and similar soils: 35 percent
Minor components: 15 percent

Description of Bresser

Setting
Landform: Terraces
Landform position (three-dimensional): Tread, riser
Down-slope shape: Linear
Across-slope shape: Linear
Parent material: Sandy eolian deposits

Typical profile
H1 - 0 to 8 inches: sandy loam
H2 - 8 to 30 inches: sandy clay loam
H3 - 30 to 60 inches: loamy sand

Properties and qualities
Slope: 5 to 15 percent
Depth to restrictive feature: More than 80 inches
Natural drainage class: Well drained
Capacity of the most limiting layer to transmit water (Ksat): Moderately high to high (0.20 to 2.00 in/hr)
Depth to water table: More than 80 inches
Frequency of flooding: None
Frequency of ponding: None
Available water storage in profile: Moderate (about 7.6 inches)

Interpretive groups
Farmland classification: Not prime farmland
Land capability classification (irrigated): None specified
Land capability classification (nonirrigated): 6e
Hydrologic Soil Group: B
Ecological site: Sandy Foothill (R049BY210CO)

A.16

Description of Truckton

Setting

Landform: Terraces
Landform position (three-dimensional): Tread, riser
Down-slope shape: Linear
Across-slope shape: Linear
Parent material: Alluvium derived from arkosic sedimentary rock

Typical profile

H1 - 0 to 4 inches: sandy loam
H2 - 4 to 19 inches: sandy loam
H3 - 19 to 60 inches: sandy loam

Properties and qualities

Slope: 10 to 25 percent
Depth to restrictive feature: More than 80 inches
Natural drainage class: Well drained
Capacity of the most limiting layer to transmit water (Ksat): High (2.00 to 6.00 in/hr)
Depth to water table: More than 80 inches
Frequency of flooding: None
Frequency of ponding: None
Available water storage in profile: Low (about 6.0 inches)

Interpretive groups

Farmland classification: Not prime farmland
Land capability classification (irrigated): None specified
Land capability classification (nonirrigated): 6e
Hydrologic Soil Group: B

Minor Components

Newlin

Percent of map unit: 5 percent

Blakeland

Percent of map unit: 5 percent

Stapleton

Percent of map unit: 4 percent

Aquic haplustolls

Percent of map unit: 1 percent
Landform: Swales

Ma—Manzanola clay loam

Map Unit Setting

Elevation: 5,500 to 6,200 feet
Mean annual precipitation: 15 to 17 inches
Mean annual air temperature: 49 to 54 degrees F

A-17

Frost-free period: 120 to 135 days

Map Unit Composition

Manzanola and similar soils: 85 percent
Minor components: 15 percent

Description of Manzanola

Setting

Landform: Mesas, plateaus
Down-slope shape: Linear
Across-slope shape: Linear
Parent material: Alluvium derived from sedimentary rock and/or eolian deposits

Typical profile

H1 - 0 to 8 inches: clay loam
H2 - 8 to 42 inches: clay loam
H3 - 42 to 60 inches: clay loam

Properties and qualities

Slope: 3 to 6 percent
Depth to restrictive feature: More than 80 inches
Natural drainage class: Well drained
Capacity of the most limiting layer to transmit water (Ksat): Moderately low to moderately high (0.06 to 0.20 in/hr)
Depth to water table: More than 80 inches
Frequency of flooding: None
Frequency of ponding: None
Calcium carbonate, maximum in profile: 25 percent
Gypsum, maximum in profile: 2 percent
Salinity, maximum in profile: Nonsaline to slightly saline (2.0 to 8.0 mmhos/cm)
Available water storage in profile: High (about 10.7 inches)

Interpretive groups

Farmland classification: Not prime farmland
Land capability classification (irrigated): None specified
Land capability classification (nonirrigated): 4e
Hydrologic Soil Group: C
Ecological site: Clayey Foothill (R049BY208CO)

Minor Components

Renohill

Percent of map unit: 5 percent

Satanta

Percent of map unit: 3 percent

Buick

Percent of map unit: 3 percent

Fondis

Percent of map unit: 2 percent

Newlin

Percent of map unit: 2 percent

A.18

Sa—Sampson loam

Map Unit Setting

Elevation: 5,500 to 6,600 feet
Mean annual precipitation: 15 to 19 inches
Mean annual air temperature: 48 to 50 degrees F
Frost-free period: 120 to 135 days

Map Unit Composition

Sampson and similar soils: 80 percent
Minor components: 20 percent

Description of Sampson

Setting

Landform: Stream terraces on drainageways
Landform position (three-dimensional): Tread
Down-slope shape: Linear
Across-slope shape: Linear
Parent material: Weathered alluvium derived from arkose

Typical profile

H1 - 0 to 9 inches: loam
H2 - 9 to 28 inches: clay loam
H3 - 28 to 38 inches: loam
H4 - 38 to 60 inches: silt loam

Properties and qualities

Slope: 1 to 4 percent
Depth to restrictive feature: More than 80 inches
Natural drainage class: Well drained
Capacity of the most limiting layer to transmit water (Ksat): Moderately high to high (0.60 to 2.00 in/hr)
Depth to water table: More than 80 inches
Frequency of flooding: None
Frequency of ponding: None
Calcium carbonate, maximum in profile: 15 percent
Salinity, maximum in profile: Nonsaline (0.0 to 2.0 mmhos/cm)
Available water storage in profile: High (about 9.5 inches)

Interpretive groups

Farmland classification: Farmland of statewide importance
Land capability classification (irrigated): 3e
Land capability classification (nonirrigated): 3c
Hydrologic Soil Group: B
Ecological site: Loamy Foothill (R049BY202CO)

A.19

Minor Components

Englewood
Percent of map unit: 8 percent

Bresser
Percent of map unit: 7 percent

Loamy alluvial land
Percent of map unit: 4 percent

Aquic haplustolls
Percent of map unit: 1 percent
Landform: Swales

A.20

References

American Association of State Highway and Transportation Officials (AASHTO). 2004. Standard specifications for transportation materials and methods of sampling and testing. 24th edition.

American Society for Testing and Materials (ASTM). 2005. Standard classification of soils for engineering purposes. ASTM Standard D2487-00.

Cowardin, L.M., V. Carter, F.C. Golet, and E.T. LaRoe. 1979. Classification of wetlands and deep-water habitats of the United States. U.S. Fish and Wildlife Service FWS/OBS-79/31.

Federal Register. July 13, 1994. Changes in hydric soils of the United States.

Federal Register. September 18, 2002. Hydric soils of the United States.

Hurt, G.W., and L.M. Vasilas, editors. Version 6.0, 2006. Field indicators of hydric soils in the United States.

National Research Council. 1995. Wetlands: Characteristics and boundaries.

Soil Survey Division Staff. 1993. Soil survey manual. Soil Conservation Service. U.S. Department of Agriculture Handbook 18. http://www.nrcs.usda.gov/wps/portal/nrcs/detail/national/soils/?cid=nrcs142p2_054262

Soil Survey Staff. 1999. Soil taxonomy: A basic system of soil classification for making and interpreting soil surveys. 2nd edition. Natural Resources Conservation Service, U.S. Department of Agriculture Handbook 436. http://www.nrcs.usda.gov/wps/portal/nrcs/detail/national/soils/?cid=nrcs142p2_053577

Soil Survey Staff. 2010. Keys to soil taxonomy. 11th edition. U.S. Department of Agriculture, Natural Resources Conservation Service. http://www.nrcs.usda.gov/wps/portal/nrcs/detail/national/soils/?cid=nrcs142p2_053580

Tiner, R.W., Jr. 1985. Wetlands of Delaware. U.S. Fish and Wildlife Service and Delaware Department of Natural Resources and Environmental Control, Wetlands Section.

United States Army Corps of Engineers, Environmental Laboratory. 1987. Corps of Engineers wetlands delineation manual. Waterways Experiment Station Technical Report Y-87-1.

United States Department of Agriculture, Natural Resources Conservation Service. National forestry manual. http://www.nrcs.usda.gov/wps/portal/nrcs/detail/soils/home/?cid=nrcs142p2_053374

United States Department of Agriculture, Natural Resources Conservation Service. National range and pasture handbook. http://www.nrcs.usda.gov/wps/portal/nrcs/detail/national/landuse/rangepasture/?cid=stelprdb1043084

A.21

United States Department of Agriculture, Natural Resources Conservation Service. National soil survey handbook, title 430-VI. http://www.nrcs.usda.gov/wps/portal/nrcs/detail/soils/scientists/?cid=nrcs142p2_054242

United States Department of Agriculture, Natural Resources Conservation Service. 2006. Land resource regions and major land resource areas of the United States, the Caribbean, and the Pacific Basin. U.S. Department of Agriculture Handbook 296. http://www.nrcs.usda.gov/wps/portal/nrcs/detail/national/soils/?cid=nrcs142p2_053624

United States Department of Agriculture, Soil Conservation Service. 1961. Land capability classification. U.S. Department of Agriculture Handbook 210. http://www.nrcs.usda.gov/Internet/FSE_DOCUMENTS/nrcs142p2_052290.pdf

A.22

APPENDIX B

Hydrologic Calculations

Table RO-3—Recommended Percentage Imperviousness Values

Land Use or Surface Characteristics	Percentage Imperviousness
Business:	
Commercial areas	95
Neighborhood areas	85
Residential:	
Single-family	*
Multi-unit (detached)	60
Multi-unit (attached)	75
Half-acre lot or larger	*
Apartments	80
Industrial:	
Light areas	80
Heavy areas	90
Parks, cemeteries	5
Playgrounds	10
Schools	50
Railroad yard areas	15
Undeveloped Areas:	
Historic flow analysis	2
Greenbelts, agricultural	2
Off-site flow analysis (when land use not defined)	45
Streets:	
Paved	100
Gravel (packed)	40
Drive and walks	90
Roofs	90
Lawns, sandy soil	0
Lawns, clayey soil	0

* See Figures RO-3 through RO-5 for percentage imperviousness.

$$C_A = K_A + \left(1.31i^3 - 1.44i^2 + 1.135i - 0.12\right) \text{ for } C_A \geq 0\text{, otherwise } C_A = 0 \qquad \text{(RO-6)}$$

$$C_{CD} = K_{CD} + \left(0.858i^3 - 0.786i^2 + 0.774i + 0.04\right) \qquad \text{(RO-7)}$$

$$C_B = \left(C_A + C_{CD}\right)/2$$

Boondoks and Commercial Area

Weighted I Values - Developed Values

Soil Types: Bresser Sandy Loam and Sampson Loam
All Hydrologic Group B
10/14/14

Typical I Values	Imperviousness
Building roof	90
Parking Lots, Walks	90
Landscaping	5

Basin Number	Building Roof (sf)	Parking Lots, Walks (sf)	Landscape (sf)	Total Area (sf)	Weighted Imperviousness	Total Area (ac)
A.1	0	2500	33500	36000	11	0.50
A.2	2000	16250	37250	55500	33	1.27
A.3	17500	30000	52250	99750	45	2.29
A.4	8000	10000	3250	21250	77	0.49
A.5	1000	11500	0	12500	90	0.29
A.6	8000	25250	0	33250	90	0.76
A.7	0	10750	0	10750	90	0.25
A.8	11500	6750	6750	25000	67	0.57
A.9	35000	3000	3000	41000	84	0.94
A.10	1000	2500	2750	6250	53	0.14
A.11	0	7750	8250	16000	46	0.37
A.12	9650	17000	0	26650	90	0.61
A.13	9000	16500	0	25500	90	0.59
A.14	0	7750	3500	11250	64	0.26
A.15	3000	14500	2500	20000	79	0.46
A.16	0	8000	0	8000	90	0.18
A.17	0	10750	0	10750	90	0.25
A.18	0	24000	0	24000	90	0.55
A.19	0	17500	0	17500	90	0.40
A.20	2750	16250	0	19000	90	0.44
A.21	3250	48250	0	51500	90	1.18
B.1	3900	4850	15500	24250	36	0.56
B.2	7000	32000	17500	56500	64	1.30
B.3	3500	25500	3000	32000	82	0.73
B.4	0	17250	13750	31000	52	0.71
Total Basins	126050	386350	202750	715150	66	16.09

Table RO-5— Runoff Coefficients, *C*

Percentage Imperviousness	Type C and D NRCS Hydrologic Soil Groups					
	2-yr	5-yr	10-yr	25-yr	50-yr	100-yr
0%	0.04	0.15	0.25	0.37	0.44	0.50
5%	0.08	0.18	0.28	0.39	0.46	0.52
10%	0.11	0.21	0.30	0.41	0.47	0.53
15%	0.14	0.24	0.32	0.43	0.49	0.54
20%	0.17	0.26	0.34	0.44	0.50	0.55
25%	0.20	0.28	0.36	0.46	0.51	0.56
30%	0.22	0.30	0.38	0.47	0.52	0.57
35%	0.25	0.33	0.40	0.48	0.53	0.57
40%	0.28	0.35	0.42	0.50	0.54	0.58
45%	0.31	0.37	0.44	0.51	0.55	0.59
50%	0.34	0.40	0.46	0.53	0.57	0.60
55%	0.37	0.43	0.48	0.55	0.58	0.62
60%	0.41	0.46	0.51	0.57	0.60	0.63
65%	0.45	0.49	0.54	0.59	0.62	0.65
70%	0.49	0.53	0.57	0.62	0.65	0.68
75%	0.54	0.58	0.62	0.66	0.68	0.71
80%	0.60	0.63	0.66	0.70	0.72	0.74
85%	0.66	0.68	0.71	0.75	0.77	0.79
90%	0.73	0.75	0.77	0.80	0.82	0.83
95%	0.80	0.82	0.84	0.87	0.88	0.89
100%	0.89	0.90	0.92	0.94	0.95	0.96
	TYPE B NRCS HYDROLOGIC SOILS GROUP					
0%	0.02	0.08	0.15	0.25	0.30	0.35
5%	0.04	0.10	0.19	0.28	0.33	0.38
10%	0.06	0.14	0.22	0.31	0.36	0.40
15%	0.08	0.17	0.25	0.33	0.38	0.42
20%	0.12	0.20	0.27	0.35	0.40	0.44
25%	0.15	0.22	0.30	0.37	0.41	0.46
30%	0.18	0.25	0.32	0.39	0.43	0.47
35%	0.20	0.27	0.34	0.41	0.44	0.48
40%	0.23	0.30	0.36	0.42	0.46	0.50
45%	0.26	0.32	0.38	0.44	0.48	0.51
50%	0.29	0.35	0.40	0.46	0.49	0.52
55%	0.33	0.38	0.43	0.48	0.51	0.54
60%	0.37	0.41	0.46	0.51	0.54	0.56
65%	0.41	0.45	0.49	0.54	0.57	0.59
70%	0.45	0.49	0.53	0.58	0.60	0.62
75%	0.51	0.54	0.58	0.62	0.64	0.66
80%	0.57	0.59	0.63	0.66	0.68	0.70
85%	0.63	0.66	0.69	0.72	0.73	0.75
90%	0.71	0.73	0.75	0.78	0.80	0.81
95%	0.79	0.81	0.83	0.85	0.87	0.88
100%	0.89	0.90	0.92	0.94	0.95	0.96

TABLE RO-5 (Continued)—Runoff Coefficients, *C*

Percentage Imperviousness	Type A NRCS Hydrologic Soils Group					
	2-yr	5-yr	10-yr	25-yr	50-yr	100-yr
0%	0.00	0.00	0.05	0.12	0.16	0.20
5%	0.00	0.02	0.10	0.16	0.20	0.24
10%	0.00	0.06	0.14	0.20	0.24	0.28
15%	0.02	0.10	0.17	0.23	0.27	0.30
20%	0.06	0.13	0.20	0.26	0.30	0.33
25%	0.09	0.16	0.23	0.29	0.32	0.35
30%	0.13	0.19	0.25	0.31	0.34	0.37
35%	0.16	0.22	0.28	0.33	0.36	0.39
40%	0.19	0.25	0.30	0.35	0.38	0.41
45%	0.22	0.27	0.33	0.37	0.40	0.43
50%	0.25	0.30	0.35	0.40	0.42	0.45
55%	0.29	0.33	0.38	0.42	0.45	0.47
60%	0.33	0.37	0.41	0.45	0.47	0.50
65%	0.37	0.41	0.45	0.49	0.51	0.53
70%	0.42	0.45	0.49	0.53	0.54	0.56
75%	0.47	0.50	0.54	0.57	0.59	0.61
80%	0.54	0.56	0.60	0.63	0.64	0.66
85%	0.61	0.63	0.66	0.69	0.70	0.72
90%	0.69	0.71	0.73	0.76	0.77	0.79
95%	0.78	0.80	0.82	0.84	0.85	0.86
100%	0.89	0.90	0.92	0.94	0.95	0.96

Boondocks & Commercial

10/14/14

Weighted C Values

Soil Types Bresser Sandy Loam and Sampson Loam
All Hydrologic Group B

Basin Number	Total Area (ac)	Percent Imperviousness	5 year	100 year
A.1	0.50	11	0.14	0.40
A.2	1.27	33	0.26	0.48
A.3	2.29	45	0.32	0.51
A.4	0.49	77	0.56	0.68
A.5	0.29	90	0.73	0.81
A.6	0.76	90	0.73	0.81
A.7	0.25	90	0.73	0.81
A.8	0.57	67	0.47	0.60
A.9	0.94	84	0.64	0.74
A.10	0.14	53	0.37	0.53
A.11	0.37	46	0.32	0.51
A.12	0.61	90	0.73	0.81
A.13	0.59	90	0.73	0.81
A.14	0.26	64	0.45	0.63
A.15	0.46	79	0.44	0.59
A.16	0.18	90	0.73	0.81
A.17	0.25	90	0.73	0.81
A.18	0.55	90	0.73	0.81
A.19	0.40	90	0.73	0.81
A.20	0.44	90	0.73	0.81
A.21	1.18	90	0.73	0.81
B.1	0.56	36	0.28	0.48
B.2	1.30	64	0.45	0.63
B.3	0.73	82	0.45	0.63
B.4	0.71	52	0.36	0.53
Total	16.09			

Boondocks & Commercial Area
Summary Runoff Table
10/29/14

Basin ID	DP	Contributing Area (acres)	Percent Imperv. %	Runoff Coefficie C (5 yr)	C (100 yr)	Routed Flows 5 yr cfs	100 yr cfs	Comments
A.1	1	0.50	11	0.14	0.40	0.3	1.3	
A.2	2	1.27	33	0.26	0.48	1.25	4.0	
A.3	3	2.29	45	0.32	0.51	3.0	8.9	
A.4	4	0.49	77	0.58	0.68	1.3	2.9	
A.5	5	0.29	90	0.73	0.81	1.0	2.1	
A.6	6	0.76	90	0.73	0.81	2.6	5.4	
A.7	7	0.25	90	0.73	0.81	0.9	1.8	
A.8	8	0.57	67	0.47	0.6	1.3	3	
A.9	9	0.94	84	0.64	0.74	2.2	4.8	
A.10	10	0.14	53	0.37	0.53	0.2	0.7	
A.11	11	0.37	45	0.32	0.51	0.6	1.7	
A.12	12	0.61	90	0.73	0.81	2.1	4.4	
A.13	13	0.59	90	0.73	0.81	2.0	4.2	
A.14	14	0.26	64	0.45	0.63	0.6	1.4	
A.15		0.46	79	0.44	0.59	1.0	2.5	
Sum A.14+A.15	15	0.72				1.5	3.7	
A.16		0.18	90	0.73	0.81	0.6	1.3	
A.17		0.25	90	0.73	0.81	0.9	1.8	
Sum A.16+A.17	16	0.43				1.4	2.9	
A.18	17	0.55	90	0.73	0.81	1.9	3.9	
A.19	18	0.40	90	0.73	0.81	1.4	2.9	
A.20	19	0.44	90	0.73	0.81	1.5	3.1	
A.21	20	1.18	90	0.73	0.81	4.1	8.4	
B.1	21	0.56	36	0.28	0.48	0.7	2.3	
B.2		1.30	64	0.45	0.63	2.3	6	
Sum B.1+B.2	22	1.86				2.8	7.5	
B.3	23	0.73	82	0.45	0.63	1.4	3.7	
B.4		0.71	52	0.36	0.63	1.2	3.9	
Sum B.3+B.4	24	1.44				2.3	6.5	
Sum B.1-B.4	25	0.14				2.2	13.8	

B.4

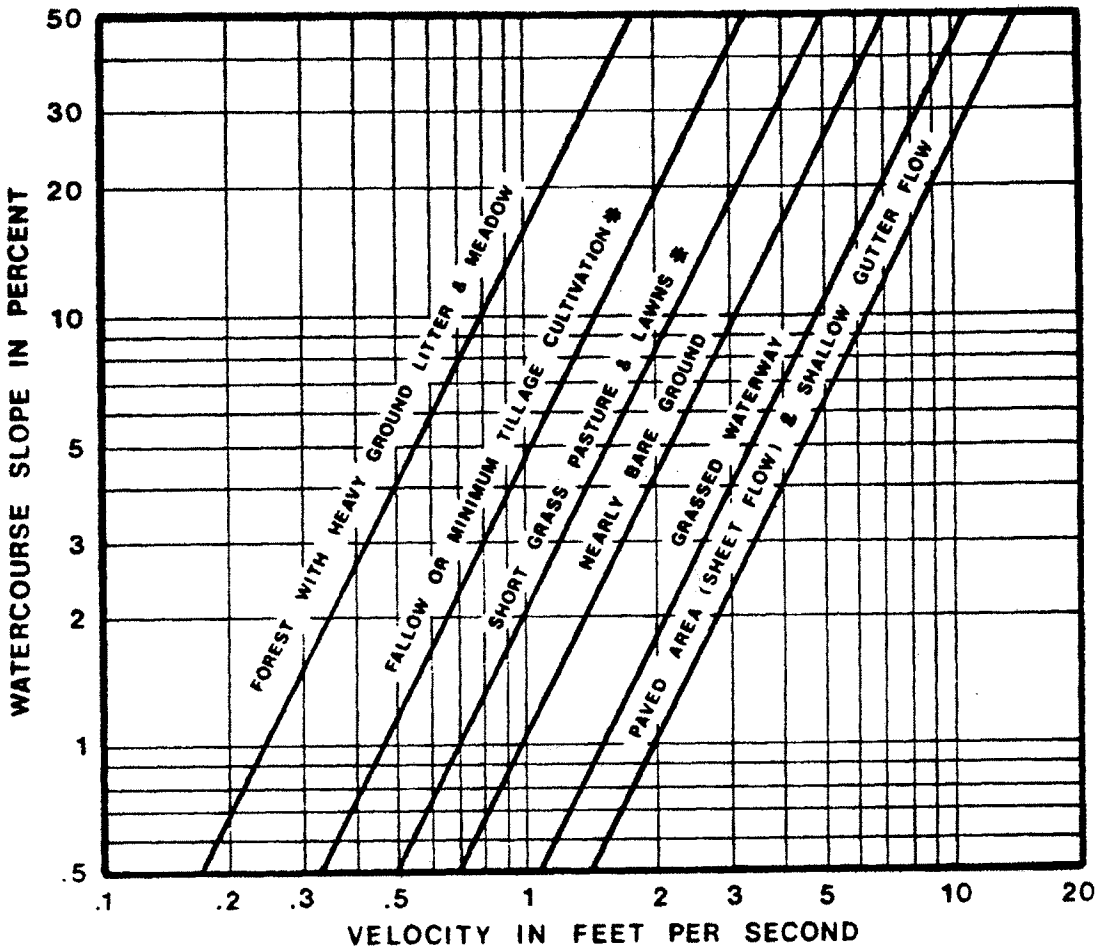

Figure RO-1—Estimate of Average Overland Flow Velocity for Use With the Rational Formula

TABLE 5.1
ONE-HOUR POINT RAINFALL

Frequency of Design Event (yr)	One-hour Point Rainfall, P_1 (in)
2	0.99
5	1.39
10	1.64
25	1.98
50	2.31
100	2.60

5.3 FLOOD HYDROLOGY OVERVIEW

Various methods exist to determine appropriate flood peaks or hydrographs for storm drainage planning and design. Methods for determining flood peaks or hydrographs are the Rational Method, the Colorado Urban Hydrograph Procedure (CUHP), and Urban Drainage Stormwater Management (UDSWM) model. The Town of Parker discourages the use of computer models other than CUHP and UDSWM since these programs are preferred, if not required, by UDFCD for studies involving major drainageways where UDFCD approval is sought or where maintenance eligibility is requested.

The three methods are briefly described in this section, and a discussion of their applicability to the Town of Parker is discussed. UDSWM is mostly used to combine and route the hydrographs generated using CUHP.

In general, the Rational Method is the most widely used and accepted technique for determining peak flows in urban areas for small basins. Within the constraints outlined in the MANUAL, use of the Rational Method provides a relatively simple but effective way to analyze storm runoff.

CUHP is somewhat more complicated than the Rational Method. It allows a manual computation of a runoff hydrograph which may be used for further hydraulic routing through channels and/or detention ponds. Historically, CUHP is best used in urban areas for which runoff coefficients have been derived. However, recent improvements by UDFCD include consideration for different soil types, thus CUHP is now more applicable to rural areas. The reader is referred to UDFCD for the latest version of CUHP.

UDSWM is a computer model that generates runoff hydrographs and routes and combines these hydrographs. UDSWM is a modified version of the Runoff Block of the Environmental Protection Agency's Storm Water Management Model (SWMM). It has been modified to be used in conjunction with CUHP. Table 5.2 herein provides guidance on selecting the appropriate method for a given project.

B.8

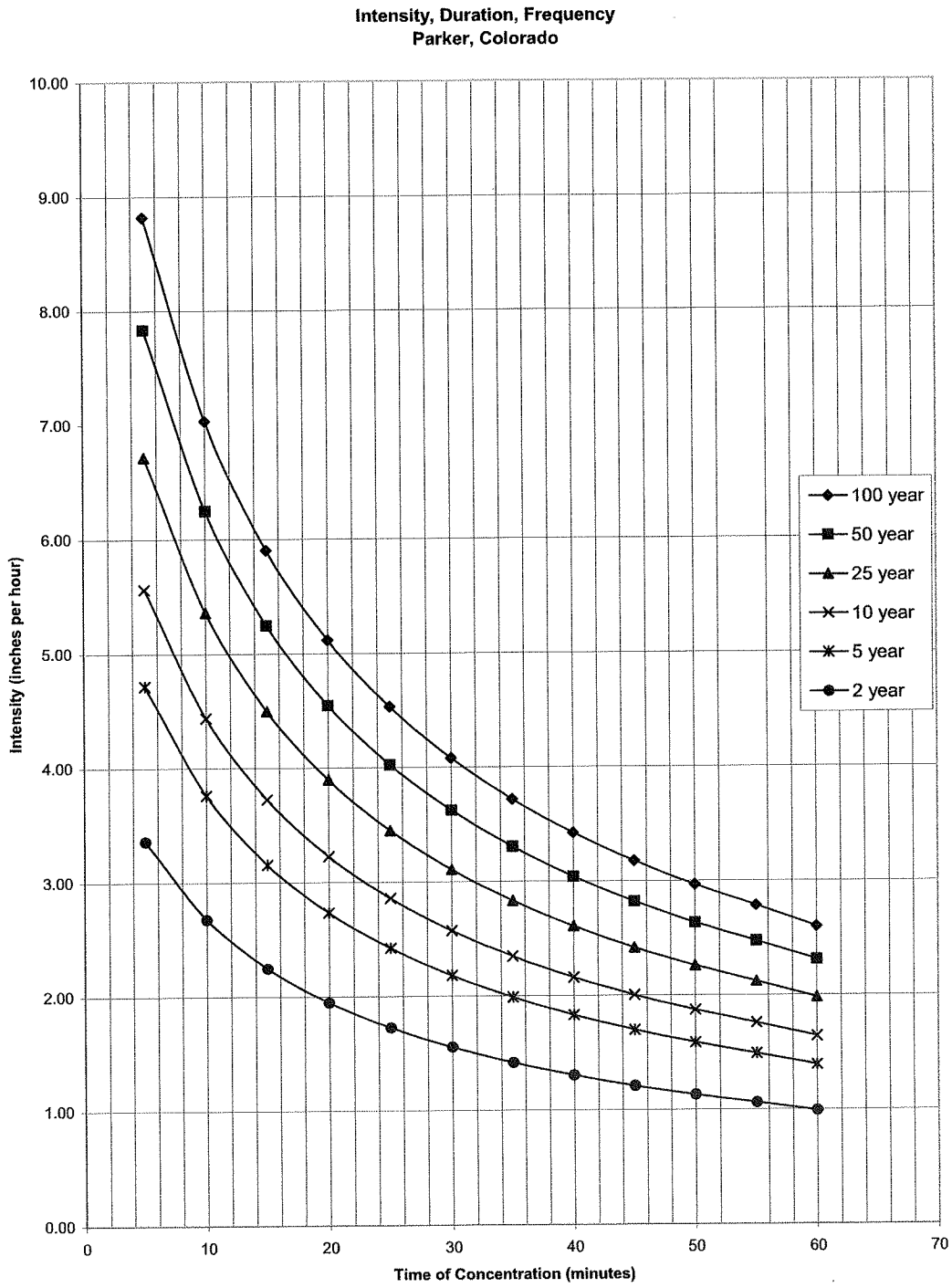

FIGURE 5.1
RAINFALL INTENSITY VERSUS DURATION CURVES FOR PARKER, COLORADO

B.9

TIME OF CONCENTRATION
Developed

MM&D Engineering Consultants, inc.

Calculated by WEM
Date 10/28/14
Revised

Job num. 12-326
Project Boondocks & Commercial Arrea

$$t_i = 0.395\frac{(1.1 - C5)*(L)^{0.5}}{(S)^{0.33}}$$

Sub-Basin Data			Overland Time (ti)			Travel Time (tt)				tc Check (Urban Basins)			Final	REMARKS
DESIGN	AREA Ac	C5	LENGTH ft	SLOPE %	ti min	LENGTH ft	SLOPE %	Vel. fps	tt min	Comp. tc	total leng. ft	tc=(L/180) +10 min	tc min	
A.1	0.50	0.14	240	3.3	18.1	0	0.0	0.0	0.0	18.1	240	11.3	**11.3**	
A.2	1.27	0.26	240	1.7	19.7	100	4.0	4.0	0.4	20.1	340	11.9	**11.9**	
A.3	2.29	0.32	60	6.7	5.8	370	1.9	2.7	2.3	8.1	430	12.4	**8.1**	
A.4	0.49	0.58	5	2.0	1.7	280	4.2	4.1	1.1	2.8	285	11.6	**5.0**	
A.5	0.29	0.73	5	2.0	1.2	200	4.0	4.0	0.8	2.0	205	11.1	**5.0**	
A.6	0.76	0.73	5	2.0	1.2	350	4.3	4.2	1.4	2.6	355	12.0	**5.0**	
A.7	0.25	0.73	5	2.0	1.2	225	4.0	4.0	0.9	2.1	230	11.3	**5.0**	
A.8	0.57	0.47	5	2.0	2.0	50	2.0	2.8	0.3	2.3	55	10.3	**5.0**	
A.9	0.94	0.64	5	2.0	14.8	50	2.0	2.8	0.3	15.1	55	10.3	**10.3**	
A.10	0.14	0.37	5	2.0	2.3	50	2.0	2.8	0.3	2.6	55	10.3	**5.0**	
A.11	0.37	0.32	50	20.0	3.7	50	2.0	2.8	0.3	4.0	100	10.6	**5.0**	
A.12	0.61	0.73	5	2.0	1.2	130	3.1	3.4	0.6	1.8	135	10.8	**5.0**	
A.13	0.59	0.73	5	2.0	1.2	160	3.1	3.4	0.8	2.0	1030	15.7	**5.0**	
A.14	0.26	0.45	25	20.0	2.2	130	1.5	2.4	0.9	3.1	155	10.9	**5.0**	

B.10

TIME OF CONCENTRATION
Developed

MM&D Engineering Consultants, inc.

Calculated by WEM
Date 10/28/14
Revised

Job num. 12-326
Project Boondocks & Commercial Arrea

$$t_i = 0.395\frac{(1.1 - C5)*(L)^{0.5}}{(S)^{0.33}}$$

Sub-Basin Data			Overland Time (t_i)			Travel Time (t_t)				t_c Check (Urban Basins)			Final	REMARKS
DESIGN	AREA Ac	C5	LENGTH ft	SLOPE %	t_i min	LENGTH ft	SLOPE %	Vel. fps	t_t min	Comp. t_c	total leng. ft	t_c=(L/180) +10 min	t_c min	
A.15	0.46	0.44	5	2.0	2.1	160	2.0	2.8	1.0	3.1	165	10.9	**5.0**	
A.16	0.18	0.73	5	2.0	1.2	180	3.1	3.4	0.9	2.1	185	11.0	**5.0**	
A.17	0.25	0.73	5	2.0	1.2	170	4.7	4.2	0.7	1.9	175	11.0	**5.0**	
A.18	0.55	0.73	5	2.0	1.2	140	3.7	4.0	0.6	1.8	145	10.8	**5.0**	
A.19	0.40	0.73	5	2.0	1.2	150	3.3	3.6	0.7	1.9	155	10.9	**5.0**	
A.20	0.44	0.73	5	2.0	1.2	150	3.3	3.6	0.7	1.9	155	10.9	**5.0**	
A.21	1.18	0.73	5	2.0	1.2	200	1.5	2.5	1.3	2.5	205	11.1	**5.0**	
B.1	0.56	0.28	40	10.0	4.4	260	1.9	2.8	1.5	5.9	300	11.7	**5.9**	
B.2	1.30	0.45	5	2.0	2.1	570	1.0	2.0	4.8	6.8	575	13.2	**8.8**	
B.3	0.73	0.45	40	2.0	5.9	200	3.0	3.5	1.0	6.9	240	11.3	**6.9**	
B.4	0.71	0.36	5	2.0	2.4	320	1.5	2.5	2.1	4.5	325	11.8	**5.0**	

STORM DRAINAGE SYSTEM DESIGN
(RATIONAL METHOD PROCEDURE)

MM&D Engineering Services, Inc.

Calculated by WEM
Date 10/29/14
Revised I = (28.5Pi)/(10+tc)^0.786

Job num. 13-343
Project Boondocks & Commercial Property
Design Storm 5.0 I = 1.39

STREET	DESIGN POINT	AREA DESIGN	AREA (acre)	RUNOFF COEF.	DIRECT RUNOFF tc min.	DIRECT RUNOFF C * A	DIRECT RUNOFF I in/hr	DIRECT RUNOFF Q cfs	TOTAL RUNOFF tc min.	TOTAL RUNOFF C * A (sum)	TOTAL RUNOFF I in/hr	TOTAL RUNOFF Q cfs	COMMENTS
		Developed Basins											
				5 year runoff									
	1	A.1	0.50	0.14	11.3	0.07	3.6	0.3					**flows into Type C inlet**
	2	A.2	1.27	0.26	11.9	0.33	3.5	1.2					**flows into Type C inlet**
	3	A.3	2.29	0.32	8.1	0.73	4.1	3.0					**flows into Type C inlet**
	4	A.4	0.49	0.58	5.0	0.28	4.7	1.3					**Flows into 5 Type R inlet**
	5	A.5	0.29	0.73	5.0	0.21	4.7	1.0					**Flows into 5 Type R inlet**
	6	A.6	0.76	0.73	5.0	0.55	4.7	2.6					**Flows into 5 Type R inlet**
Total Flow in existing 30" RCP; Sum (AC) = AC (DP 1 - DP 6) = 2.17									**11.9**	**2.17**	**3.5**	**7.6**	
	7	A.7	0.25	0.73	5.0	0.18	4.7	0.9					**Flows into 5 Type R inlet**
	8	A.8	0.57	0.47	5.0	0.27	4.7	1.3					**Flows into 5 Type R inlet**
	9	A.9	0.94	0.64	10.3	0.60	3.7	2.2					**Flows into 5 Type R inlet**
	10	A.10	0.14	0.37	5.0	0.05	4.7	0.2					**Flows into 5 Type R inlet**
	11	A.11	0.37	0.32	5.0	0.12	4.7	0.6					**Flows into 5 Type R inlet**
	12	A.12	0.61	0.73	5.0	0.45	4.7	2.1					**Flows into 5 Type R inlet**

STORM DRAINAGE SYSTEM DESIGN
(RATIONAL METHOD PROCEDURE)

MM&D Engineering Services, Inc.

Calculated by WEM
Date 10/29/14
Revised I = (28.5Pi)/(10+tc)^0.786

Job num. 13-343
Project Boondocks & Commercial Property
Design Storm 5 year I = 1.39

STREET	DESIGN POINT	AREA DESIGN	AREA (acre)	RUNOFF COEF.	DIRECT RUNOFF tc min.	DIRECT RUNOFF C * A	DIRECT RUNOFF I in/hr	DIRECT RUNOFF Q cfs	TOTAL RUNOFF tc min.	TOTAL RUNOFF C * A (sum)	TOTAL RUNOFF I in/hr	TOTAL RUNOFF Q cfs	COMMENTS
		Developed Basins											
				5 year runoff									
	13	A.13	0.59	0.73	5.0	0.43	4.7	2.0					**flows into 5' Type R inlet**
	14	A.14	0.26	0.45	5.0	0.12	4.7	0.6					**flows into chase & added with A.15**
		A.15	0.48	0.44	5.0	0.21	4.7	1.0					**Flows into Type C inlets**
	15	Sum AC=AC(A.14)+AC(A.15) = 0.21+0.12= 0.33											**tc = 5min + 1.0 travel time = 6.0**
					6.0		4.5		6.0	0.33	4.5	1.5	**flows into 5' Type R inlet**
		A.16	0.18	0.73	5.0	0.13	4.7	0.6					**Flows into A.17**
		A.17	0.25	0.73	5.0	0.18	4.7	0.9					**Flows into 5 Type R inlet**
	16	Sum AC=AC(A.16)+AC(A.17) = 0.13+0.18= 0.31											**tc = 5min + 0.9 travel time = 5.9**
					5.9		4.5		5.9	0.31	4.5	1.4	**Flow into 5' Type R In;let**
	17	A.18	0.55	0.73	5.0	0.40	4.7	1.9					**Flows into 5 Type R inlet**
	18	A.19	0.40	0.73	5.0	0.29	4.7	1.4					**Flows into 5 Type R inlet**
	19	A.20	0.44	0.73	5.0	0.32	4.7	1.5					**Flows into 5 Type R inlet**
	20	A.21	1.18	0.73	5.0	0.86	4.7	4.1					

Total flow into existing 42" RCP; Sum(AC) = AC(DP 7 to DP 20) = 4.63; Tc = 10.7

									10.7	**4.63**	**3.7**	**17.1**	

B.13

STORM DRAINAGE SYSTEM DESIGN
(RATIONAL METHOD PROCEDURE)

MM&D Engineering Services, Inc.

Calculated by WEM
Date 10/29/14
Revised I = (28.5Pi)/(10+tc)^0.786

Job num. 13-343
Project Boondocks & Commercial Property
Design Storm 5 year I = 1.39

STREET	DESIGN POINT	AREA DESIGN	AREA (acre)	RUNOFF COEF.	DIRECT RUNOFF tc min.	DIRECT RUNOFF C * A	DIRECT RUNOFF I in/hr	DIRECT RUNOFF Q cfs	TOTAL RUNOFF tc min.	TOTAL RUNOFF C * A (sum)	TOTAL RUNOFF I in/hr	TOTAL RUNOFF Q cfs	COMMENTS
		Developed Basins											
				5 year runoff									
	21	B.1	0.56	0.28	5.9	0.16	4.5	0.7					**flows into Basin B.2**
		B.2	1.30	0.45	8.8	0.59	3.9	2.3					**total into Type 13 inlet**
	22	Sum AC=AC(B.1)+AC(B.2) = 0.16+0.59= 0.75											**tc = 5.9 min + 4.5 travel time = 0.4**
					10.4		3.7		10.4	0.75	3.7	2.8	**flow to be added with B.4**
	23	B.3	0.73	0.45	6.9	0.33	4.3	1.4					**flow to be added with B.4**
		B.4	0.71	0.36	5.0	0.26	4.7	1.2					
	24	Sum AC=AC(B.3)+AC(B.4) = 0.33+0.26= 0.59											**tc = 6.9 min + 2.1 travel time = 9.0**
					9.0		3.9		9.0	0.59	3.9	2.3	**flow to be added with B.4**
	25	Total flow leaving Basin B.4 to north											
		Sum AC=AC(DP 22)+AC(BDP 24) = 0.75+0.59= 0.59											
					10.4		3.7		10.4	0.59	3.7	2.2	

B.14

STORM DRAINAGE SYSTEM DESIGN
(RATIONAL METHOD PROCEDURE)

MM&D Engineering Services, Inc.

Calculated by WEM
Date 10/29/14
Revised I = (28.5Pi)/(10+tc)^0.786

Job num. 13-343
Project Boondocks & Commercial Property
Design Storm 100 year I = 2.60

STREET	DESIGN POINT	AREA DESIGN	AREA (acre)	RUNOFF COEF.	DIRECT RUNOFF tc min.	DIRECT RUNOFF C * A	DIRECT RUNOFF I in/hr	DIRECT RUNOFF Q cfs	TOTAL RUNOFF tc min.	TOTAL RUNOFF C * A (sum)	TOTAL RUNOFF I in/hr	TOTAL RUNOFF Q cfs	COMMENTS
		Developed Basins											
				100 year runoff									
	1	A.1	0.50	0.40	11.3	0.20	6.7	1.3					**flows into Type C inlet**
	2	A.2	1.27	0.48	11.9	0.61	6.5	4.0					**flows into Type C inlet**
	3	A.3	2.29	0.51	8.1	1.17	7.6	8.9					**flows into Type C inlet**
	4	A.4	0.49	0.68	5.0	0.33	8.8	2.9					**Flows into 5 Type R inlet**
	5	A.5	0.29	0.81	5.0	0.23	8.8	2.1					**Flows into 5 Type R inlet**
	6	A.6	0.76	0.81	5.0	0.62	8.8	5.4					**Flows into 5 Type R inlet**
Total Flow in existing 30" RCP; Sum (AC) = AC (DP 1 - DP 6) = 3.36; Tc = 11.9 min									**11.9**	**3.36**	**6.5**	**21.8**	
	7	A.7	0.25	0.81	5.0	0.20	8.8	1.8					**Flows into 5 Type R inlet**
	8	A.8	0.57	0.60	5.0	0.34	8.8	3.0					**Flows into 5 Type R inlet**
	9	A.9	0.94	0.74	10.3	0.70	7.0	4.8					**Flows into 5 Type R inlet**
	10	A.10	0.14	0.53	5.0	0.07	8.8	0.7					**Flows into 5 Type R inlet**
	11	A.11	0.37	0.51	5.0	0.19	8.8	1.7					**Flows into 5 Type R inlet**
	12	A.12	0.61	0.81	5.0	0.49	8.8	4.4					**Flows into 5 Type R inlet**

W-5

STORM DRAINAGE SYSTEM DESIGN
(RATIONAL METHOD PROCEDURE)

MM&D Engineering Services, Inc.

Calculated by WEM
Date 10/29/14
Revised I = (28.5Pi)/(10+tc)^0.786

Job num. 13-343
Project Boondocks & Commercial Property
Design Storm 100 year I = 2.60

STREET	DESIGN POINT	AREA DESIGN	AREA (acre)	RUNOFF COEF.	DIRECT RUNOFF tc min.	DIRECT RUNOFF C * A	DIRECT RUNOFF I in/hr	DIRECT RUNOFF Q cfs	TOTAL RUNOFF tc min.	TOTAL RUNOFF C * A (sum)	TOTAL RUNOFF I in/hr	TOTAL RUNOFF Q cfs	COMMENTS
		Developed Basins											
				100 year runoff									
	13	A.13	0.59	0.81	5.0	0.48	8.8	4.2					**flows into 5' Type R inlet**
	14	A.14	0.26	0.63	5.0	0.16	8.8	1.4					**flows into chase & added with A.15**
		A.15	0.48	0.59	5.0	0.28	8.8	2.5					**Flows into Type C inlets**
	15	Sum AC=AC(A.14)+AC(A.15) = 016+0.28= 0.44											**tc = 5min + 1.0 travel time = 6.0**
					6.0		8.4		6.0	0.44	8.4	3.7	**flows into 5' type R**
		A.16	0.18	0.81	5.0	0.15	8.8	1.3					**Flows into A.17**
		A.17	0.25	0.81	5.0	0.20	8.8	1.8					**Flows into 5 Type R inlet**
	16	Sum AC=AC(A.16)+AC(A.17) = 0.15+0.20= 0.35											**tc = 5min + 0.9 travel time = 5.9**
					5.9		8.4		5.9	0.35	8.4	2.9	**Flow into 5' Type R In;let**
	17	A.18	0.55	0.81	5.0	0.45	8.8	3.9					**Flows into 5 Type R inlet**
	18	A.19	0.40	0.81	5.0	0.32	8.8	2.9					**Flows into 5 Type R inlet**
	19	A.20	0.44	0.81	5.0	0.36	8.8	3.1					**Flows into 5 Type R inlet**
	20	A.21	1.18	0.81	5.0	0.96	8.8	8.4					**Flows into 5 Type R inlet**

Total flow into existing 42" RCP; Sum(AC) = AC(DP 7 to DP 20) = 5.33 ; Tc = 10.7

	10.7	**5.33**	**7.0**	**37.3**

B.16

STORM DRAINAGE SYSTEM DESIGN
(RATIONAL METHOD PROCEDURE)

MM&D Engineering Services, Inc.

Calculated by WEM
Date 10/29/14
Revised I = (28.5Pi)/(10+tc)^0.786

Job num. 13-343
Project Boondocks & Commercial Property
Design Storm 100 year I = 2.6

STREET	DESIGN POINT	AREA DESIGN	AREA (acre)	RUNOFF COEF.	DIRECT RUNOFF tc min.	DIRECT RUNOFF C * A	DIRECT RUNOFF I in/hr	DIRECT RUNOFF Q cfs	TOTAL RUNOFF tc min.	TOTAL RUNOFF C * A (sum)	TOTAL RUNOFF I in/hr	TOTAL RUNOFF Q cfs	COMMENTS
		Developed Basins											
				100 year runoff									
	21	B.1	0.56	0.48	5.9	0.27	8.4	2.3					**flows into Basin B.2**
		B.2	1.30	0.63	8.8	0.82	7.4	6.0					**total into Type 13 inlet**
	22	Sum AC=AC(B.1)+AC(B.2) = 0.27+0.82= 1.09											**tc = 5.9 min + 4.5 travel time = 0.4**
					10.4		6.9		10.4	1.09	6.9	7.5	**flow to be added with B.4**
	23	B.3	0.73	0.63	6.9	0.46	8.0	3.7					**flow to be added with B.4**
		B.4	0.71	0.63	5.0	0.45	8.8	3.9					
	24	Sum AC=AC(B.3)+AC(B.4) = 0.46+0.45= 0.91											**tc = 6.9 min + 2.1 travel time = 9.0**
					9.0		7.3		9.0	0.91	7.3	6.6	**flow to be added with B.4**
	25	Total flow leaving Basin B.4 to north											
		Sum AC=AC(DP 22)+AC(BDP 24) = 1.09+0.91= 2.0											
					10.4		6.9		10.4	2.00	6.9	13.8	

B.12

APPENDIX C

Inlet Calculations

INLET CAPACITY CHART SUMP CONDITIONS

AREA (TYPE C) INLET

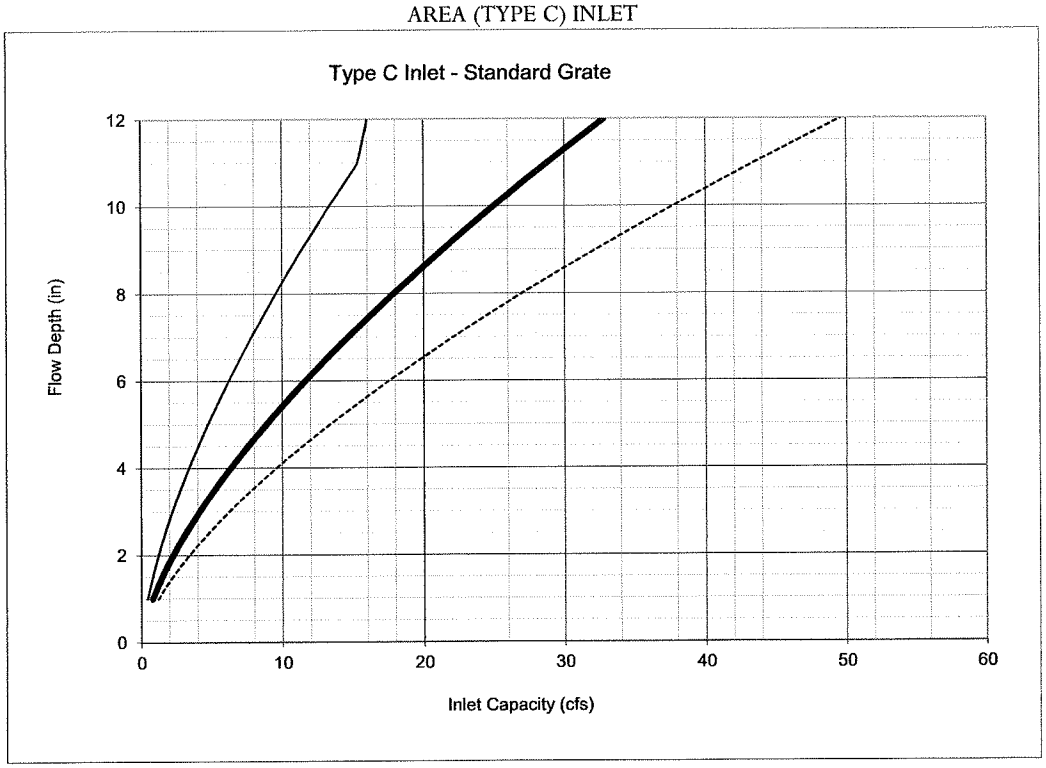

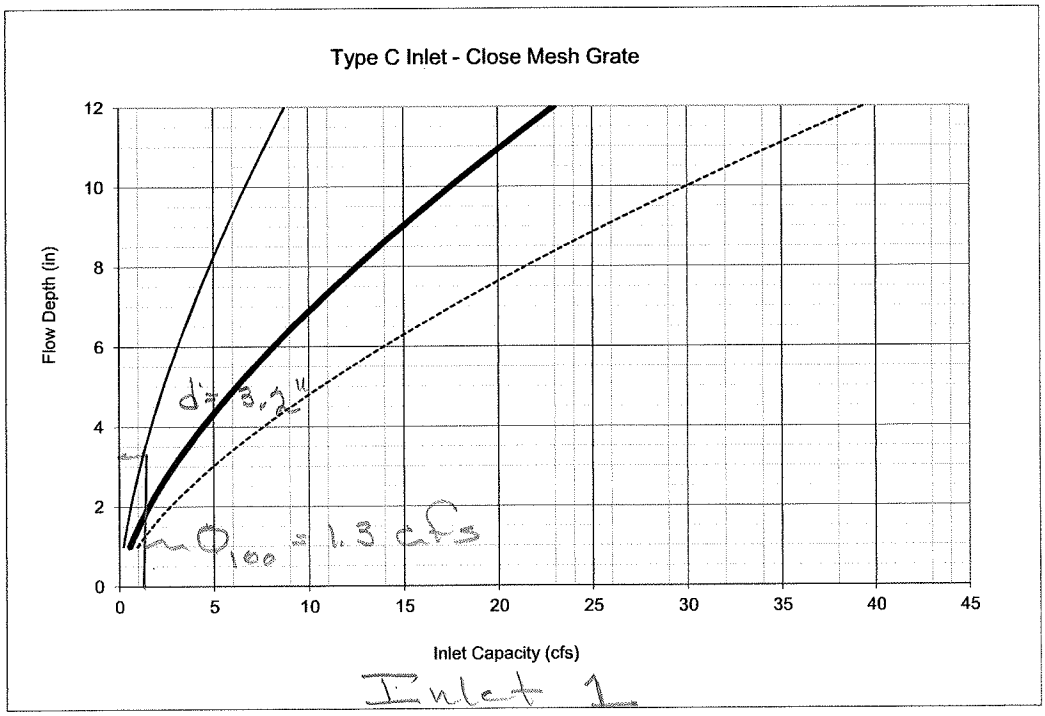

One Grate — Two Grates — Three Grates

Note:

1. The Town of Parker standard inlet parameters must apply to use these charts. See the Roadway Manual.

$Q_5 = 0.3$ cfs; $d = 1\frac{1}{2}$"

$Q_{100} = 1.3$ cfs; $d = 3\frac{1}{4}$"

INLET CAPACITY CHART SUMP CONDITIONS

AREA (TYPE C) INLET

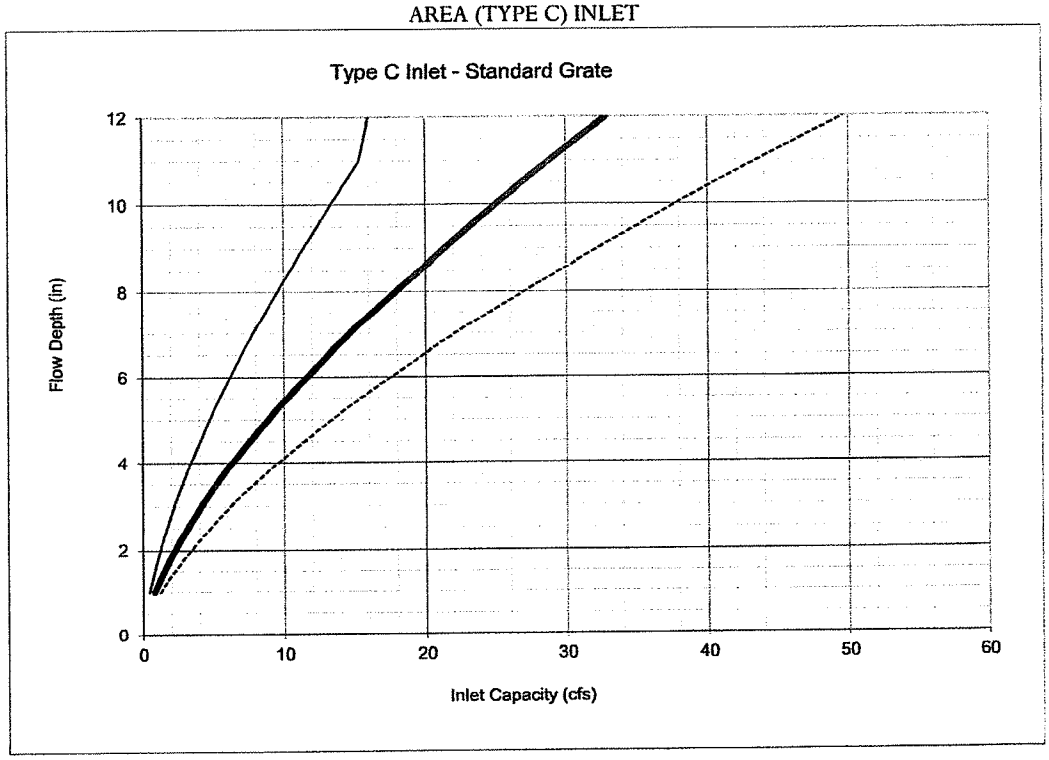

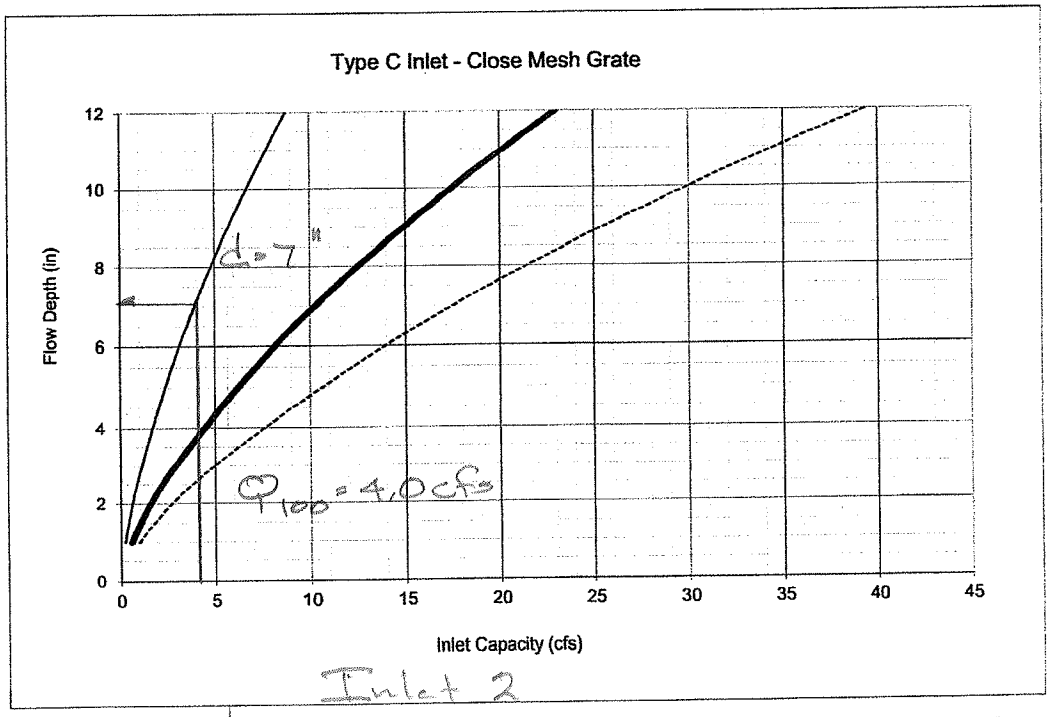

Inlet 2

One Grate — Two Grates — Three Grates

Note:

1. The Town of Parker standard inlet parameters must apply to use these charts. See the Roadway Manual.

Q_5 = 1.25 cfs; d = 3 1/4"

Q_{100} = 4.0 cfs; d = 7"

Assumes all upstream inlets are plugged.

INLET CAPACITY CHART SUMP CONDITIONS

AREA (TYPE C) INLET

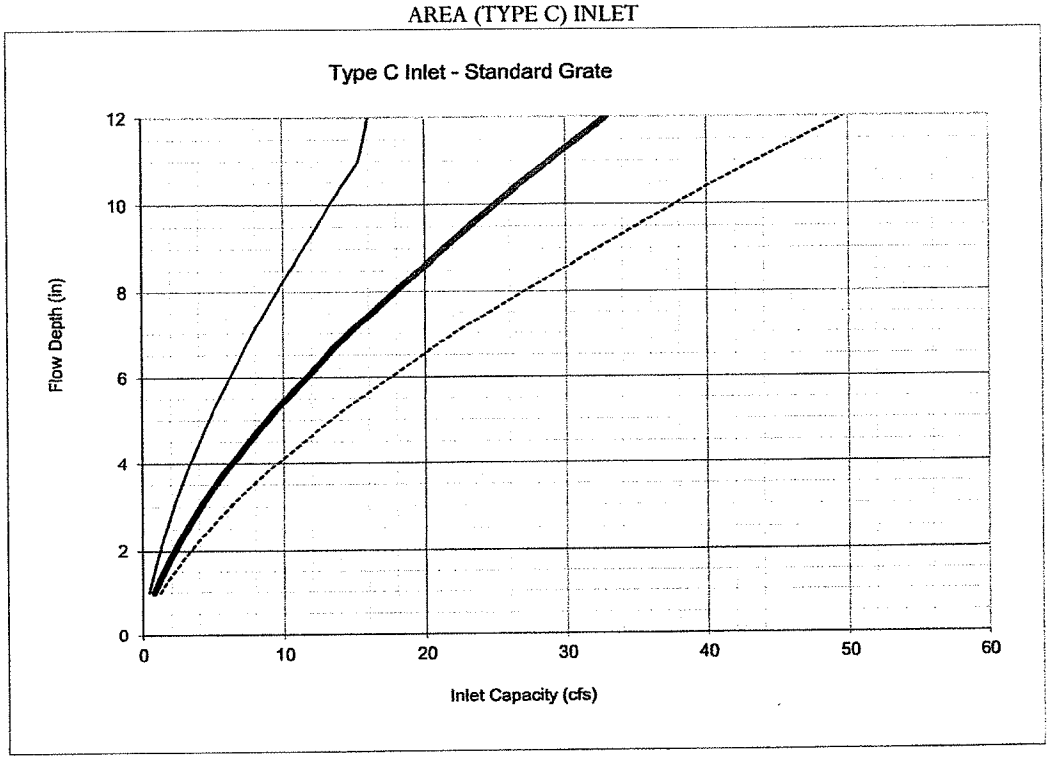

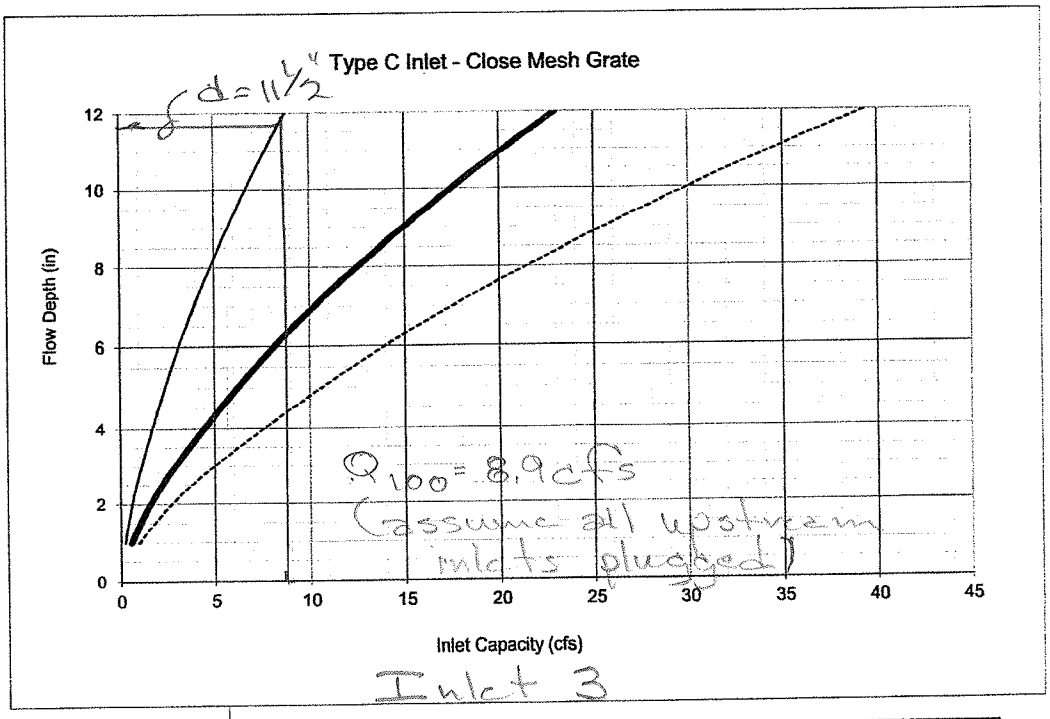

Note:

1. The Town of Parker standard inlet parameters must apply to use these charts. See the Roadway Manual.

$Q_5 = 3.0$ cfs; $d = 6''$

$Q_{100} = 8.9$ cfs; $d = 11\frac{1}{2}''$

Assumes all upstream inlets are plugged.

INLET CAPACITY CHART SUMP CONDITIONS

CURB OPENING (TYPE R) INLET

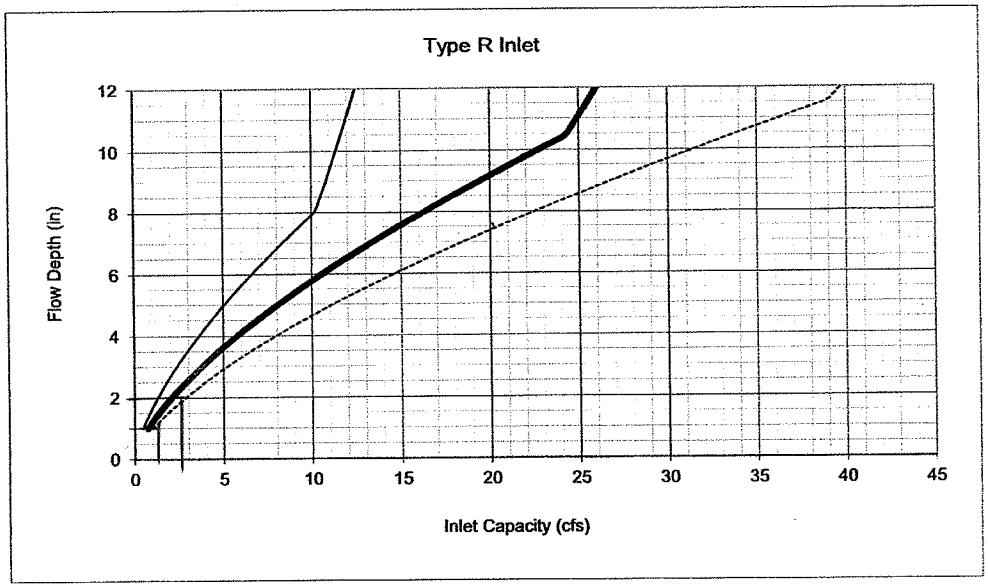

5' Inlet 10' Inlet 15' Inlet

Inlet 4
Q_5 = 1.7 cfs; d = 1 1/4"
Q_{100} = 3.0 cfs; d = 2"

Note:
1. The Town of Parker standard inlet parameters must apply to use this chart. See the Roadway Manual.

INLET CAPACITY CHART SUMP CONDITIONS

CURB OPENING (TYPE R) INLET

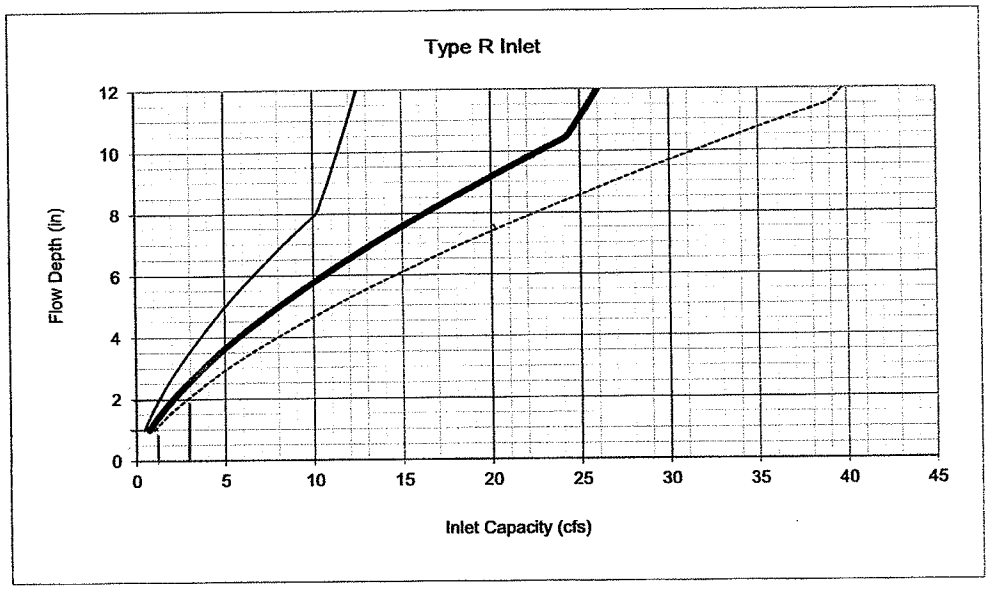

5' Inlet 10' Inlet 15' Inlet

Inlet #5

$Q_5 = 1.4$ cfs ; d = 1"

$Q_{100} = 2.9$ cfs ; d = 2"

Note:

1. The Town of Parker standard inlet parameters must apply to use this chart. See the Roadway Manual.

INLET CAPACITY CHART SUMP CONDITIONS

CURB OPENING (TYPE R) INLET

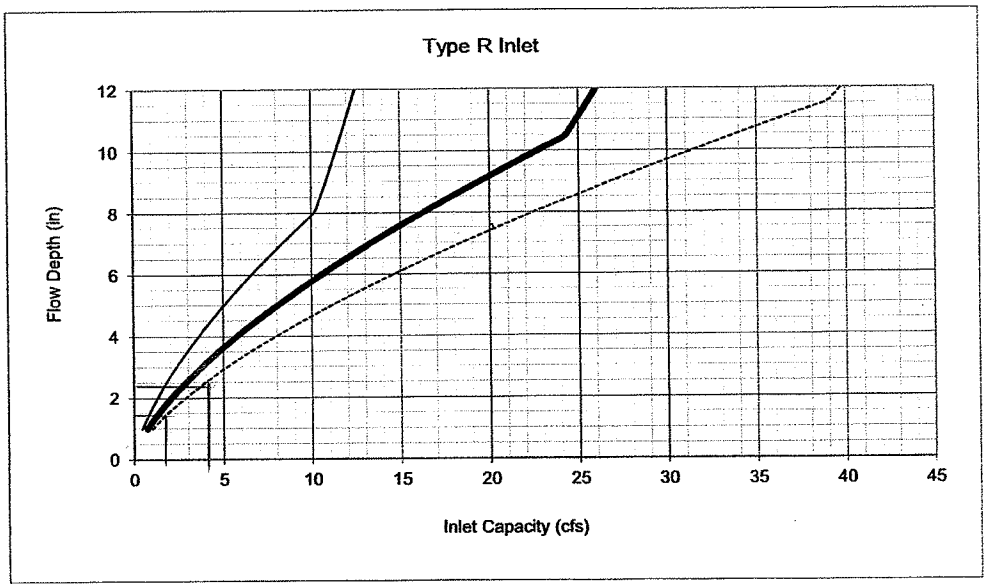

5' Inlet 10' Inlet 15' Inlet

Inlet 6

$Q_5 = 2.0$ cfs ; $d = 1\frac{1}{2}$"

$Q_{100} = 4.2$ cfs ; $d = 2\frac{1}{2}$"

Note:

1. The Town of Parker standard inlet parameters must apply to use this chart. See the Roadway Manual.

INLET CAPACITY CHART SUMP CONDITIONS

CURB OPENING (TYPE R) INLET

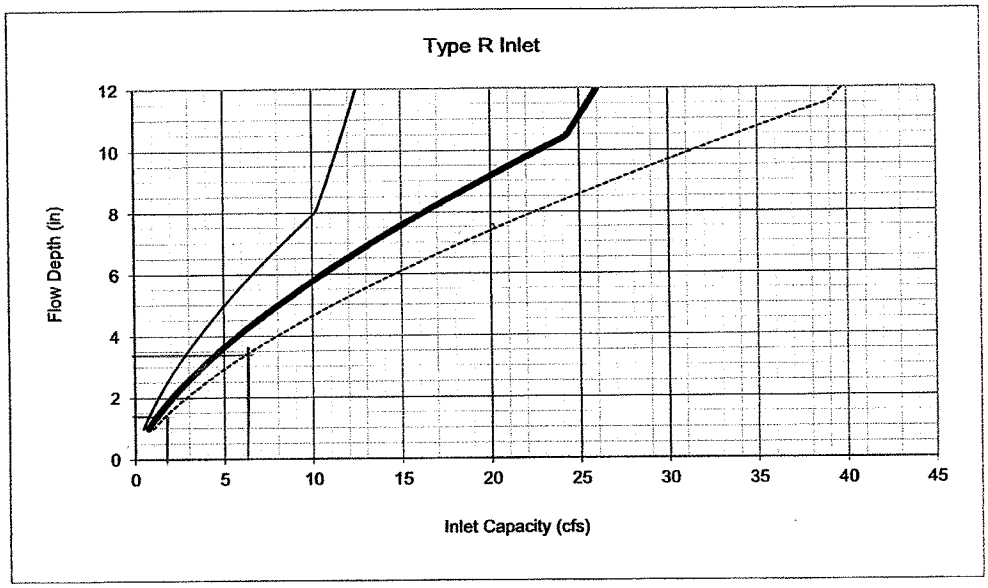

5' Inlet 10' Inlet 15' Inlet

Inlet 7

$Q_5 = 2.7$ cfs; d = 1½"

$Q_{100} = 6.1$ cfs; d = 3½"

Note:

1. The Town of Parker standard inlet parameters must apply to use this chart. See the Roadway Manual.

INLET CAPACITY CHART SUMP CONDITIONS

CURB OPENING (TYPE R) INLET

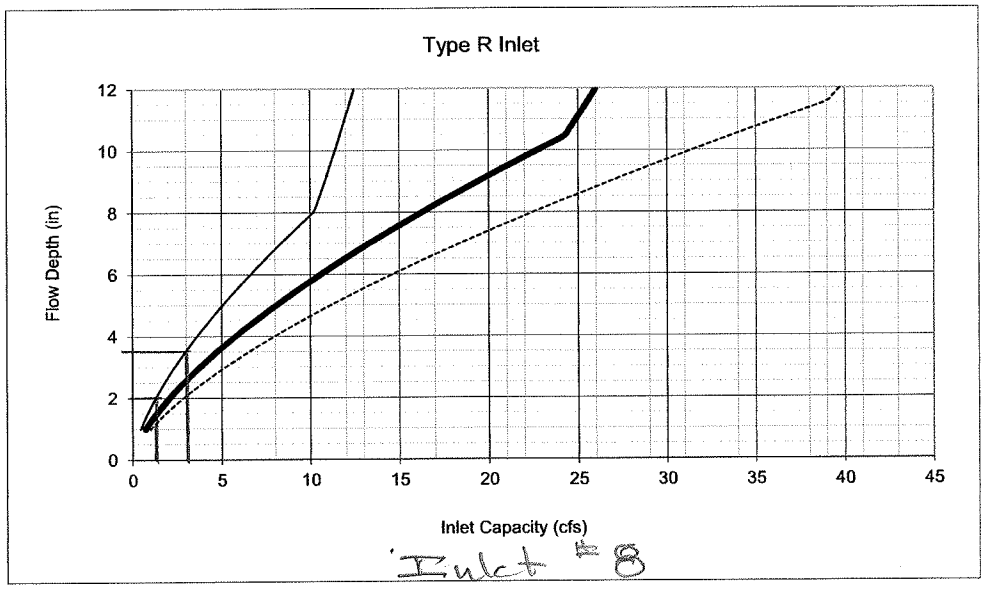

5' Inlet 10' Inlet 15' Inlet

Inlet #8
$Q_5 = 1.3$ cfs; d = 2"
$Q_{100} = 3.0$ cfs; d = 3 1/2"

Note:
1. The Town of Parker standard inlet parameters must apply to use this chart. See the Roadway Manual.

INLET CAPACITY CHART SUMP CONDITIONS

CURB OPENING (TYPE R) INLET

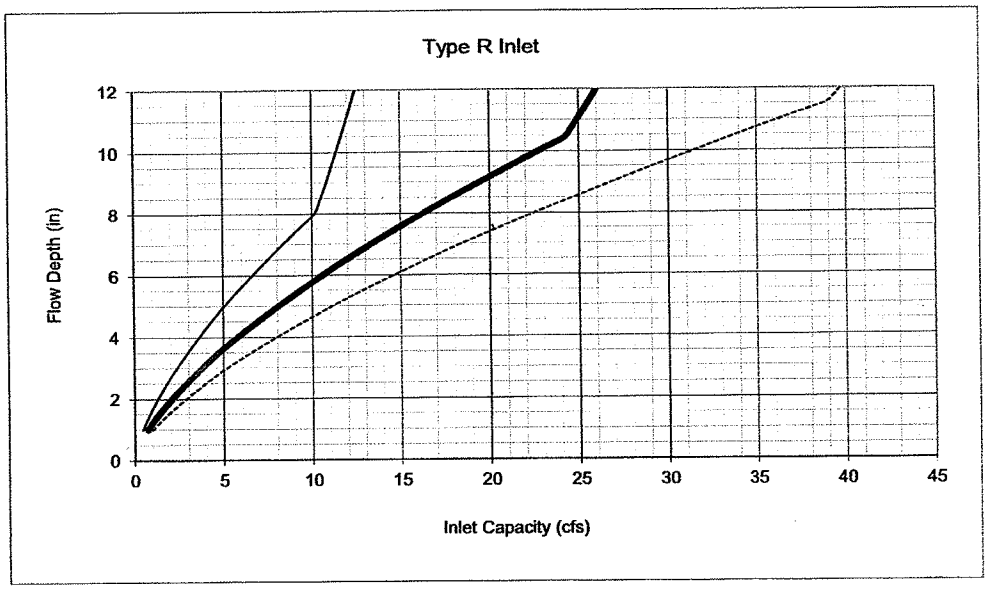

5' Inlet 10' Inlet 15' Inlet

Inlet #9

$Q_5 = 0.2$ cfs; d = 1"

$Q_{100} = 0.7$ cfs; d = 1"

Note:

1. The Town of Parker standard inlet parameters must apply to use this chart. See the Roadway Manual.

INLET CAPACITY CHART SUMP CONDITIONS

CURB OPENING (TYPE R) INLET

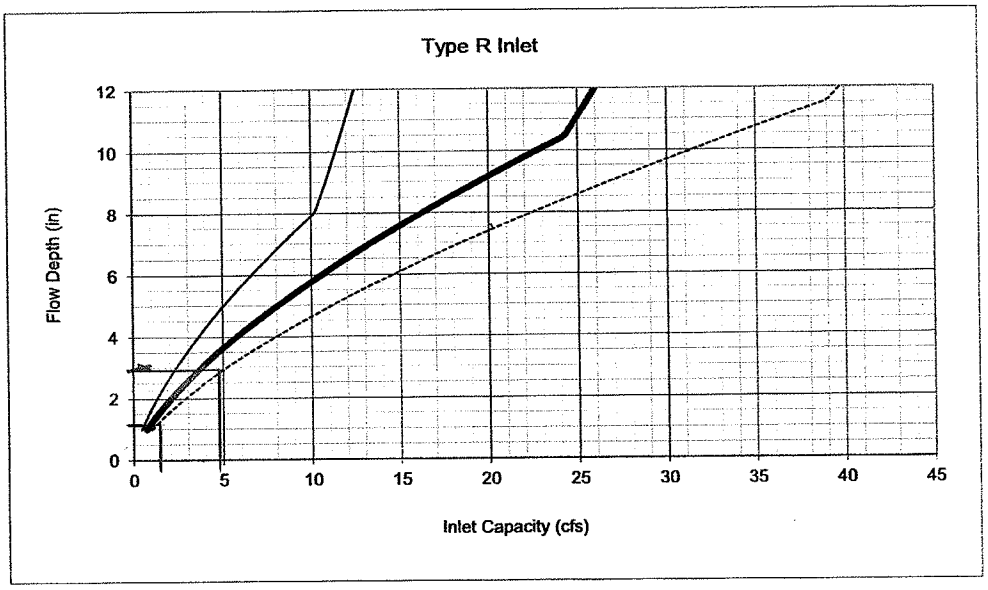

5' Inlet 10' Inlet 15' Inlet

Inlet 10
$Q_5 = 2.2$ cfs; d = 1 3/4"
$Q_{100} = 4.8$ cfs; d = 3"

Note:
1. The Town of Parker standard inlet parameters must apply to use this chart. See the Roadway Manual.

INLET CAPACITY CHART SUMP CONDITIONS

CURB OPENING (TYPE R) INLET

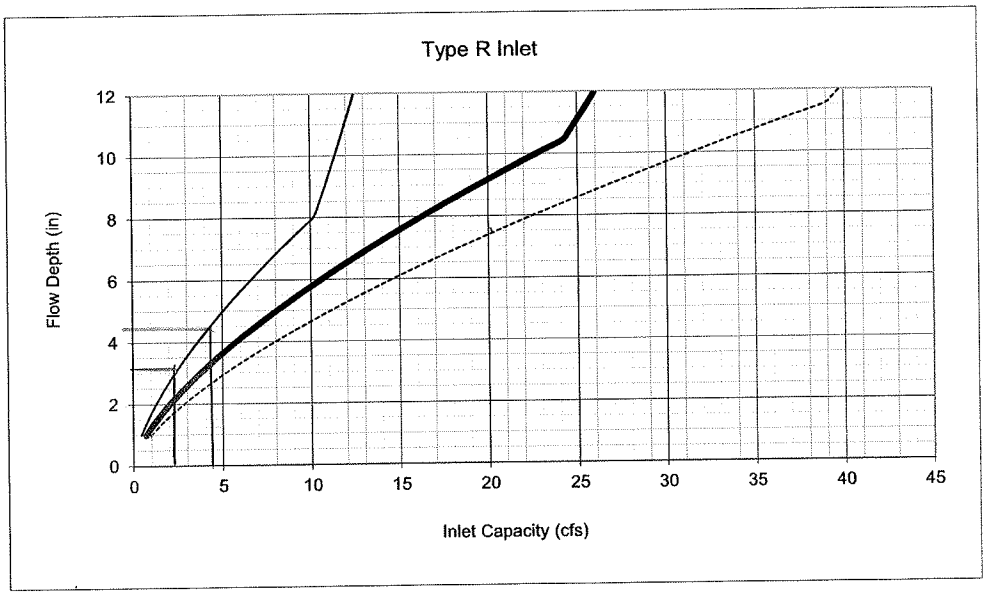

5' Inlet 10' Inlet 15' Inlet

Inlet #12
5 yr = 2.1 cfs; d = 3"
100 yr = 4.4 cfs; d = 4 1/2"

Note:
1. The Town of Parker standard inlet parameters must apply to use this chart. See the Roadway Manual.

INLET CAPACITY CHART SUMP CONDITIONS

CURB OPENING (TYPE R) INLET

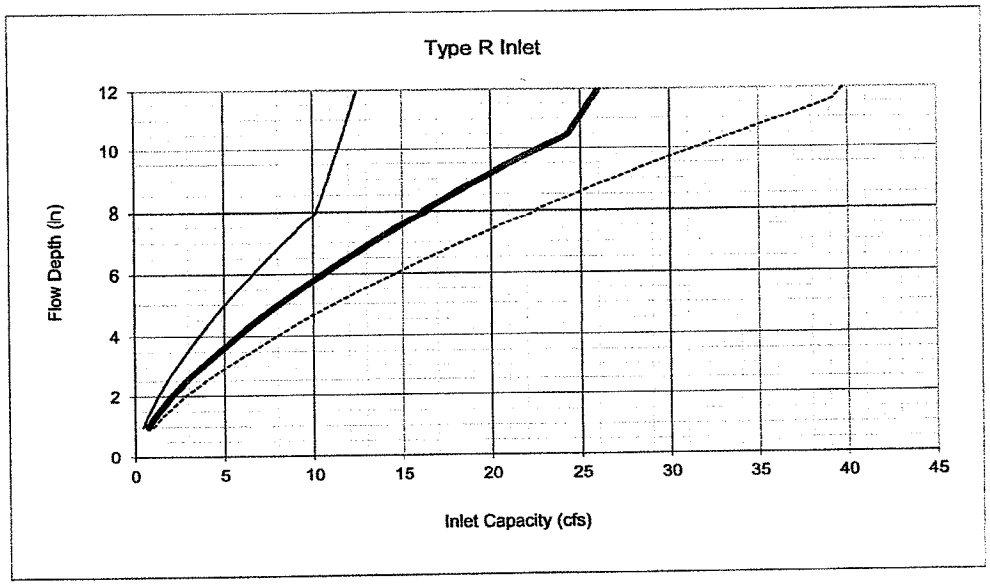

Inlet 13.

5' Inlet — 10' Inlet — 15' Inlet

$Q_5 = 2.0$ cfs; $d = 3''$

$Q_{100} = 4.2$ cfs; $d = 4\frac{1}{2}''$

Note:

1. The Town of Parker standard inlet parameters must apply to use this chart. See the Roadway Manual.

INLET CAPACITY CHART SUMP CONDITIONS

CURB OPENING (TYPE R) INLET

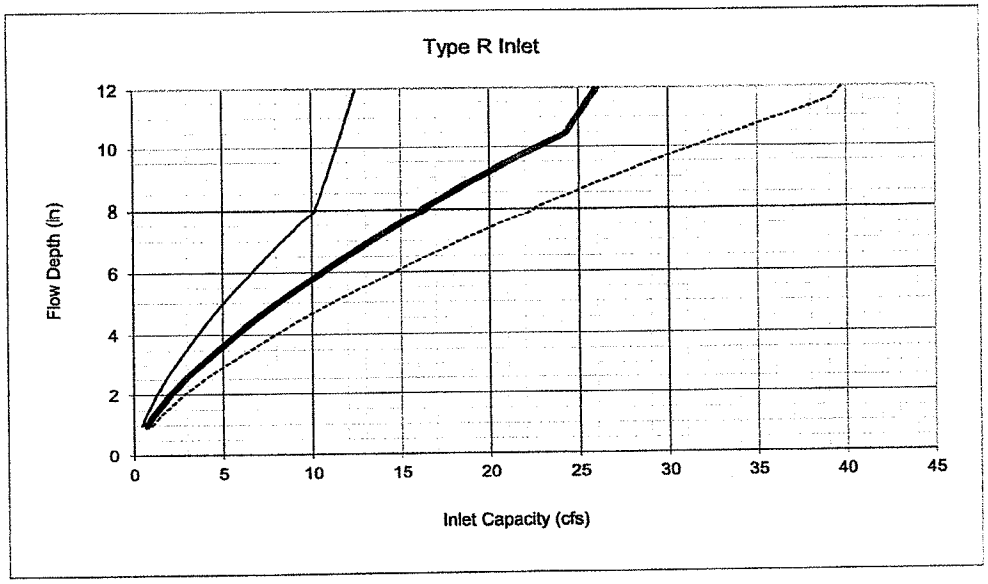

Inlet #15

5' Inlet 10' Inlet 15' Inlet

$Q_5 = 1.5$ cfs; d = 2"

$Q_{100} = 3.7$ cfs; d = 4"

Note:

1. The Town of Parker standard inlet parameters must apply to use this chart. See the Roadway Manual.

INLET CAPACITY CHART SUMP CONDITIONS

CURB OPENING (TYPE R) INLET

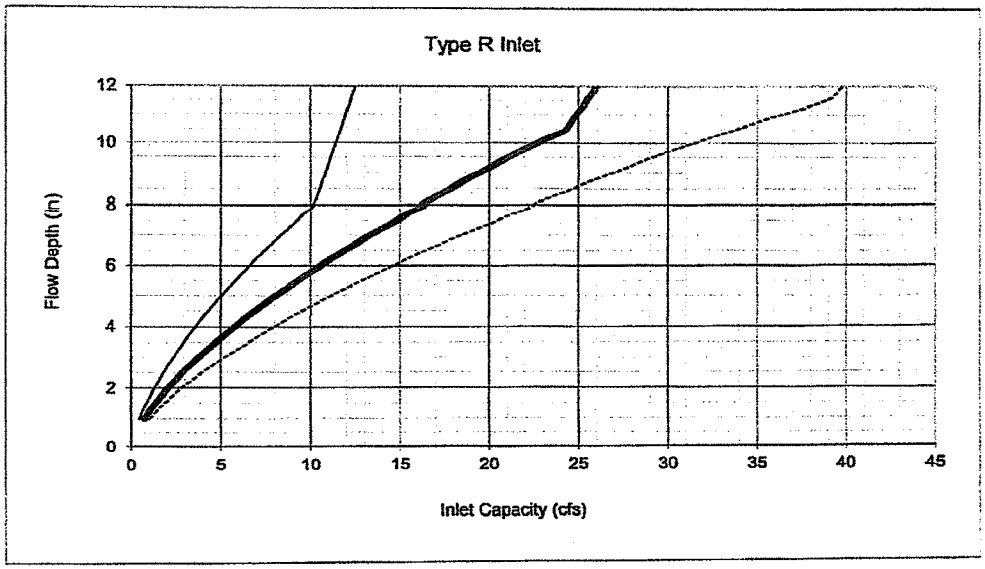

Inlet 16

5' Inlet 10' Inlet 15' Inlet

Q_5 = 1.5 cfs; d = 2¼"

Q_{100} = 3.7 cfs; d = 4.1"

Note:

1. The Town of Parker standard inlet parameters must apply to use this chart. See the Roadway Manual.

INLET CAPACITY CHART SUMP CONDITIONS

CURB OPENING (TYPE R) INLET

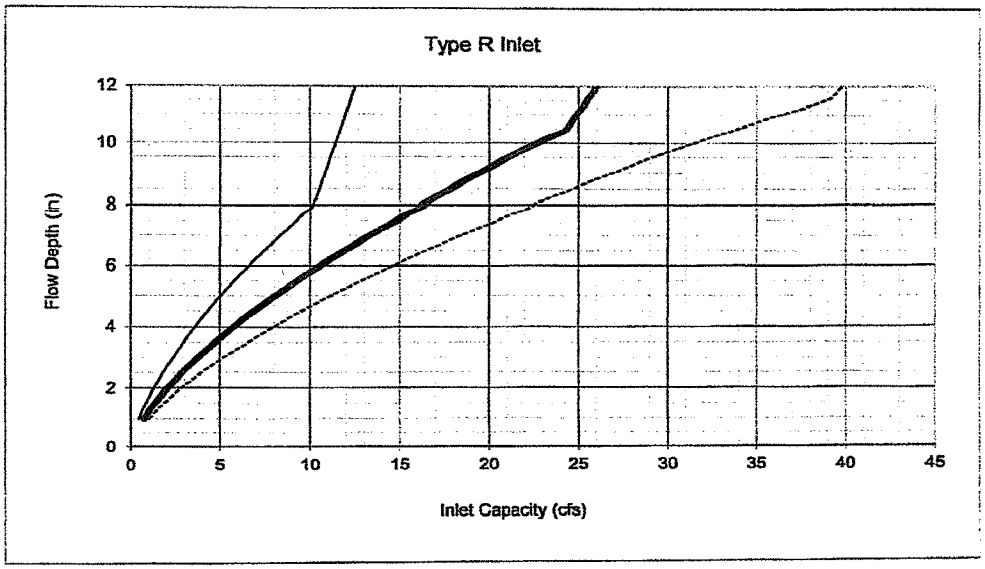

Inlet 17

5' Inlet 10' Inlet 15' Inlet

$Q_5 = 1.9$ cfs; d = 2 3/4"

$Q_{100} = 3.9$ cfs; d = 4 1/2"

Note:

1. The Town of Parker standard inlet parameters must apply to use this chart. See the Roadway Manual.

Boondocks & Commercial Area
Summary Runoff Table
12/19/14

Basin ID	DP	Contributing Area (acres)	Percent Imperv. %	Runoff Coefficie C (5 yr)	C (100 yr)	Routed Flows 5 yr cfs	100 yr cfs	Comments
A.1	1	0.50	11	0.14	0.40	0.3	1.3	single Type C with close mesh grate
A.2	2	1.27	33	0.26	0.48	1.25	4.0	single Type C with close mesh grate
A.3	3	2.29	45	0.32	0.51	3.0	8.9	single Type C with close mesh grate
A.4	4	0.49	77	0.58	0.68	1.3	2.9	5' type R inlet
A.5	5	0.29	90	0.73	0.81	1.0	2.1	5' type R inlet
A.6	6	0.76	90	0.73	0.81	2.6	5.4	5' type R inlet
A.7	7	0.25	90	0.73	0.81	0.9	1.8	5' type R inlet
A.8	8	0.57	67	0.47	0.6	1.3	3	5' type R inlet
A.9	9	0.94	84	0.64	0.74	2.2	4.8	5' type R inlet
A.10	10	0.14	53	0.37	0.53	0.2	0.7	5' type R inlet
A.11	11	0.37	45	0.32	0.51	0.6	1.7	5' type R inlet
A.12	12	0.61	90	0.73	0.81	2.1	4.4	5' type R inlet
A.13	13	0.59	90	0.73	0.81	2.0	4.2	5' type R inlet
A.14	14	0.26	64	0.45	0.63	0.6	1.4	chase section to A.15
A.15		0.46	79	0.44	0.59	1.0	2.5	
Sum A.14+A.15	15	0.72				1.5	3.7	5' type R inlet
A.16		0.18	90	0.73	0.81	0.6	1.3	flow into basin A.17
A.17		0.25	90	0.73	0.81	0.9	1.8	
Sum A.16+A.17	16	0.43				1.4	2.9	5' type R inlet
A.18	17	0.55	90	0.73	0.81	1.9	3.9	future 5' type R with Commercail construction
A.19	18	0.40	90	0.73	0.81	1.4	2.9	future 5' type R with Commercail construction
A.20	19	0.44	90	0.73	0.81	1.5	3.1	future 5' type R with Commercail construction
A.21	20	1.18	90	0.73	0.81	4.1	8.4	future 5' type R with Commercail construction
B.1	21	0.56	36	0.28	0.48	0.7	2.3	flow into Basin B.2 in curb
B.2		1.30	64	0.45	0.63	2.3	6	includes flow from B.1
Sum B.1+B.2	22	1.86				2.8	7.5	To be added with (B.3+B.4)
B.3	23	0.73	82	0.45	0.63	1.4	3.7	flow into Basin B.4 in curb
B.4		0.71	52	0.36	0.63	1.2	3.9	includes flow from B.3
Sum B.3+B.4	24	1.44				2.3	6.5	To be added with (B.1+B.2)
Sum B.1-B.4	25	0.14				2.2	13.8	sum flow into exist. 10' type R

C.18

APPENDIX D

Storm Sewer Hydraulic Calculations

STORM DRAINAGE SYSTEM DESIGN
(RATIONAL METHOD PROCEDURE)

MM&D Engineering Services, Inc.

Calculated by WEM
Date 11/7/2014
Revised I = (28.5Pi)/(10+tc)^0.786

Job num. 13-343
Project Boondocks & Commercial Property
Design Storm 5 year I = 1.39

STREET	DESIGN POINT	AREA DESIGN	AREA (acre)	RUNOFF COEF.	DIRECT RUNOFF tc min.	DIRECT RUNOFF C * A	DIRECT RUNOFF I in/hr	DIRECT RUNOFF Q cfs	TOTAL RUNOFF tc min.	TOTAL RUNOFF C * A (sum)	TOTAL RUNOFF I in/hr	TOTAL RUNOFF Q cfs	COMMENTS
	Developed Basins												
		5 year runoff											
DP 1 through 6	Sum AC = AC(DP 1 - DP 6) = 2.17								Tc = Longest Tc (DP 2) + travel = 11.9 + 433'/3 fps= 14.3				
Total Flow into existing storm					14.3	2.17	3.2	7.0					
Pipe from 9 to 10	Sum AC = AC(DP 8 - DP 9) = 0.87								Tc = Longest Tc (DP 9) = 10.3				
					10.3	0.87	3.7	3.2					
Pipe from 10 to 11	Sum AC = AC(DP 9 + DP10) = 0.87 + 0.05 = 0.92								Tc = Longest Tc (DP 9) + travel = 10.3 + 45/3fps = 10.6				
					10.6	0.92	3.7	3.4					
Pipe from 11 to 12	Sum AC = AC(DP 10 + DP11) = 0.92 + 0.12 = 1.04								Tc = Longest Tc (DP 10) + travel = 10.6 + 155/3fps = 11.5				
					11.5	1.04	3.6	3.7					
Pipe from 11 to 12	Sum AC = AC(DP 11 + DP12) = 1.04 + 0.45 = 1.49								Tc = Longest Tc (DP 11) + travel = 11.5 + 120/3fps = 12.2				
					12.2	1.49	3.5	5.2					
Pipe from 12 to 13	Sum AC = AC(DP 12) = 1.49								Tc = Longest Tc (DP 12) + travel = 12.2 + 100/3fps = 12.7				
					12.7	1.49	3.4	5.1					
Pipe from 15 to 13	Sum AC = AC(DP 15) = 0.44								Tc = Longest Tc (DP 15) + travel = 6.0 + 45/3fps = 6.3				
					6.3	0.44	4.4	1.9					
Pipe from 13 to 16	Sum AC = AC(DP 15 + DP 12) = 0.44 + 1.49 = 1.93								Tc = Longest Tc (DP 13) + travel = 12.7 + 150/3fps = 13.5				
					13.5	1.93	3.3	6.4					

STORM DRAINAGE SYSTEM DESIGN
(RATIONAL METHOD PROCEDURE)

MM&D Engineering Services, Inc.

Calculated by WEM
Date 11/07/14
Revised I = (28.5Pi)/(10+tc)^0.786

Job num. 13-343
Project Boondocks & Commercial Property
Design Storm 5 year I = 1.39

STREET	DESIGN POINT	AREA DESIGN	AREA (acre)	RUNOFF COEF.	DIRECT RUNOFF tc min.	DIRECT RUNOFF C * A	DIRECT RUNOFF I in/hr	DIRECT RUNOFF Q cfs	TOTAL RUNOFF tc min.	TOTAL RUNOFF C * A (sum)	TOTAL RUNOFF I in/hr	TOTAL RUNOFF Q cfs	COMMENTS
	Developed Basins 5 year runoff												
Pipe from 16 to 17	Sum AC = AC(DP 13 + DP 16) = 1.93 + 0.35 = 2.28				14.2	2.28	3.2	7.4					Tc = Longest Tc (DP 15) + travel = 13.5 + 130/3fps = 14.2
Pipe from 17 to 17A	Sum AC = AC(DP 16 + DP 18) = 2.28 + 0.32 = 2.60				14.6	2.60	3.2	8.3					Tc = Longest Tc (DP 17) + travel = 14.2 + 76/3fps = 14.6
Pipe from 7 to 17A	Sum AC = AC(DP 7) = 0.18				5.3	0.18	4.6	0.8					Tc = Longest Tc (DP 7) + travel = 5 + 55/3fps = 5.3
Pipe from 17A to 17B	Sum AC = AC(DP 17A + DP17) = 0.18 + 2.60 = 2.78				15.5	2.78	3.1	8.6					Tc = Longest Tc (DP 17A) + travel = 14.6 + 158/3fps = 15.5
Pipe from 19 to 18	Sum AC = AC(DP 19) = 0.32				5.3	0.32	4.6	1.5					Tc = Longest Tc (DP 19) + travel = 5 + 55/3fps = 5.3
Pipe from 18 to 17B	Sum AC = AC(DP 19 + DP18) = 0.32 + 0.40 = 0.72				5.9	0.72	4.5	3.2					Tc = Longest Tc (DP 18) + travel = 5.3 + 105/3fps = 5.9
Total Flow to existing 42" RCP	Sum AC = AC(DP 17A to 17B + DP18 to 17B) = 0.72 + 2.78 = 3.50				**15.7**	**3.50**	**3.1**	**10.8**					Tc = Longest Tc (DP 17B) + travel = 15.5 + 42/3fps = 15.7

D.2

STORM DRAINAGE SYSTEM DESIGN
(RATIONAL METHOD PROCEDURE)

MM&D Engineering Services, Inc.

Calculated by WEM
Date 11/7/2014
Revised I = (28.5Pi)/(10+tc)^0.786

Job num. 13-343
Project Boondocks & Commercial Property
Design Storm 100 year I = 2.6

STREET	DESIGN POINT	AREA DESIGN	AREA (acre)	RUNOFF COEF.	DIRECT RUNOFF tc min.	DIRECT RUNOFF C * A	DIRECT RUNOFF I in/hr	DIRECT RUNOFF Q cfs	TOTAL RUNOFF tc min.	TOTAL RUNOFF C * A (sum)	TOTAL RUNOFF I in/hr	TOTAL RUNOFF Q cfs	COMMENTS
		Developed Basins											
		100 year runoff											
DP 1 through 6	Sum AC = AC(DP 1 - DP 6) = 3.16								Tc = Longest Tc (DP 2) + travel = 11.9 + 433'/3 fps= 14.3				
Total Flow into existing storm					14.3	3.16	6.0	19.1					
Pipe from 9 to 10	Sum AC = AC(DP 8 - DP 9) = 1.04								Tc = Longest Tc (DP 9) = 10.3				
					10.3	1.04	7.0	7.2					
Pipe from 10 to 11	Sum AC = AC(DP 9 + DP10) = 1.04 + 0.07 = 1.11								Tc = Longest Tc (DP 9) + travel = 10.3 + 45/3fps = 10.6				
					10.6	1.11	6.9	7.6					
Pipe from 11 to 12	Sum AC = AC(DP 10 + DP11) = 1.11 + 0.19 = 1.30								Tc = Longest Tc (DP 10) + travel = 10.6 + 155/3fps = 11.5				
					11.5	1.30	6.6	8.6					
Pipe from 11 to 12	Sum AC = AC(DP 11 + DP12) = 1.30 + 0.49 = 1.79								Tc = Longest Tc (DP 11) + travel = 11.5 + 120/3fps = 12.2				
					12.2	1.79	6.5	11.6					
Pipe from 12 to 13	Sum AC = AC(DP 12) = 1.79								Tc = Longest Tc (DP 12) + travel = 12.2 + 100/3fps = 12.7				
					12.7	1.79	6.4	11.4					
Pipe from 15 to 13	Sum AC = AC(DP 15) = 0.44								Tc = Longest Tc (DP 15) + travel = 6.0 + 45/3fps = 6.3				
					6.3	0.44	8.3	3.6					
Pipe from 13 to 16	Sum AC = AC(DP 15 + DP 12) = 0.44 + 1.78 = 2.22								Tc = Longest Tc (DP 13) + travel = 12.7 + 150/3fps = 13.5				
					13.5	2.22	6.2	13.8					

D3

STORM DRAINAGE SYSTEM DESIGN
(RATIONAL METHOD PROCEDURE)

MM&D Engineering Services, Inc.

Calculated by WEM
Date 11/07/14
Revised I = (28.5Pi)/(10+tc)^0.786

Job num. 13-343
Project Boondocks & Commercial Property
Design Storm 100 year I = 2.6

STREET	DESIGN POINT	AREA DESIGN	AREA (acre)	RUNOFF COEF.	DIRECT RUNOFF tc min.	DIRECT RUNOFF C * A	DIRECT RUNOFF I in/hr	DIRECT RUNOFF Q cfs	TOTAL RUNOFF tc min.	TOTAL RUNOFF C * A (sum)	TOTAL RUNOFF I in/hr	TOTAL RUNOFF Q cfs	COMMENTS
	Developed Basins 100 year runoff												
Pipe from 16 to 17	Sum AC = AC(DP 13 + DP 16) = 2.22 + 0.35 = 2.57				14.2	2.57	6.1	15.6	Tc = Longest Tc (DP 15) + travel = 13.5 + 130/3fps = 14.2				
Pipe from 17 to 17A	Sum AC = AC(DP 16 + DP 18) = 2.58 + 0.32 = 2.80				14.6	2.80	6.0	16.7	Tc = Longest Tc (DP 17) + travel = 14.2 + 76/3fps = 14.6				
Pipe from 7 to 17A	Sum AC = AC(DP 7) = 0.20				5.3	0.20	8.7	1.7	Tc = Longest Tc (DP 7) + travel = 5 + 55/3fps = 5.3				
Pipe from 17A to 17B	Sum AC = AC(DP 17A + DP17) = 0.20 + 2.80 = 3.00				15.5	3.00	5.8	17.4	Tc = Longest Tc (DP 17A) + travel = 14.6 + 158/3fps = 15.5				
Pipe from 19 to 18	Sum AC = AC(DP 19) = 0.36				5.3	0.36	8.7	3.1	Tc = Longest Tc (DP 19) + travel = 5 + 55/3fps = 5.3				
Pipe from 18 to 17B	Sum AC = AC(DP 19 + DP18) = 0.36 + 0.32 = 0.68				5.9	0.68	8.4	5.7	Tc = Longest Tc (DP 18) + travel = 5.3 + 105/3fps = 5.9				
Total Flow to existing 42" RCP	Sum AC = AC(DP 17A to 17B + DP18 to 17B) = 0.68 + 3.00 = 3.68				**15.7**	**3.68**	**5.8**	**21.3**	Tc = Longest Tc (DP 17B) + travel = 15.5 + 42/3fps = 15.7				

D.4

Circular Pipe Flow

Project: Boondocks
Pipe ID: DP 8 to DP 9

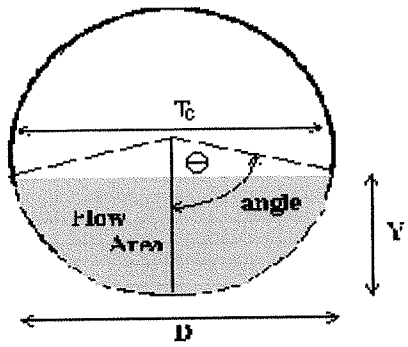

Design Information (Input)			
Pipe Invert Slope	So =	0.0068	ft/ft
Pipe Manning's n-value	n =	0.0130	
Pipe Diameter	D =	18.00	inches
Design discharge	**Q =**	**7.2**	**cfs**
Full-flow Capacity (Calculated)			
Full-flow area	Af =	1.77	sq ft
Full-flow wetted perimeter	Pf =	4.71	ft
Half Central Angle	Theta =	3.14	rad
Full-flow capacity	**Qf =**	**8.7**	cfs
Calculation of Normal Flow Condition			
Half Central Angle (0<Theta<3.14)	Theta =	1.97	rad
Flow area	An =	1.31	sq ft
Top width	Tn =	1.38	ft
Wetted perimeter	Pn =	2.96	ft
Flow depth	Yn =	1.04	ft
Flow velocity	Vn =	5.49	fps
Discharge	**Qn =**	**7.2**	**cfs**
Normal Depth Froude Number	**Fr_n =**	**0.99**	
Calculation of Critical Flow Condition			
Half Central Angle (0<Theta-c<3.14)	Theta-c =	1.97	rad
Critical flow area	Ac =	1.31	sq ft
Critical top width	Tc =	1.38	ft
Critical flow depth	Yc =	1.04	ft
Critical flow velocity	Vc =	5.51	fps
Critical Depth Froude Number	**Fr_c =**	**1.00**	

D.5

Circular Pipe Flow

Project: Boondocks
Pipe ID: DP 9 to DP 10

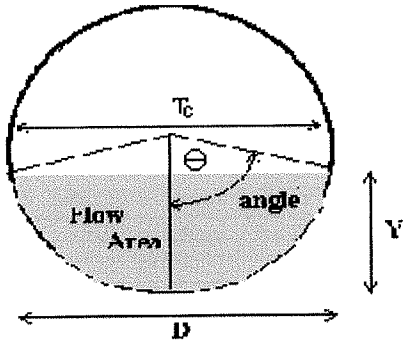

Design Information (Input)			
Pipe Invert Slope	So =	0.0068	ft/ft
Pipe Manning's n-value	n =	0.0130	
Pipe Diameter	D =	18.00	inches
Design discharge	**Q =**	**7.2**	**cfs**
Full-flow Capacity (Calculated)			
Full-flow area	Af =	1.77	sq ft
Full-flow wetted perimeter	Pf =	4.71	ft
Half Central Angle	Theta =	3.14	rad
Full-flow capacity	**Qf =**	**8.7**	cfs
Calculation of Normal Flow Condition			
Half Central Angle (0<Theta<3.14)	Theta =	1.97	rad
Flow area	An =	1.31	sq ft
Top width	Tn =	1.38	ft
Wetted perimeter	Pn =	2.96	ft
Flow depth	Yn =	1.04	ft
Flow velocity	Vn =	5.49	fps
Discharge	**Qn =**	**7.2**	**cfs**
Normal Depth Froude Number	**Fr_n =**	**0.99**	
Calculation of Critical Flow Condition			
Half Central Angle (0<Theta-c<3.14)	Theta-c =	1.97	rad
Critical flow area	Ac =	1.31	sq ft
Critical top width	Tc =	1.38	ft
Critical flow depth	Yc =	1.04	ft
Critical flow velocity	Vc =	5.51	fps
Critical Depth Froude Number	**Fr_c =**	**1.00**	

D.6

Circular Pipe Flow

Project: Boondocks
Pipe ID: DP 10 to DP 11

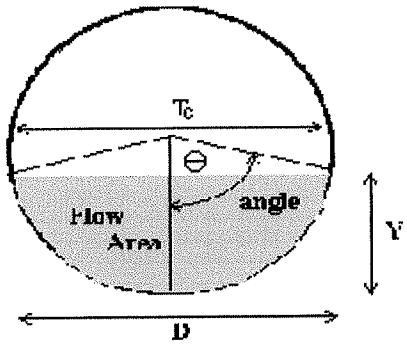

Design Information (Input)			
Pipe Invert Slope	So =	0.0068	ft/ft
Pipe Manning's n-value	n =	0.0130	
Pipe Diameter	D =	18.00	inches
Design discharge	**Q =**	**7.6**	**cfs**
Full-flow Capacity (Calculated)			
Full-flow area	Af =	1.77	sq ft
Full-flow wetted perimeter	Pf =	4.71	ft
Half Central Angle	Theta =	3.14	rad
Full-flow capacity	**Qf =**	**8.7**	cfs
Calculation of Normal Flow Condition			
Half Central Angle (0<Theta<3.14)	Theta =	2.04	rad
Flow area	An =	1.37	sq ft
Top width	Tn =	1.34	ft
Wetted perimeter	Pn =	3.06	ft
Flow depth	Yn =	1.09	ft
Flow velocity	Vn =	5.54	fps
Discharge	**Qn =**	**7.6**	**cfs**
Normal Depth Froude Number	**Fr_n =**	**0.97**	
Calculation of Critical Flow Condition			
Half Central Angle (0<Theta-c<3.14)	Theta-c =	2.01	rad
Critical flow area	Ac =	1.35	sq ft
Critical top width	Tc =	1.36	ft
Critical flow depth	Yc =	1.07	ft
Critical flow velocity	Vc =	5.65	fps
Critical Depth Froude Number	**Fr_c =**	**1.00**	

Circular Pipe Flow

Project: Boondocks
Pipe ID: DP 11 to DP 12

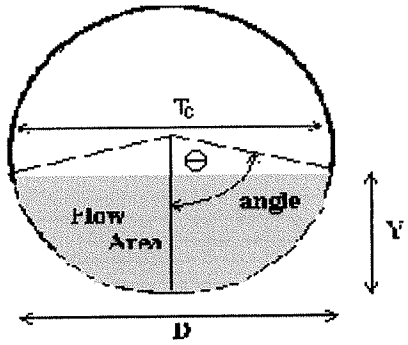

Design Information (Input)			
Pipe Invert Slope	So =	0.0068	ft/ft
Pipe Manning's n-value	n =	0.0130	
Pipe Diameter	D =	18.00	inches
Design discharge	**Q =**	**8.6**	**cfs**
Full-flow Capacity (Calculated)			
Full-flow area	Af =	1.77	sq ft
Full-flow wetted perimeter	Pf =	4.71	ft
Half Central Angle	Theta =	3.14	rad
Full-flow capacity	**Qf =**	**8.7**	cfs
Calculation of Normal Flow Condition			
Half Central Angle (0<Theta<3.14)	Theta =	2.24	rad
Flow area	An =	1.54	sq ft
Top width	Tn =	1.17	ft
Wetted perimeter	Pn =	3.36	ft
Flow depth	Yn =	1.22	ft
Flow velocity	Vn =	5.60	fps
Discharge	**Qn =**	**8.6**	**cfs**
Normal Depth Froude Number	**Fr_n =**	**0.86**	
Calculation of Critical Flow Condition			
Half Central Angle (0<Theta-c<3.14)	Theta-c =	2.11	rad
Critical flow area	Ac =	1.44	sq ft
Critical top width	Tc =	1.29	ft
Critical flow depth	Yc =	1.14	ft
Critical flow velocity	Vc =	5.99	fps
Critical Depth Froude Number	**Fr_c =**	**1.00**	

D.8

Circular Pipe Flow

Project: Boondocks
Pipe ID: DP 11 to DP 12A

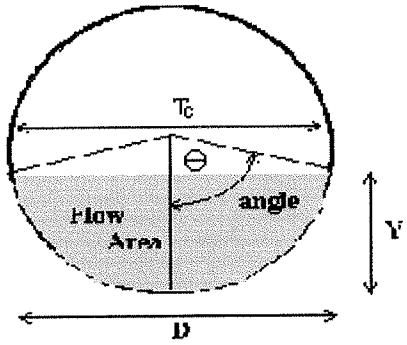

Design Information (Input)			
Pipe Invert Slope	So =	0.0160	ft/ft
Pipe Manning's n-value	n =	0.0130	
Pipe Diameter	D =	18.00	inches
Design discharge	**Q =**	**11.6**	**cfs**
Full-flow Capacity (Calculated)			
Full-flow area	Af =	1.77	sq ft
Full-flow wetted perimeter	Pf =	4.71	ft
Half Central Angle	Theta =	3.14	rad
Full-flow capacity	**Qf =**	**13.3**	cfs
Calculation of Normal Flow Condition			
Half Central Angle (0<Theta<3.14)	Theta =	2.03	rad
Flow area	An =	1.37	sq ft
Top width	Tn =	1.34	ft
Wetted perimeter	Pn =	3.05	ft
Flow depth	Yn =	1.08	ft
Flow velocity	Vn =	8.49	fps
Discharge	**Qn =**	**11.6**	**cfs**
Normal Depth Froude Number	**Fr_n =**	**1.48**	
Calculation of Critical Flow Condition			
Half Central Angle (0<Theta-c<3.14)	Theta-c =	2.39	rad
Critical flow area	Ac =	1.62	sq ft
Critical top width	Tc =	1.03	ft
Critical flow depth	Yc =	1.30	ft
Critical flow velocity	Vc =	7.14	fps
Critical Depth Froude Number	**Fr_c =**	**1.00**	

D.9

Circular Pipe Flow

Project: Boondocks
Pipe ID: DP 15 to DP 13

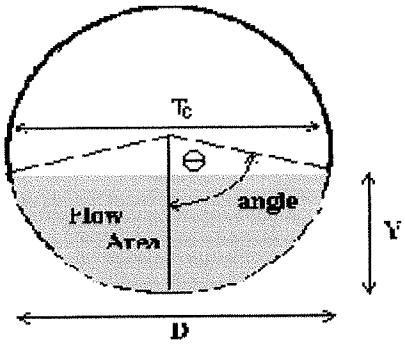

Design Information (Input)			
Pipe Invert Slope	So =	0.0040	ft/ft
Pipe Manning's n-value	n =	0.0130	
Pipe Diameter	D =	18.00	inches
Design discharge	**Q =**	**3.6**	**cfs**
Full-flow Capacity (Calculated)			
Full-flow area	Af =	1.77	sq ft
Full-flow wetted perimeter	Pf =	4.71	ft
Half Central Angle	Theta =	3.14	rad
Full-flow capacity	**Qf =**	**6.7**	cfs
Calculation of Normal Flow Condition			
Half Central Angle (0<Theta<3.14)	Theta =	1.62	rad
Flow area	An =	0.94	sq ft
Top width	Tn =	1.50	ft
Wetted perimeter	Pn =	2.43	ft
Flow depth	Yn =	0.79	ft
Flow velocity	Vn =	3.84	fps
Discharge	**Qn =**	**3.6**	**cfs**
Normal Depth Froude Number	**Fr_n =**	**0.86**	
Calculation of Critical Flow Condition			
Half Central Angle (0<Theta-c<3.14)	Theta-c =	1.54	rad
Critical flow area	Ac =	0.85	sq ft
Critical top width	Tc =	1.50	ft
Critical flow depth	Yc =	0.72	ft
Critical flow velocity	Vc =	4.26	fps
Critical Depth Froude Number	**Fr_c =**	**1.00**	

D.10

Circular Pipe Flow

Project: Boondocks
Pipe ID: DP 13 to DP 16

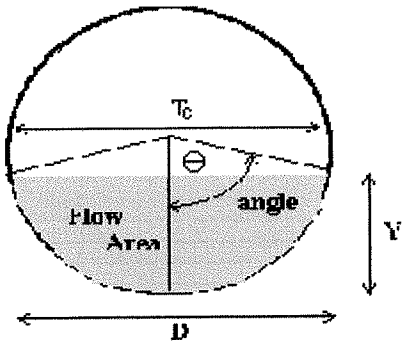

Design Information (Input)			
Pipe Invert Slope	So =	0.0200	ft/ft
Pipe Manning's n-value	n =	0.0130	
Pipe Diameter	D =	18.00	inches
Design discharge	**Q =**	**13.8**	**cfs**
Full-flow Capacity (Calculated)			
Full-flow area	Af =	1.77	sq ft
Full-flow wetted perimeter	Pf =	4.71	ft
Half Central Angle	Theta =	3.14	rad
Full-flow capacity	**Qf =**	**14.9**	cfs
Calculation of Normal Flow Condition			
Half Central Angle (0<Theta<3.14)	Theta =	2.12	rad
Flow area	An =	1.44	sq ft
Top width	Tn =	1.28	ft
Wetted perimeter	Pn =	3.18	ft
Flow depth	Yn =	1.14	ft
Flow velocity	Vn =	9.57	fps
Discharge	**Qn =**	**13.8**	**cfs**
Normal Depth Froude Number	**Fr_n =**	**1.59**	
Calculation of Critical Flow Condition			
Half Central Angle (0<Theta-c<3.14)	Theta-c =	2.56	rad
Critical flow area	Ac =	1.70	sq ft
Critical top width	Tc =	0.83	ft
Critical flow depth	Yc =	1.38	ft
Critical flow velocity	Vc =	8.13	fps
Critical Depth Froude Number	**Fr_c =**	**1.00**	

D.11

Circular Pipe Flow

Project: Boondocks
Pipe ID: DP 16 to DP 17

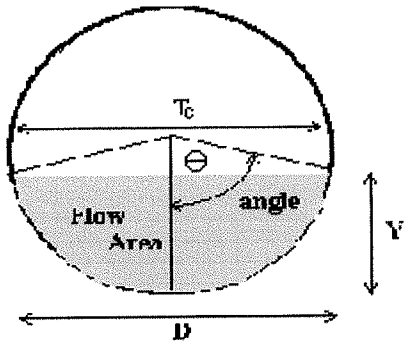

Design Information (Input)			
Pipe Invert Slope	So =	0.0240	ft/ft
Pipe Manning's n-value	n =	0.0130	
Pipe Diameter	D =	18.00	inches
Design discharge	**Q =**	**15.6**	**cfs**
Full-flow Capacity (Calculated)			
Full-flow area	Af =	1.77	sq ft
Full-flow wetted perimeter	Pf =	4.71	ft
Half Central Angle	Theta =	3.14	rad
Full-flow capacity	**Qf =**	**16.3**	cfs
Calculation of Normal Flow Condition			
Half Central Angle (0<Theta<3.14)	Theta =	2.17	rad
Flow area	An =	1.48	sq ft
Top width	Tn =	1.24	ft
Wetted perimeter	Pn =	3.26	ft
Flow depth	Yn =	1.17	ft
Flow velocity	Vn =	10.51	fps
Discharge	**Qn =**	**15.6**	**cfs**
Normal Depth Froude Number	**Fr_n =**	**1.69**	
Calculation of Critical Flow Condition			
Half Central Angle (0<Theta-c<3.14)	Theta-c =	2.67	rad
Critical flow area	Ac =	1.73	sq ft
Critical top width	Tc =	0.68	ft
Critical flow depth	Yc =	1.42	ft
Critical flow velocity	Vc =	9.02	fps
Critical Depth Froude Number	**Fr_c =**	**1.00**	

D.12

Circular Pipe Flow

Project: Boondocks
Pipe ID: DP 17 to DP 17A

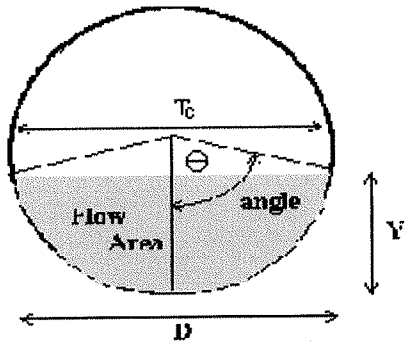

Design Information (Input)			
Pipe Invert Slope	So =	0.0260	ft/ft
Pipe Manning's n-value	n =	0.0130	
Pipe Diameter	D =	18.00	inches
Design discharge	**Q =**	**16.7**	**cfs**
Full-flow Capacity (Calculated)			
Full-flow area	Af =	1.77	sq ft
Full-flow wetted perimeter	Pf =	4.71	ft
Half Central Angle	Theta =	3.14	rad
Full-flow capacity	**Qf =**	**17.0**	cfs
Calculation of Normal Flow Condition			
Half Central Angle (0<Theta<3.14)	Theta =	2.23	rad
Flow area	An =	1.52	sq ft
Top width	Tn =	1.19	ft
Wetted perimeter	Pn =	3.34	ft
Flow depth	Yn =	1.21	ft
Flow velocity	Vn =	10.95	fps
Discharge	**Qn =**	**16.7**	**cfs**
Normal Depth Froude Number	**Fr_n =**	**1.70**	
Calculation of Critical Flow Condition			
Half Central Angle (0<Theta-c<3.14)	Theta-c =	2.72	rad
Critical flow area	Ac =	1.74	sq ft
Critical top width	Tc =	0.61	ft
Critical flow depth	Yc =	1.44	ft
Critical flow velocity	Vc =	9.59	fps
Critical Depth Froude Number	**Fr_c =**	**1.00**	

D.13

Circular Pipe Flow

Project: Boondocks
Pipe ID: DP 7 to DP 17A

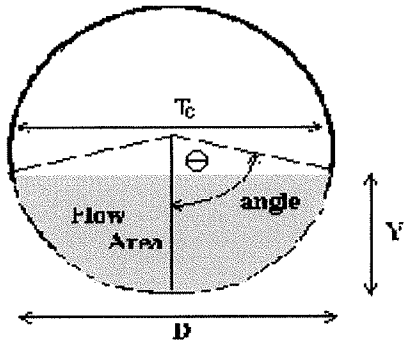

Design Information (Input)			
Pipe Invert Slope	So =	0.0040	ft/ft
Pipe Manning's n-value	n =	0.0130	
Pipe Diameter	D =	18.00	inches
Design discharge	**Q =**	**1.7**	**cfs**
Full-flow Capacity (Calculated)			
Full-flow area	Af =	1.77	sq ft
Full-flow wetted perimeter	Pf =	4.71	ft
Half Central Angle	Theta =	3.14	rad
Full-flow capacity	**Qf =**	**6.7**	cfs
Calculation of Normal Flow Condition			
Half Central Angle (0<Theta<3.14)	Theta =	1.26	rad
Flow area	An =	0.54	sq ft
Top width	Tn =	1.43	ft
Wetted perimeter	Pn =	1.88	ft
Flow depth	Yn =	0.52	ft
Flow velocity	Vn =	3.15	fps
Discharge	**Qn =**	**1.7**	**cfs**
Normal Depth Froude Number	**Fr_n =**	**0.90**	
Calculation of Critical Flow Condition			
Half Central Angle (0<Theta-c<3.14)	Theta-c =	1.22	rad
Critical flow area	Ac =	0.50	sq ft
Critical top width	Tc =	1.41	ft
Critical flow depth	Yc =	0.49	ft
Critical flow velocity	Vc =	3.39	fps
Critical Depth Froude Number	**Fr_c =**	**1.00**	

D.14

Circular Pipe Flow

Project: Boondocks
Pipe ID: DP 17A to DP 17B

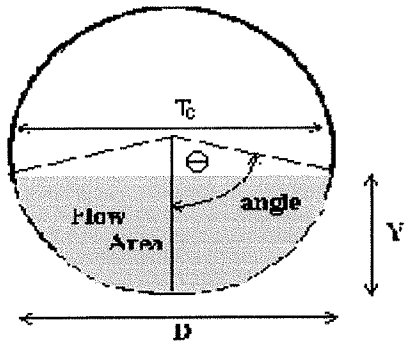

Design Information (Input)			
Pipe Invert Slope	So =	0.0260	ft/ft
Pipe Manning's n-value	n =	0.0130	
Pipe Diameter	D =	24.00	inches
Design discharge	**Q =**	**17.4**	**cfs**
Full-flow Capacity (Calculated)			
Full-flow area	Af =	3.14	sq ft
Full-flow wetted perimeter	Pf =	6.28	ft
Half Central Angle	Theta =	3.14	rad
Full-flow capacity	**Qf =**	**36.6**	cfs
Calculation of Normal Flow Condition			
Half Central Angle (0<Theta<3.14)	Theta =	1.54	rad
Flow area	An =	1.52	sq ft
Top width	Tn =	2.00	ft
Wetted perimeter	Pn =	3.09	ft
Flow depth	Yn =	0.97	ft
Flow velocity	Vn =	11.48	fps
Discharge	**Qn =**	**17.4**	**cfs**
Normal Depth Froude Number	**Fr_n =**	**2.32**	
Calculation of Critical Flow Condition			
Half Central Angle (0<Theta-c<3.14)	Theta-c =	2.10	rad
Critical flow area	Ac =	2.53	sq ft
Critical top width	Tc =	1.73	ft
Critical flow depth	Yc =	1.50	ft
Critical flow velocity	Vc =	6.87	fps
Critical Depth Froude Number	**Fr_c =**	**1.00**	

D.15

Circular Pipe Flow

Project: Boondocks
Pipe ID: DP 19 to DP 18

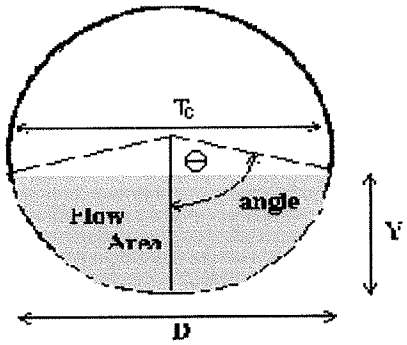

Design Information (Input)			
Pipe Invert Slope	So =	0.0040	ft/ft
Pipe Manning's n-value	n =	0.0130	
Pipe Diameter	D =	18.00	inches
Design discharge	**Q =**	**3.1**	**cfs**
Full-flow Capacity (Calculated)			
Full-flow area	Af =	1.77	sq ft
Full-flow wetted perimeter	Pf =	4.71	ft
Half Central Angle	Theta =	3.14	rad
Full-flow capacity	**Qf =**	**6.7**	cfs
Calculation of Normal Flow Condition			
Half Central Angle (0<Theta<3.14)	Theta =	1.53	rad
Flow area	An =	0.84	sq ft
Top width	Tn =	1.50	ft
Wetted perimeter	Pn =	2.30	ft
Flow depth	Yn =	0.72	ft
Flow velocity	Vn =	3.70	fps
Discharge	**Qn =**	**3.1**	**cfs**
Normal Depth Froude Number	**Fr_n =**	**0.87**	
Calculation of Critical Flow Condition			
Half Central Angle (0<Theta-c<3.14)	Theta-c =	1.46	rad
Critical flow area	Ac =	0.76	sq ft
Critical top width	Tc =	1.49	ft
Critical flow depth	Yc =	0.67	ft
Critical flow velocity	Vc =	4.06	fps
Critical Depth Froude Number	**Fr_c =**	**1.00**	

D.16

Circular Pipe Flow

Project: Boondocks
Pipe ID: DP 18 to DP 17B

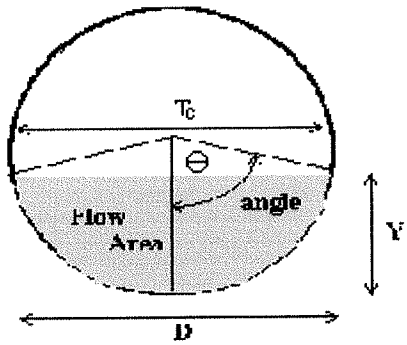

Design Information (Input)			
Pipe Invert Slope	So =	0.0040	ft/ft
Pipe Manning's n-value	n =	0.0130	
Pipe Diameter	D =	18.00	inches
Design discharge	**Q =**	**5.7**	**cfs**
Full-flow Capacity (Calculated)			
Full-flow area	Af =	1.77	sq ft
Full-flow wetted perimeter	Pf =	4.71	ft
Half Central Angle	Theta =	3.14	rad
Full-flow capacity	**Qf =**	**6.7**	cfs
Calculation of Normal Flow Condition			
Half Central Angle (0<Theta<3.14)	Theta =	2.01	rad
Flow area	An =	1.35	sq ft
Top width	Tn =	1.36	ft
Wetted perimeter	Pn =	3.01	ft
Flow depth	Yn =	1.07	ft
Flow velocity	Vn =	4.23	fps
Discharge	**Qn =**	**5.7**	**cfs**
Normal Depth Froude Number	**Fr_n =**	**0.75**	
Calculation of Critical Flow Condition			
Half Central Angle (0<Theta-c<3.14)	Theta-c =	1.80	rad
Critical flow area	Ac =	1.14	sq ft
Critical top width	Tc =	1.46	ft
Critical flow depth	Yc =	0.92	ft
Critical flow velocity	Vc =	5.01	fps
Critical Depth Froude Number	**Fr_c =**	**1.00**	

D.17

Circular Pipe Flow

Project: Boondocks
Pipe ID: DP 17B to 42 '

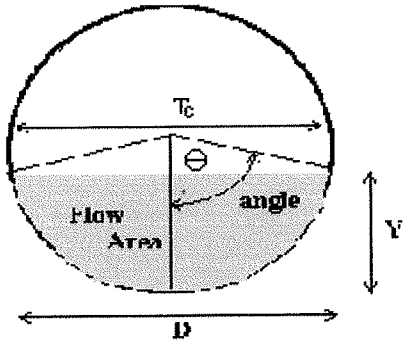

Design Information (Input)			
Pipe Invert Slope	So =	0.0050	ft/ft
Pipe Manning's n-value	n =	0.0130	
Pipe Diameter	D =	42.00	inches
Design discharge	**Q =**	**21.3**	**cfs**
Full-flow Capacity (Calculated)			
Full-flow area	Af =	9.62	sq ft
Full-flow wetted perimeter	Pf =	11.00	ft
Half Central Angle	Theta =	3.14	rad
Full-flow capacity	**Qf =**	**71.3**	cfs
Calculation of Normal Flow Condition			
Half Central Angle (0<Theta<3.14)	Theta =	1.32	rad
Flow area	An =	3.29	sq ft
Top width	Tn =	3.39	ft
Wetted perimeter	Pn =	4.61	ft
Flow depth	Yn =	1.31	ft
Flow velocity	Vn =	6.47	fps
Discharge	**Qn =**	**21.3**	**cfs**
Normal Depth Froude Number	**Fr_n =**	**1.16**	
Calculation of Critical Flow Condition			
Half Central Angle (0<Theta-c<3.14)	Theta-c =	1.38	rad
Critical flow area	Ac =	3.65	sq ft
Critical top width	Tc =	3.44	ft
Critical flow depth	Yc =	1.42	ft
Critical flow velocity	Vc =	5.84	fps
Critical Depth Froude Number	**Fr_c =**	**1.00**	

D.18

Circular Pipe Flow

Project: Boondocks
Pipe ID: DP 17B to 30"

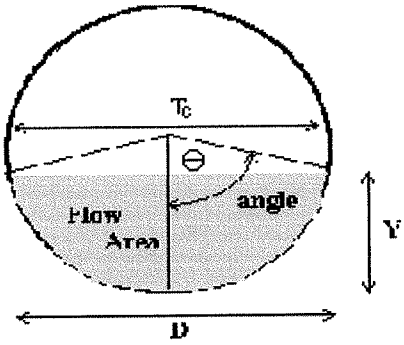

Design Information (Input)			
Pipe Invert Slope	So =	0.0050	ft/ft
Pipe Manning's n-value	n =	0.0130	
Pipe Diameter	D =	30.00	inches
Design discharge	**Q =**	**21.3**	**cfs**
Full-flow Capacity (Calculated)			
Full-flow area	Af =	4.91	sq ft
Full-flow wetted perimeter	Pf =	7.85	ft
Half Central Angle	Theta =	3.14	rad
Full-flow capacity	**Qf =**	**29.1**	cfs
Calculation of Normal Flow Condition			
Half Central Angle (0<Theta<3.14)	Theta =	1.85	rad
Flow area	An =	3.29	sq ft
Top width	Tn =	2.41	ft
Wetted perimeter	Pn =	4.62	ft
Flow depth	Yn =	1.59	ft
Flow velocity	Vn =	6.47	fps
Discharge	**Qn =**	**21.3**	**cfs**
Normal Depth Froude Number	**Fr_n =**	**0.97**	
Calculation of Critical Flow Condition			
Half Central Angle (0<Theta-c<3.14)	Theta-c =	1.83	rad
Critical flow area	Ac =	3.24	sq ft
Critical top width	Tc =	2.42	ft
Critical flow depth	Yc =	1.57	ft
Critical flow velocity	Vc =	6.57	fps
Critical Depth Froude Number	**Fr_c =**	**1.00**	

D.19

Design of Trapezoidal Grass-Lined Channel

Project: Channle across Lot 2
Channel ID:

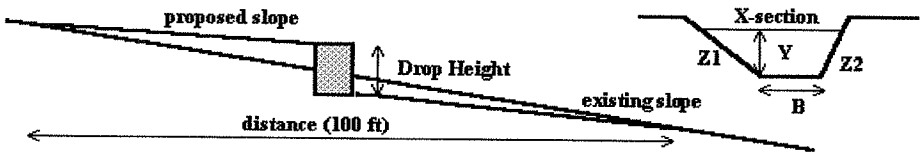

Existing Channel Condition (Input)			
Design Discharge	Q_D=	37.30	cfs
Design Discharge Return Period	$Year_D$=	100	years
Existing Ground Slope Along Channel Centerline	So =	0.0094	ft/ft
100-Year Discharge	**Q_{100}=**	**37.30**	cfs
Left Side Slope	Z1 =	4.00	ft/ft
Right Side Slope	Z2 =	4.00	ft/ft
Channel Manning's N (New Condition .030 typ.)	N_{new}=	0.030	
Channel Manning's N (Mature Condition .040 typ.)	N_{mature}=	0.040	
Check one of the following soil types			
	Sandy Soil		check, OR
	Non-Sandy Soil	X	check

Proposed Channel Condition (Calculated)		New Channel		Mature Channel	
Bottom Width	B=	0.00	ft	0.00	ft
100-Year Flow Depth (5' maximum)	**Y_{100}=**	**1.54**	**ft**	**1.71**	**ft**
100-Year Flow Velocity	**V_{100}=**	**3.95**	**fps**	**3.19**	**fps**
100-Year Top Width	T=	12.29	ft	13.68	ft
100-Year Flow Area	A=	9.44	sq ft	11.70	sq ft
100-Year Froude Number	**Fr =**	**0.79**		**0.61**	
100-Year Wetted Perimeter	P=	12.67	ft	14.10	ft
100-Year Hydarulic Radius	R=	0.75	ft	0.83	ft
Design Discharge Flow Depth	Y_D=	**1.54**	**ft**	**1.71**	ft
Design Discharge Flow Velocity	V_D=	**3.95**	**fps**	**3.19**	fps
Design Discharge Top Width	T=	12.29	ft	13.68	ft
Design Discharge Flow Area	A=	9.44	sq ft	11.70	sq ft
Design Discharge Froude Number	**Fr =**	**0.79**		**0.61**	
Design Discharge Wetted Perimeter	P=	12.67	ft	14.10	ft
Design Discharge Hydarulic Radius	R=	0.75	ft	0.83	ft
Drop Height					
Proposed New Channel Slope	Sd=	0.0094	ft/ft	0.0094	ft/ft
Drop Height per 100 ft	D =	0.00	ft/100 ft	0.00	ft/100 ft

Analysis of Trapezoidal Grass-Lined Channel

Project: Outflow channel across lot 2
Channel ID:

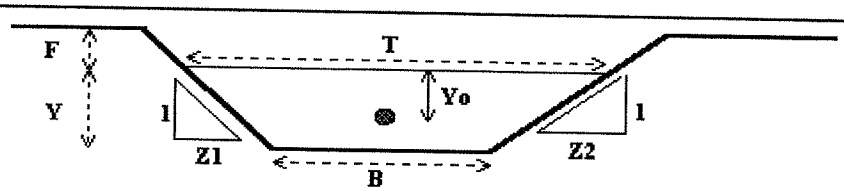

Design Information

Grass Type:	A	B	C	D	E
Limiting Manning's n	0.060	0.040	0.033	0.030	0.024

Soil Type:	Max. Velocity (V_{max})	Max. Froude No. (F_{max})
Non-Sandy	7.0 fps	0.80
Sandy	5.0 fps	0.60

Design Information			
Enter Grass Manning's n	n =	0.030	
Type of Grass (A,B,C,D, or E)		D	
Channel Invert Slope	So =	0.0094	ft/ft
Bottom Width	B =	5.00	ft
Left Side Slope	Z1 =	4.00	ft/ft
Right Side Slope	Z2 =	4.00	ft/ft
Design Discharge	**Q =**	**37.30**	**cfs**
Check one of the following soil types			
	Sandy Soil		check, OR
	Non-Sandy Soil	X	check

Flow Condition (Calculated)			
Water Depth	**Y =**	**1.06**	**ft**
Top Width	T =	13.44	ft
Flow Area	A =	9.73	sq ft
Wetted Perimeter	P =	13.70	ft
Hydraulic Radius	R =	0.71	ft
Flow Velocity	V =	3.83	fps
Hydraulic Depth	D =	0.72	ft
Froude Number	**Fr =**	**0.79**	
Discharge (Check)	**Q=**	**37.30**	**cfs**

D.26

Scenario: Base

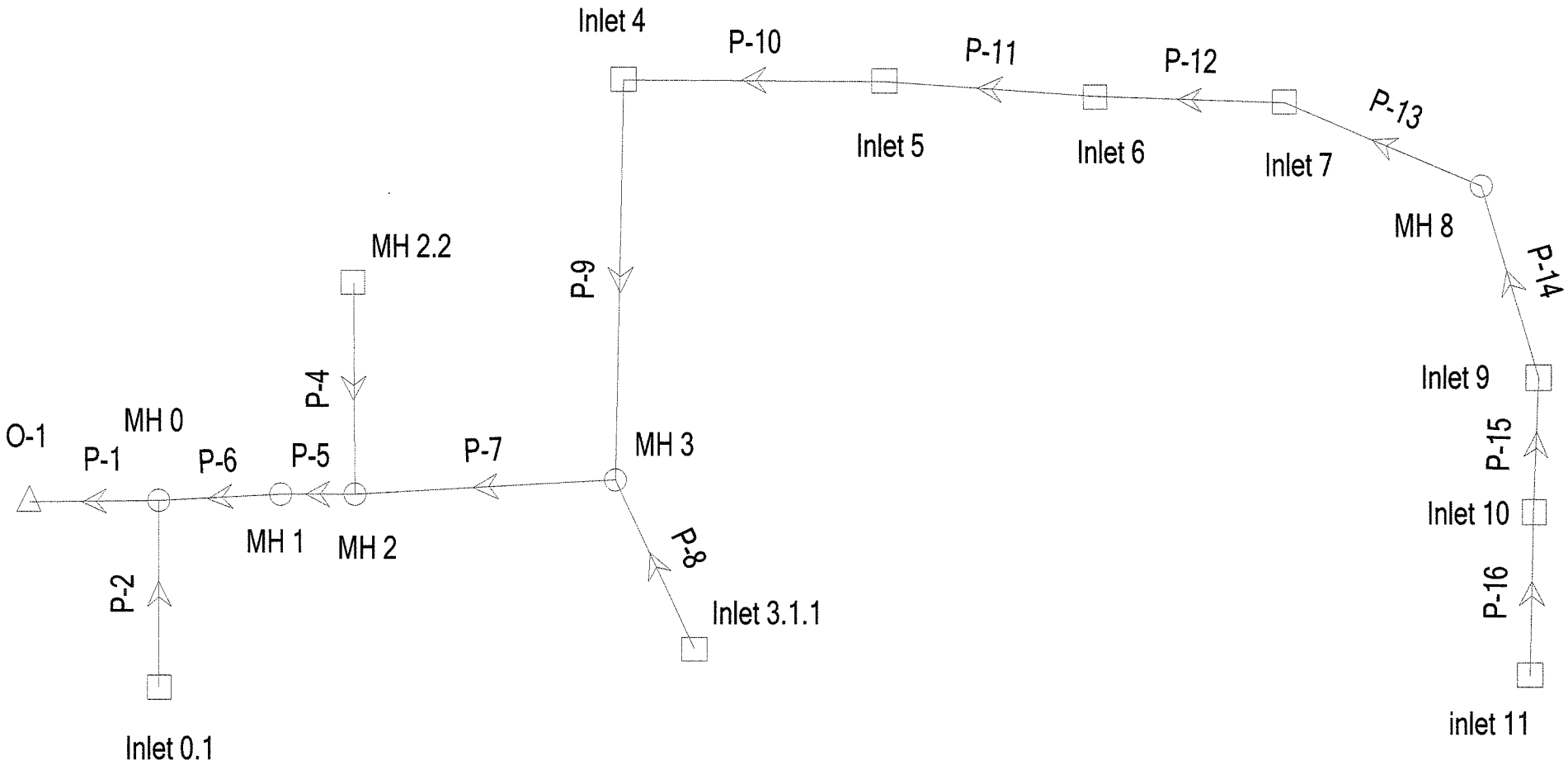

D.20

Title: Boondocks North Storm MH 1 to Intlet 11
c:\...\13-343 boondocks\public storm 100 yr.stm
12/08/14 04:10:20 PM

© Bentley Systems, Inc. Haestad Methods Solution Center Watertown, CT 06795 USA +1-203-755-1666

Project Engineer: Bill Miller
StormCAD v5.6 [05.06.012.00]

Scenario: Base

Combined Pipe\Node Report

Upstream Node	Downstream Node	Label	Length (ft)	Section Size	Upstream Invert Elevation (ft)	Downstream Invert Elevation (ft)	Design Capacity (cfs)	Total Flow (cfs)	Average Velocity (ft/s)	Constructed Slope (ft/ft)	Hydraulic Grade Line In (ft)	Hydraulic Slope (ft/ft)	Hydraulic Grade Line Out (ft)	Energy Slope (ft/ft)	Energy Grade Line In (ft)	Energy Grade Line Out (ft)
inlet 11	Inlet 10	P-16	84.00	18 inch	5,802.69	5,802.19	8.10	1.30	3.36	0.005952	5,803.12	0.002923	5,802.87	0.004232	5,803.27	5,802.91
Inlet 10	Inlet 9	P-15	134.00	18 inch	5,802.19	5,800.93	10.19	3.20	5.10	0.009403	5,802.87	0.009240	5,801.63	0.009393	5,803.13	5,801.87
Inlet 9	MH 8	P-14	125.00	18 inch	5,800.93	5,799.88	9.63	3.40	4.98	0.008400	5,801.63	0.009100	5,800.50	0.008193	5,801.90	5,800.88
MH 8	Inlet 7	P-13	133.00	18 inch	5,799.88	5,798.79	9.51	3.40	4.93	0.008195	5,800.58	0.006947	5,799.66	0.007790	5,800.85	5,799.82
Inlet 7	Inlet 6	P-12	97.50	18 inch	5,798.79	5,795.37	19.67	5.10	9.35	0.035077	5,799.66	0.033960	5,796.35	0.034855	5,800.02	5,796.62
Inlet 6	Inlet 5	P-11	150.00	18 inch	5,795.37	5,793.11	12.89	6.40	7.28	0.015067	5,796.35	0.014562	5,794.16	0.015000	5,796.78	5,794.53
Inlet 5	Inlet 4	P-10	137.00	18 inch	5,793.11	5,789.61	16.79	7.40	9.20	0.025547	5,794.16	0.025092	5,790.73	0.025499	5,794.65	5,791.15
Inlet 4	MH 3	P-9	79.00	18 inch	5,789.61	5,787.36	17.73	8.30	9.87	0.028481	5,790.73	0.033411	5,788.09	0.021412	5,791.26	5,789.57
Inlet 3.1.1	MH 3	P-8	65.00	18 inch	5,790.36	5,787.36	22.57	0.30	4.47	0.046154	5,790.56	0.033172	5,788.41	0.034227	5,790.63	5,788.41
MH 3	MH 2	P-7	155.00	24 inch	5,787.36	5,783.11	37.46	8.60	9.68	0.027419	5,788.41	0.026566	5,784.29	0.027249	5,788.82	5,784.60
MH 1	MH 0	P-6	30.00	42 inch	5,780.18	5,780.00	77.93	10.80	5.69	0.006000	5,781.18	0.005528	5,781.01	0.005987	5,781.53	5,781.35
MH 2	MH 1	P-5	22.00	24 inch	5,783.11	5,780.18	82.55	10.80	18.17	0.133182	5,784.29	0.160297	5,780.76	0.039397	5,784.78	5,783.91
MH 2.2	MH 2	P-4	50.00	12 inch	5,787.00	5,783.11	12.92	2.20	12.27	0.077800	5,787.63	0.066923	5,784.29	0.069939	5,787.91	5,784.41
Inlet 0.1	MH 0	P-2	100.00	12 inch	5,782.50	5,780.00	7.32	0.30	4.58	0.025000	5,782.73	0.017159	5,781.01	0.017932	5,782.80	5,781.01
MH 0	O-1	P-1	100.00	42 inch	5,780.00	5,779.48	72.55	11.10	5.45	0.005200	5,781.01	0.006041	5,780.41	0.005043	5,781.37	5,780.87

5 year

© Bentley Systems, Inc. Haestad Methods Solution Center Watertown, CT 06795 USA +1-203-755-1666

Scenario: Base

Combined Pipe\Node Report

Upstream Node	Downstream Node	Label	Length (ft)	Section Size	Upstream Invert Elevation (ft)	Downstream Invert Elevation (ft)	Design Capacity (cfs)	Total Flow (cfs)	Average Velocity (ft/s)	Constructed Slope (ft/ft)	Hydraulic Grade Line In (ft)	Hydraulic Slope (ft/ft)	Hydraulic Grade Line Out (ft)	Energy Slope (ft/ft)	Energy Grade Line In (ft)	Energy Grade Line Out (ft)
inlet 11	Inlet 10	P-16	84.00	18 inch	5,802.69	5,802.19	8.10	3.00	4.24	0.005952	5,803.35	0.001423	5,803.23	0.003431	5,803.60	5,803.31
Inlet 10	Inlet 9	P-15	134.00	18 inch	5,802.19	5,800.93	10.19	7.20	6.25	0.009403	5,803.23	0.009188	5,802.00	0.009392	5,803.70	5,802.44
Inlet 9	MH 8	P-14	125.00	18 inch	5,800.93	5,799.88	9.63	7.60	6.04	0.008400	5,802.00	0.008904	5,800.89	0.008335	5,802.49	5,801.45
MH 8	Inlet 7	P-13	133.00	18 inch	5,799.88	5,798.79	9.51	7.60	5.98	0.008195	5,800.95	0.006537	5,800.08	0.007676	5,801.44	5,800.42
Inlet 7	Inlet 6	P-12	97.50	18 inch	5,798.79	5,795.37	19.67	11.40	11.54	0.035077	5,800.08	0.034182	5,796.75	0.034932	5,800.85	5,797.45
Inlet 6	Inlet 5	P-11	150.00	18 inch	5,795.37	5,793.11	12.89	13.80	8.17	0.015067	5,796.75	0.014789	5,794.53	0.015037	5,797.77	5,795.52
Inlet 5	Inlet 4	P-10	137.00	18 inch	5,793.11	5,789.61	16.79	15.60	10.79	0.025547	5,794.53	0.025416	5,791.05	0.025539	5,795.79	5,792.29
Inlet 4	MH 3	P-9	79.00	18 inch	5,789.61	5,787.36	17.73	16.70	11.41	0.028481	5,791.05	0.027620	5,788.86	0.028156	5,792.48	5,790.25
Inlet 3.1.1	MH 3	P-8	65.00	18 inch	5,790.36	5,787.36	22.57	0.70	5.77	0.046154	5,790.67	0.027801	5,788.86	0.029438	5,790.78	5,788.87
MH 3	MH 2	P-7	155.00	24 inch	5,787.36	5,783.11	37.46	17.40	11.70	0.027419	5,788.86	0.026461	5,784.76	0.027250	5,789.60	5,785.37
MH 1	MH 0	P-6	30.00	42 inch	5,780.18	5,780.00	77.93	21.30	6.90	0.006000	5,781.60	0.005655	5,781.43	0.005995	5,782.13	5,781.95
MH 2	MH 1	P-5	22.00	24 inch	5,783.11	5,780.18	82.55	21.30	22.04	0.133182	5,784.76	0.167899	5,781.07	0.033123	5,785.68	5,784.95
MH 2.2	MH 2	P-4	50.00	12 inch	5,787.00	5,783.11	12.92	3.90	14.40	0.077800	5,787.84	0.061530	5,784.76	0.063424	5,788.32	5,785.15
Inlet 0.1	MH 0	P-2	100.00	12 inch	5,782.50	5,780.00	7.32	0.30	4.58	0.025000	5,782.73	0.013000	5,781.43	0.013773	5,782.80	5,781.43
MH 0	O-1	P-1	100.00	42 inch	5,780.00	5,779.48	72.55	21.60	6.58	0.005200	5,781.43	0.006363	5,780.79	0.004991	5,781.96	5,781.46

100 year

© Bentley Systems, Inc. Haestad Methods Solution Center Watertown, CT 06795 USA +1-203-755-1666

Scenario: Base

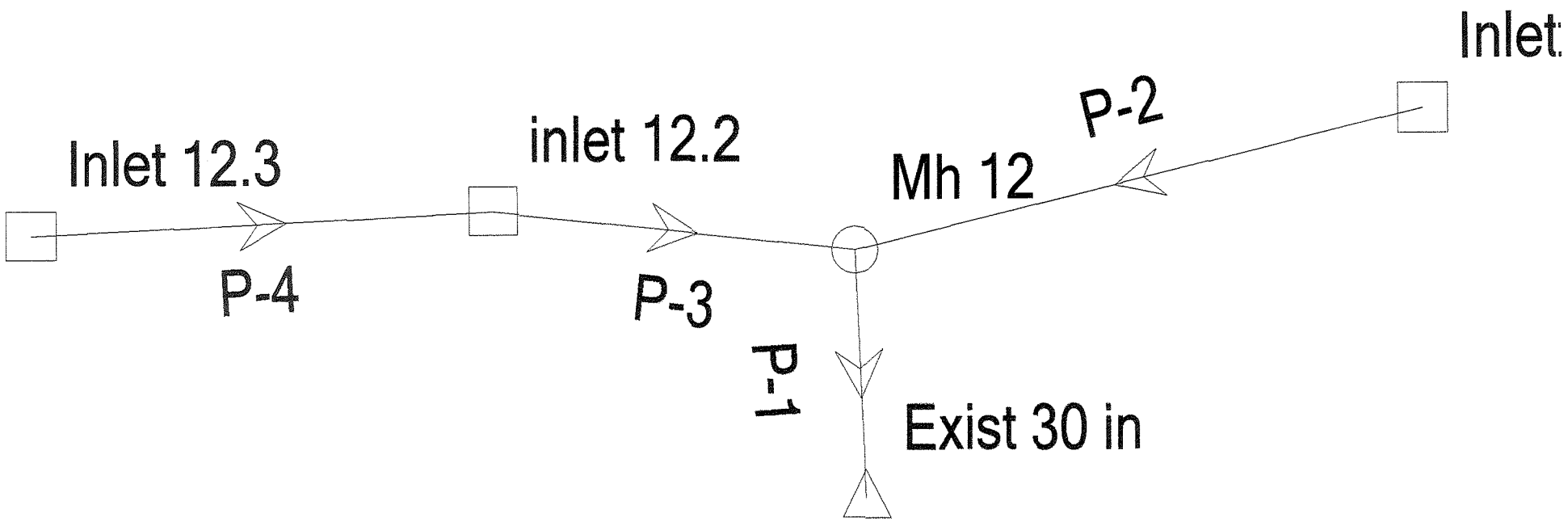

D.23

Title: Inlets 12 to 12.3 Boondocks
c:\...\13-343 boondocks\inlets 12-12.3
12/15/14 09:20:42 AM

© Bentley Systems, Inc. Haestad Methods Solution Center Watertown, CT 06795 USA +1-203-755-1666

Project Engineer: Bill Miller
StormCAD v5.6 [05.06.012.00]

Scenario: Base

Combined Pipe\Node Report

Upstream Node	Downstream Node	Label	Length (ft)	Section Size	Upstream Invert Elevation (ft)	Downstream Invert Elevation (ft)	Design Capacity (cfs)	Total Flow (cfs)	Average Velocity (ft/s)	Constructed Slope (ft/ft)	Hydraulic Grade Line In (ft)	Hydraulic Slope (ft/ft)	Hydraulic Grade Line Out (ft)	Energy Slope (ft/ft)	Energy Grade Line In (ft)	Energy Grade Line Out (ft)
Inlet 12.3	inlet 12.2	P-4	74.00	18 inch	5,795.60	5,791.60	24.42	2.10	8.45	0.054054	5,796.15	0.052390	5,792.27	0.053530	5,796.35	5,792.39
inlet 12.2	Mh 12	P-3	48.00	18 inch	5,791.60	5,790.00	19.18	3.10	7.97	0.033333	5,792.27	0.032911	5,790.69	0.033310	5,792.53	5,790.93
Inlet 12.1	Mh 12	P-2	23.00	18 inch	5,790.46	5,790.00	14.85	1.30	5.17	0.020000	5,790.89	0.008538	5,790.69	0.013383	5,791.04	5,790.73
Mh 12	Exist 30 in	P-1	25.00	30 inch	5,790.00	5,788.00	116.01	4.40	11.34	0.080000	5,790.69	0.027617	5,790.00	0.036818	5,790.94	5,790.02

5 year

© Bentley Systems, Inc. Haestad Methods Solution Center Watertown, CT 06795 USA +1-203-755-1666

Scenario: Base

Combined Pipe\Node Report

Upstream Node	Downstream Node	Label	Length (ft)	Section Size	Upstream Invert Elevation (ft)	Downstream Invert Elevation (ft)	Design Capacity (cfs)	Total Flow (cfs)	Average Velocity (ft/s)	Constructed Slope (ft/ft)	Hydraulic Grade Line In (ft)	Hydraulic Slope (ft/ft)	Hydraulic Grade Line Out (ft)	Energy Slope (ft/ft)	Energy Grade Line In (ft)	Energy Grade Line Out (ft)
Inlet 12.3	inlet 12.2	P-4	74.00	18 inch	5,795.60	5,791.60	24.42	5.40	11.10	0.054054	5,796.50	0.051818	5,792.66	0.053445	5,796.87	5,792.91
inlet 12.2	Mh 12	P-3	48.00	18 inch	5,791.60	5,790.00	19.18	7.50	10.19	0.033333	5,792.66	0.032971	5,791.08	0.033322	5,793.15	5,791.55
Inlet 12.1	Mh 12	P-2	23.00	18 inch	5,790.46	5,790.00	14.85	2.90	6.52	0.020000	5,791.11	0.001236	5,791.08	0.008847	5,791.35	5,791.15
Mh 12	Exist 30 in	P-1	25.00	30 inch	5,790.00	5,788.00	116.01	10.40	14.64	0.080000	5,791.08	0.043136	5,790.00	0.055711	5,791.49	5,790.09

0.24

© Bentley Systems, Inc. Haestad Methods Solution Center Watertown, CT 06795 USA +1-203-755-1666

APPENDIX E

References

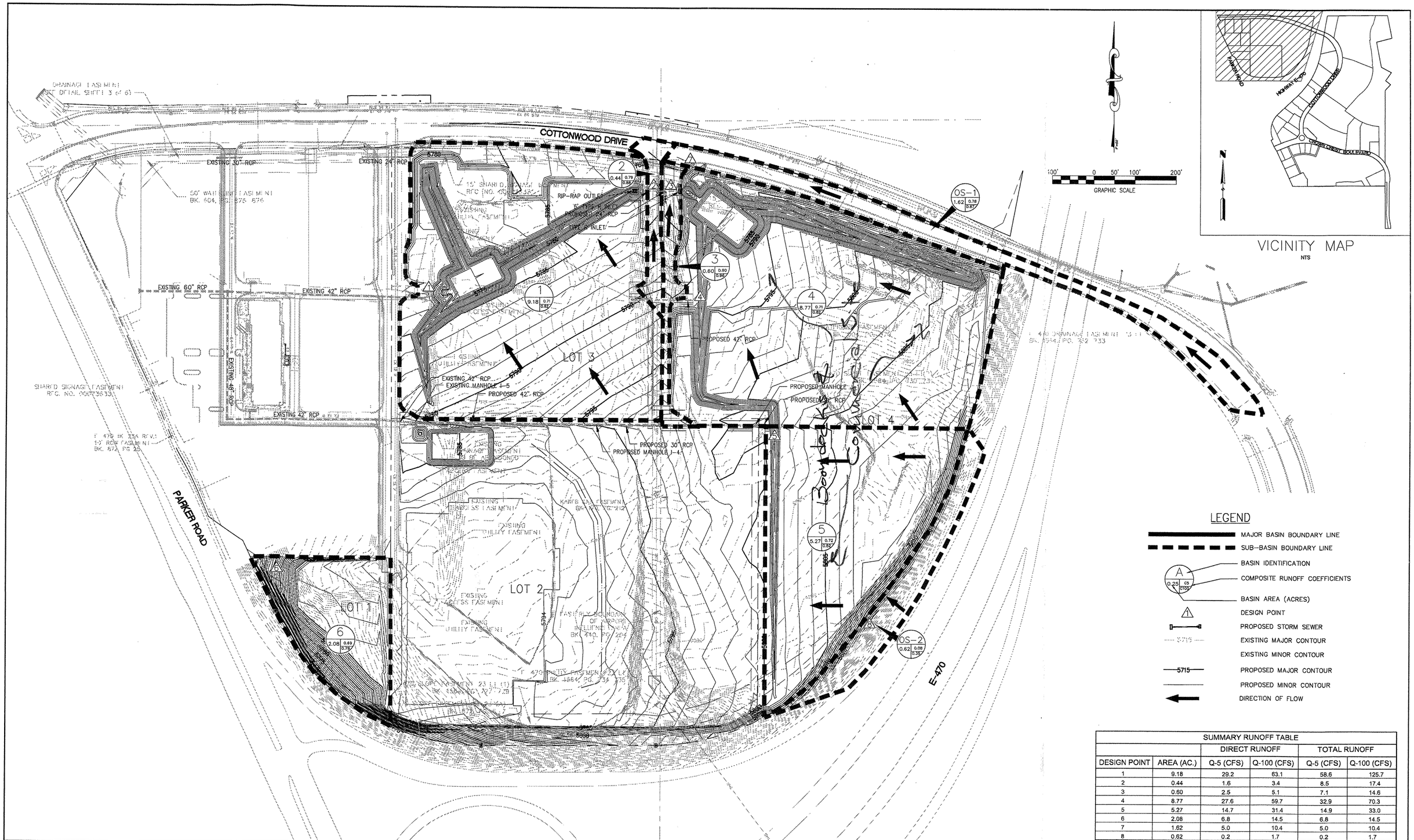

SUMMARY RUNOFF TABLE					
		DIRECT RUNOFF		TOTAL RUNOFF	
DESIGN POINT	AREA (AC.)	Q-5 (CFS)	Q-100 (CFS)	Q-5 (CFS)	Q-100 (CFS)
1	9.18	29.2	63.1	58.6	125.7
2	0.44	1.6	3.4	8.5	17.4
3	0.60	2.5	5.1	7.1	14.6
4	8.77	27.6	59.7	32.9	70.3
5	5.27	14.7	31.4	14.9	33.0
6	2.08	6.8	14.5	6.8	14.5
7	1.62	5.0	10.4	5.0	10.4
8	0.62	0.2	1.7	0.2	1.7

REV	REVISION DESCRIPTION	DATE	CHANGED BY	CHECKED BY	APPROVED BY
1	PER TOWN OF PARKER COMMENTS	7-20-07	SPH	BJP	

DEERWATER & POINT COMPANY
TIM LEONARD
MAIL: P.O. BOX 1175 KITTREDGE, CO 80457
DELIVERIES: 27905 MEADOW DR., STE. 11
EVERGREEN, CO 80439
PHONE: (303) 674-7856
FAX: (303) 674-2254

MERRICK
Engineers & Architects
2450 S. Peoria St., Aurora CO 80014, Phone 303/751 0741

THIS AND ANY OTHER ELECTRONIC MEDIA COUNTERPART IS AN INSTRUMENT OF SERVICE PREPARED BY MERRICK AND COMPANY FOR A DEFINED PROJECT. IT IS NOT INTENDED OR REPRESENTED TO BE SUITABLE FOR REUSE IN WHOLE OR IN PART ON EXTENSIONS OF THIS PROJECT OR ON ANY OTHER PROJECT. REUSE OR MODIFICATION OF ANY VERSION IF NOT A FINISHED INSTRUMENT, WITHOUT THE PRIOR EXPRESS WRITTEN CONSENT OF MERRICK AND COMPANY SHALL BE AT THE USER'S RISK FOR THE UNAUTHORIZED USE WITHOUT LIABILITY OR LOSS TO MERRICK AND COMPANY.

MERRICK	SIGNATURE	DATE
DRAWN	CAW	07/20/07
DESIGNED	CAW	07/20/07
QC REVIEW	GAC	07/20/07
APPROVED	BJP	07/20/07
CLIENT	SIGNATURE	DATE
REVIEW		
APPROVED		
CAD FILE NAME	3841-DRN	

TODAY CROWN POINT
CROWN POINT F/1, 14TH AMENDMENT
PARKER, COLORADO

CLIENT PROJECT NO.

MERRICK PROJECT NO. 0303841

SCALE: 1" =100'

TITLE:
14TH AMENDMENT
CONSTRUCTION PLANS
DRAINAGE MAP
FUTURE

REVISION:	DRAWING NO.	LATEST DATE:	SHEET NO.
		07/20/07	

F:\ACL\18038441\Drainage\14th Amendment Final Drainage\3841-DRN-Future.dwg, FINAL, 12/27/2007 11:21:55 AM, cwieloder, Adobe PDF, 1:1