QUICK N CLEAN CAR WASH

PARKER RD. & PINE LANE AVE. PARKER, CO

CONTACT INFORMATION

ARCHITECTURE
CSHQA
2696 S COLORADO BLVD. STE 525
DENVER, CO 80222
(303) 962-9164
CONTACT: BILL STOW
EMAIL: bill.stow@cshqa.com
www.cshqa.com

STRUCTURAL
JARAMILLO - TONNESON & ASSOCIATES
15825 S. 46TH STREET STE 129
(480) 422-2179
CONTACT: SERGIO JARAMILLO
EMAIL: sergio.jaramillo@jtaengineering.com

PLUMBING / MECHANICAL
3 CONSULTING ENGINEERS
1415 PARK AVE. W.
DENVER, CO 80205
(303) 357-1998 EXT. 82
CONTACT: BRUCE PACHIKARA, P.E.
EMAIL: bp@3consultingengineers.com

ELECTRICAL
3 CONSULTING ENGINEERS
1415 PARK AVE. W.
DENVER, CO 80205
(303) 357-1998 EXT. 82
CONTACT: BRUCE PACHIKARA, P.E.
EMAIL: bp@3consultingengineers.com

OWNER
LTH DEVELOPMENT GROUP, LLC
11811 NORTH TATUM BLVD. STE 1051
PHOENIX AZ 85028
(480) 963-4527
CONTACT: MICHAEL SCARBROUGH
EMAIL: mike@3k1.us

LANDSCAPE/CIVIL (SEPARATE PACKAGE)
CEI ENGINEERING ASSOCIATES, INC.
710 W. PINEDALE AVENUE
FRESNO, CA 93711
(559) 447-3119 EXT. 1459
CONTACT: JASON HATWIG
EMAIL: jhatwig@ceieng.com

BUILDING DEPARTMENT
PARKER BUILDING DIVISION
(303) 841-1970
20120 E. MAINSTREET
PARKER, CO 80138

FIRE REVIEW JURISDICTION
PARKER BUILDING DIVISION
CONTACT: RANDY CAPRA
SPRINKLERS NOT NEEDED
(303) 805-3163
20120 E. MAINSTREET
PARKER, CO 80138

DRAWING INDEX

SHEET NO.	SHEET NAME
GENERAL	
G0.0	TITLE SHEET
G1.1	OCCUPANCY & CODE PLAN
CIVIL/LANDSCAPE	
SEE CIVIL DRAWINGS FOR THEIR SHEET INDEX	
STRUCTURAL	
S0.1	GENERAL STRUCTURAL NOTES
S0.2	TYPICAL DETAILS
S0.3	TYPICAL DETAILS
S1.1	FOUNDATION PLAN
S2.1	ROOF FRAMING PLAN
S2.2	SNOW LOAD ROOF DIAGRAM
S2.3	PIER LAYOUT
S3.1	FOUNDATION DETAILS
S4.1	FRAMING DETAILS
ARCHITECTURAL	
A0.1	PIER DIAGRAM PLAN
A1.1	FLOOR PLAN
A2.1	REFLECTED CEILING PLAN
A3.1	ROOF PLAN
A4.1	ENLARGED PLANS AND SCHEDULES
A5.1	EXTERIOR ELEVATIONS
A6.1	BUILDING SECTIONS
A6.2	BUILDING SECTIONS
A7.1	DETAILS
A7.2	WINDOW/DOOR DETAILS
A7.3	DETAILS
A8.1	ROOFING DETAILS
A8.2	ROOFING DETAILS
PLUMBING	
P0.1	PLUMBING COVER SHEET
P0.2	PLUMBING SCHEDULES
P1.1	PLUMBING FLOOR PLAN
P1.2	PLUMBING ROOF PLAN
P2.1	PLUMBING DETAILS
P2.2	PLUMBING ISOMETRIC
MECHANICAL	
M0.1	MECHANICAL COVER SHEET
M0.2	MECHANICAL SPECIFICATIONS
M0.3	MECHANICAL SCHEDULES
M0.4	MECHANICAL SNOWMELT SPECIFICATIONS
M0.5	MECHANICAL SNOWMELT
M0.6	MECHANICAL SNOWMELT
M1.0	MECHANICAL SNOWMELT PLAN
M1.1	MECHANICAL FLOOR PLAN
M1.2	MECHANICAL ROOF PLAN
M2.1	MECHANICAL DETAILS
M2.2	MECHANICAL DETAILS
ELECTRICAL	
E0.1	ELECTRICAL COVER SHEET
E0.2	ELECTRICAL LEGEND & NOTES
E1.0	ELECTRICAL SITE PLAN
E1.1	ELECTRICAL LIGHTING PLAN
E1.2	ELECTRICAL ROOF PLAN
E2.1	ELECTRICAL POWER PLAN
E3.1	ELECTRICAL ONE-LINE & SCHEDULES
E3.2	ELECTRICAL FIXTURE SCHEDULES & CCK
ES1.0	PHOTOMETRIC SITE PLAN

ABBREVIATIONS

℄	CENTERLINE	HR.	HOUR
⊥	PERPENDICULAR	HT.	HEIGHT
□	SQUARE	HVAC	HEATING VENTILATING AND AIR CONDITIONING
Ø	DIAMETER	I.D.	INSIDE DIAMETER
#	NUMBER	IN.	INCH
(E)	EXISTING	INSUL.	INSULATION
(F)	FUTURE	INT.	INTERIOR
(N)	NEW	JAN.	JANITOR
(R)	REMOVATE OR RELOCATED	JT.	JOINT
@	AT	K.O.	KNOCKOUT
A.B.	AIR CONDITIONING	KIT.	KITCHEN
A.D.A.A. G.	AMERICAN'S WITH DISABILITIES ACT	L.F.	LINEAL FEET OR FOOT
A.F.F.	ABOVE FINISH FLOOR	L.P.	LOW POINT
A.H.J.	AUTHORITY HAVING JURISDICTION	LAM.	LAMINATE
A.O.A.	AIRLINES OPERATION AREA	LAV.	LAVATORY
A/C	AIR CONDITIONING	LBS.	POUNDS
ABV.	ABOVE	M.B.	MACHINE BOLT
ACOUS T.	ACOUSTICAL	M.H.	MANHOLE
ADJ.	ADJUSTABLE	M.O.	MASONRY OPENING
AGG.	AGGREGATE	MAX.	MAXIMUM
ALT.	ALTERNATIVE	MECH.	MECHANICAL
ALUM.	ALUMINUM	MET.	METAL
APPRO X.	APPROXIMATE	MFR.	MANUFACTURER
ARCH.	ARCHITECTURAL	MIN.	MINIMUM
AUTO.	AUTOMATIC	MISC.	MISCELLANEOUS
AVE.	AVENUE	MTD	MOUNTED
B.O.	BOTTOM OF	N	NORTH
B.O.C.	BASE OF CURB	N.I.C.	NOT IN CONTRACT
B.U.	BUILT-UP	N.S.	NEAR SIDE
BD.	BOARD	N.T.S.	NOT TO SCALE
BLDG.	BUILDING	NO.	NUMBER
BLK.	BLOCK	NOM.	NOMINAL
BM.	BEAM	O.A.	OVER ALL
BOT.	BOTTOM	O.C.	ON CENTER
C.B.	CATCH BASIN	O.D.	OUTSIDE DIAMETER
C.C.	CENTER TO CENTER	O.H.	OPPOSITE HAND
C.I.	CAST IRON	O.T.S.	OPEN TO STRUCTURE
C.I.P.	CAST IN PLACE	O/	OVER
C.M.U.	CONCRETE MASONRY UNIT	O/H	OVERHEAD
C.O.	CONCRETE OPENING OR CLEAN-OUT	OFF.	OFFICE
C.T.	CERAMIC TILE	OPNG.	OPENING
C.W.	COLD WATER	OPP.	OPPOSITE
CAB.	CABINET	OZ.	OUNCE
CEM.	CEMENT	P.LAM.	PLASTIC LAMINATE
CFM	CUBIC FEET/MINUTE	P.T.D.	PAPER TOWEL DISPENSER
CLG.	CEILING	P/L	PROPERTY LINE
CLR.	CLEAR	PART.	PARTICLE
CNTRS K.	COUNTERSUNK	PL.	PLATE
COL.	COLUMN	PLUMB.	PLUMBING
CONC.	CONCRETE	PLYWD.	PLYWOOD
CONT.	CONTINUOUS	PRE-EN G.	PRE-ENGINEERED
CORR.	CORRIDOR	PT.	POINT
CWI	COORDINATE WITH	PVMT.	PAVEMENT
D.	DEEP	QT.	QUARRY TILE
D.B.A.	DEFORMED BAR ANCHOR	R	RADIUS OR RISER
D.F.	DRINKING FOUNTAIN	R.D.	ROOF DRAIN
D.S.	DOWNSPOUT	R.O.	ROUGH OPENING
D.S.P.	DRY STANDPIPE	R.W.L.	RAIN WATER LEADER
DET.	DETAIL	RE:	REFERENCE (CW)
DIA	DIAMETER	REINF.	REINFORCE(D)
DIAG.	DIAGONAL	REQD.	REQUIRED
DIM.	DIMENSION	RM.	ROOM
DN.	DOWN	S.C.	SOLID CORE
DWG.	DRAWING	S.C.D.	SEAT COVER DISPENSER
E.B.	EXPANSION BOLT	S.D.	SOAP DISPENSER
E.I.F.S.	EXTERIOR INSULATION & FINISHING SYSTEM	S.F.	SQUARE FEET OR FOOT
		S.I.D.A.	SECURITY IDENTIFICATION DISPLAY AREA
E.J.	EXPANSION JOINT	S.N.D.	SANITARY NAPKIN DISPENSER
E.P.	ELECTRICAL PANELBOARD	S.N.R.	SANITARY NAPKIN RECEPTACLE
E.W.C.	ELECTRIC WATER COOLER	S.S.	STAINLESS STEEL
EA.	EACH	SCHED.	SCHEDULE
EL.	ELEVATION	SECT.	SECTION
ELEC.	ELECTRICAL	SHR.	SHOWER
ELEV.	ELEVATOR	SHT.	SHEET
EQ.	EQUAL	SIM.	SIMILAR OR SIMILAR TO
EQUIP.	EQUIPMENT	SPECS.	SPECIFICATIONS
EXH.	EXHAUST	SQ.	SQUARE
EXP.	EXPANSION	ST.	STREET OR STEEL
EXT.	EXTERIOR	STD.	STANDARD
F.A.	FIRE ALARM	STRUC.	STRUCTURAL
F.B.	FLAT BAR	SUSP.	SUSPENDED
F.D.	FLOOR DRAIN	SYM.	SYMMETRICAL
F.E.	FIRE EXTINGUISHER	T & G	TONGUE & GROOVE
F.E.C.	FIRE EXTINGUISHER CABINET	T.	TREAD
F.H.C.	FIRE HOSE CABINET	T.B.	TOWEL BAR
F.O.	FACE OF	T.D.	TOP OF DRAIN
F.O.C.	FACE OF CURB/CONCRETE	T.O.	TOP OF
F.O.F.	FACE OF FINISH	T.O.C.	TOP OF CURB/CONCRETE
F.O.M.	FACE OF MASONRY	T.O.M.	TOP OF MASONRY
F.O.S.	FACE OF STUDS	T.O.P.	TOP OF PARAPET
F.O.T.	FACE OF TREAD	T.O.S.	TOP OF SLAB
F.S.	FAR SIDE	T.O.W.	TOP OF WALL
FDN.	FOUNDATION	T.P.D.	TOILET PAPER DISPENSER
FIN.	FINISH	TEL.	TELEPHONE
FL.	FLOOR(ING)	THK.	THICKNESS
FLASH.	FLASHING	THRES.	THRESHOLD
FT.	FOOT OR FEET	TYP.	TYPICAL
FTG.	FOOTING	U.B.C.	UNIFORM BUILDING CODE
FTW.	FIRE TREATED WOOD	U.O.N.	UNLESS OTHERWISE NOTED
FURR.	FURRING	V.C.T.	VINYL COMPOSITION TILE
G.	GAS	V.I.F.	VERIFY IN FIELD
G.B.	GRAB BAR	VENT.	VENTILATION
GA.	GAUGE OR GAGE	VERT.	VERTICAL
GALV.	GALVANIZED	VEST.	VESTIBULE
GYP.	GYPSUM	W.	WIDE
H.	HIGH	W.B	WALL BEYOND
H.A.S.	HEADED ANCHOR STUD	W.C.	WATER CLOSET OR WALL COVERING
H.A.S.	HEADED CONCRETE ANCHOR	W.G.	WIRE GLASS
H.B.	HOSE BIBB	W.GL.	WIRE GLASS
H.C.	HANDICAPPED - A.D.A.A.G.	W.P.	WORK POINT
H.M.	HOLLOW METAL	W.R.	WASTE RECEPTACLE
H.P.	HIGH POINT	W.W.F.	WELDED WIRE FABRIC
H.W.	HOT WATER	W/	WITH
HORIZ.	HORIZONTAL	W/O	WITHOUT
		WD.	WOOD

GENERAL NOTES

1. THE DRAWINGS INDICATE LOCATION, DIMENSIONS, REFERENCE, AND TYPICAL DETAILS OF CONSTRUCTION. THE DRAWINGS DO NOT INDICATE EVERY CONDITION - WORK NOT PARTICULARLY DETAILED SHALL BE OF CONSTRUCTION SIMILAR TO PARTS THAT ARE DETAILED.
2. DO NOT SCALE DRAWINGS.
3. FIGURED DIMENSIONS TAKE PRECEDENCE OVER SCALED DRAWINGS. WHERE DISCREPANCIES OCCUR, THEY SHALL BE REPORTED TO ARCHITECT FOR RESOLUTION.
4. DETAILED DRAWINGS AND LARGER SCALE DRAWINGS TAKE PRECEDENCE OVER SMALLER SCALE DRAWINGS.
5. CONCRETE DIMENSIONS ARE GIVEN TO FACE OF CONCRETE AND TO THE FACE OF ROUGH OPENINGS.
6. MASONRY DIMENSIONS ARE GIVEN TO FACE OF MASONRY AND TO THE FACE OF ROUGH OPENINGS.
7. PARTITION DIMENSIONS ARE GIVEN TO THE FACE OF STUD UNLESS OTHERWISE NOTED.
8. DOOR OPENING LOCATIONS ARE DIMENSIONED TO ROUGH OPENING OR CENTERLINE OF OPENING.
9. WHERE NO MATERIAL NOTES OCCUR, THE GRAPHIC MATERIAL INDICATION SHALL INDICATE MATERIAL TYPES AND ITEMS. SEE MATERIALS & SYMBOL LIST ON THIS SHEET.
10. FINISH FLOOR ELEVATION DATUM 100'-0" = 5811.00'
11. ALL NEW CONSTRUCTION TO COMPLY WITH THE AMERICANS WITH DISABILITIES ACT AND ANSI.
12. ALL MATERIALS SHALL BE INSTALLED IN ACCORDANCE WITH THE MANUFACTURER'S RECOMMENDATIONS AND SPECIFICATIONS.
13. THE CONTRACTOR(S) SHALL KEEP ALL AREAS OF CONSTRUCTION CLEAN AND FREE OF DEBRIS. AFTER CONSTRUCTION IS COMPLETE, THE GENERAL CONTRACTOR SHALL PROVIDE FINAL CLEAN UP.
14. ALL EXITS SHALL BE OPENABLE FROM THE INSIDE WITHOUT THE USE OF A KEY OR ANY SPECIAL KNOWLEDGE OR EFFORT. I.B.C. 2015, SECTION 1008.1.9.
15. EXIT SIGNAGE SHALL BE EXTERNALLY OR INTERNALLY ILLUMINATED BY THE PREMISES' WIRING AND BY STORAGE BATTERIES AND BE IN COMPLIANCE WITH IBC 2015 SECTION 1011.
16. EXIT WAYS SHALL BE ILLUMINATED PER IBC SECTION 1006. THE POWER SUPPLY FOR EXIT ILLUMINATION SHALL NORMALLY BE PROVIDED BY THE PREMISES' WIRING SYSTEM, IBC SECTION 1006.
17. UNLESS OTHERWISE INDICATED ALL DRAWING, NOTES WHICH DO NOT READ "N.I.C.", "EXISTING", OR "EXISTING TO REMAIN", OR "BY OTHERS" SHALL INDICATE NEW WORK WHICH SHALL BE CONTRACTOR FURNISHED AND CONTRACTOR INSTALLED.
18. THE CONTRACTOR SHALL VERIFY ALL EXISTING CONDITIONS AND DIMENSIONS FOR ACCURACY PRIOR TO COMMENCING WITH THE WORK. ANY DISCREPANCY SHALL BE BROUGHT TO THE ATTENTION OF THE ARCHITECT.
19. PENETRATIONS THROUGH RATED ASSEMBLIES SHALL BE FIRESTOPPED AND PROTECTED IN ACCORANCE WITH I.B.C. SECTION 714.

MATERIALS & SYMBOLS

EARTH
POROUS FILL - GRAVEL
SAND FILL
CONCRETE
CONCRETE MASONRY UNIT (NORMAL WEIGHT)
SINGLE GLAZING
INSULATED GLAZING
METAL, (LARGE SCALE DRAWING)
METAL, (SMALL SCALE DRAWING)
FRAMING LUMBER
PLYWOOD
PARTICLE BOARD
FINISH LUMBER
GYPSUM BOARD
ACOUSTIC TILE/PANEL
BATT INSULATION
SEMI-RIGID INSULATION
RIGID INSULATION
MOISTURE BARRIER
ASPHALT PAVING

NUMBER OF OCCUPANTS — X — ACCESSORY USE
OCCUPANCY FACTOR — 150 SF / 100 SF — AREA OF ROOM
A-1 — MATERIAL FINISH, RE: A41 & A51 FINISH SCHEDULE
— SHEET NOTE, RE: SHEET NOTES LIST ON CURRENT PAGE
W01 T.O.W. XXX'-XX" — WALL TYPE, RE: A11. FOR WALL TYPES WITH VARIABLE HEIGHT, SEE TOP OF WALL ELEVATION
1i — ACCESSORY/FIXTURE TYPE, RE: A41
1/1 — REVISION KEY RE: REVISED BOX IN TITLE BLOCK OF CURRENT PAGE
PROPERTY LINE
AREA DRAIN / CATCH BASIN
—Z— FLUSH SURFACE MEETING
STRUCTURE CENTERLINE
118'-0" — ELEVATION POINT
1 / A61 — BUILDING SECTION MARK REF. (SEE DWG. #1 @ SHT. A61)
1 / A63 — WALL SECTION MARK REF. (SEE DWG. #1 @ SHT. A63)
AXX- X — DETAIL REFERENCE (SEE DWG. #1 @ SHT. A71)
AXX-X — DETAIL SECTION MARK
A21 — INTERIOR ELEVATIONS SEE DWG. #1 @ SHT. A21
A — WINDOW TYPE, RE: A41 WINDOW TYPES
101 — DOOR NUMBER, RE: A41 DOOR SCHEDULE
Room name 101 — ROOM NAME / ROOM NUMBER

PROJECT INFORMATION

PROJECT DESCRIPTION:
CONSTRUCTION OF A 5,343 SQ. FT. CAR WASH AND ASSOCIATED SITE WORK ON AN EXISTING LOT.

FOR CODE DATA, OCCUPANT LOAD CALCULATION AND OTHER CODE COMPLIANCE CALCULATIONS, SEE G1.1, CODE PLAN & DETAILS

SPECIAL INSPECTIONS

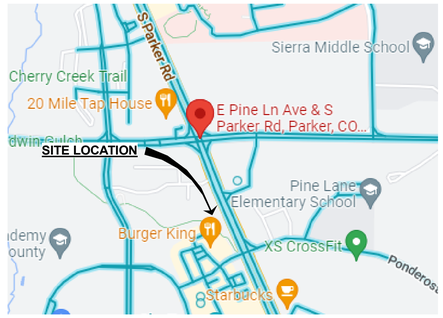
- CONCRETE
- STRUCTURAL STEEL
- MASONRY
- ADDITIONAL INSPECTIONS AS REQUIRED BY THE AHJ
- SEE SHEET S01.1

DEFERRED SUBMITTALS

1. FIRE ALARM SHOP DRAWINGS
2. STEEL JOIST/JOIST GIRDERS

VICINITY MAP

NORTH
NOT TO SCALE



SCOPE OF WORK

CONSTRUCTION OF A 5,343 SQ. FT. NEW CAR WASH AND ASSOCIATED SITE WORK ON AN EXISTING LOT.

STATE OF COLORADO
JESSE GOLDMAN
400744
01-19-2023
LICENSED ARCHITECT

JESSE GOLDMAN, ARCHITECT
2696 S COLORADO BLVD. SUITE 525
DENVER, CO 80222
(303) 962-9164

THESE DRAWINGS AND SPECIFICATIONS AS INSTRUMENTS OF SERVICE ARE AND SHALL REMAIN THE PROPERTY OF THE ARCHITECT. ENGINEER WHETHER THE PROJECT FOR WHICH THEY ARE MADE IS EXECUTED OR NOT. THESE DRAWINGS AND SPECIFICATIONS ARE NOT TO BE USED BY ANY PERSON OR ENTITY ON OTHER PROJECTS, FOR ADDITIONS TO THIS PROJECT, OR FOR COMPLETION OF THIS PROJECT WHEN PHASED WITHOUT THE EXPRESS WRITTEN PERMISSION OF THE ARCHITECT. ALL COMMON LAW STATUTORY AND OTHER RESERVED RIGHTS INCLUDING COPYRIGHT ARE EXPRESSLY RESERVED.
Copyright © 2023

QUICK N CLEAN CAR WASH
PARKER RD. & PINE LANE AVE.
PARKER, CO

CSHQA
2696 S COLORADO BLVD, SUITE 525
DENVER, CO 80222
(303) 962-9164
www.cshqa.com

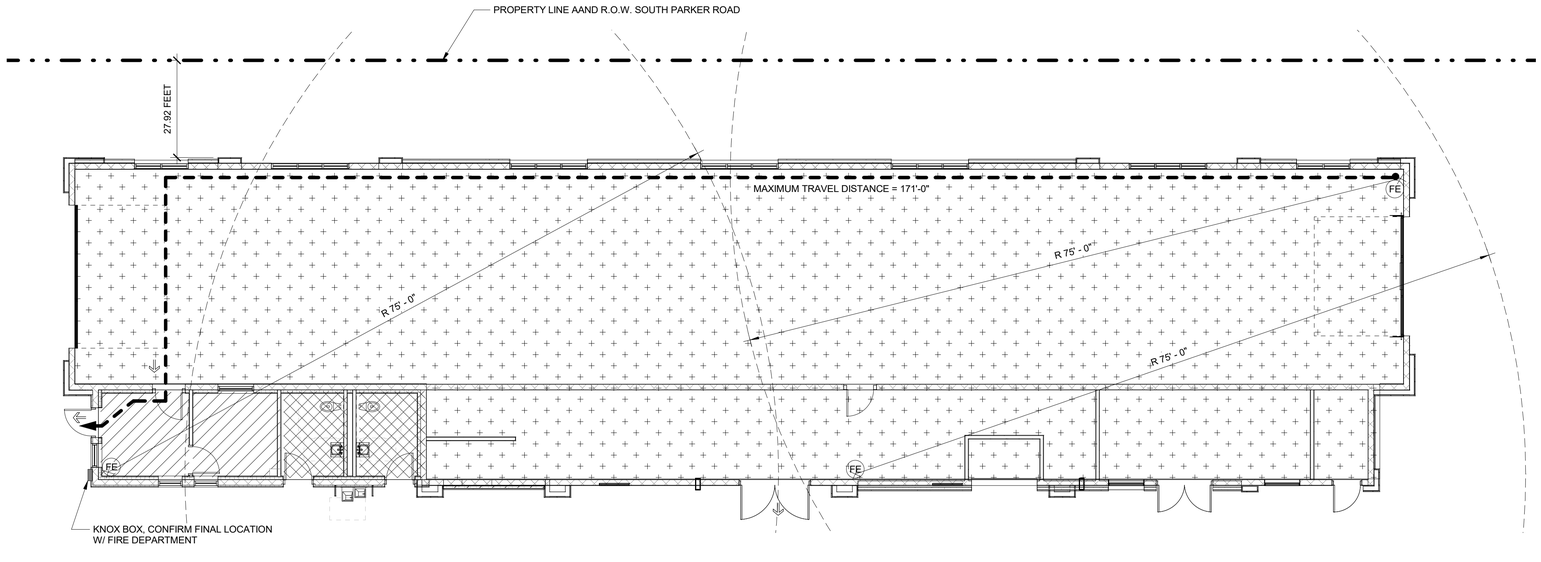
PROJECT	DATE
20037.000	1-19-2023
DRAWN	CHECKED
RJ	WRS

REVISED

SHEET TITLE
TITLE SHEET

SHEET
G0.0
ORIGINAL SHEET SIZE
24" x 36"

1/19/2023 4:18:23 PM



1 EGRESS FLOOR PLAN
1/8" = 1'-0"

LEGEND:

FE	PORTABLE FIRE EXTINGUISHER TYPE 2A-10BC, RE: MOUNTING HEIGHTS A4.1-8	
	EXIT	
	PATH OF EGRESS TRAVEL TYP.	
	ACCESSORY STORAGE & MECH./EQUIP.	4,699 SF
	BUSINESS	186 SF
	NON-OCCUPIABLE AREAS: RESTROOMS AND FIRE RISER ROOM	139 SF
	TOTAL	5,024 SF

OCCUPANT LOAD

BUILDING AREA: 5,343 SF
OCCUPANT LOAD AREA: 5,024 SF

OCCUPANT LOAD CALCULATIONS (PER IBC TABLE 1004.1.2):

ACCESSORY STORAGE AREAS, MECH., & EQUIP (4,699/300):	17
BUSINESS @ 100 S.F. PER PERSON (186/100):	2
RESTROOMS	EXEMPT
TOTAL OCCUPANTS:	19

FIXTURE ANALYSIS:

TOTAL OCCUPANT LOAD: = 19 OCCUPANTS

FIXTURES REQUIRED: PER IBC TABLE 2902.1, CLASSIFICATION ASSEMBLY 'B'

WATER CLOSETS = 1 UNIT /25 OCC. = 1 REQUIRED
(1 PER FIRST 25 FOR FIRST 50 AND 1 PER 50 FOR THE REMAINDER EXCEEDING 50)

LAVATORIES = 1 UNIT /40 OCC. = 1 REQUIRED
(1 PER FIRST 40 FOR FIRST 80 AND 1 PER 80 FOR THE REMAINDER EXCEEDING 80)

DRINKING FOUNTAIN = 1 REQUIRED

SERVICE SINKS = 1 REQUIRED

FIXTURES PROVIDED:

UNISEX WATER CLOSETS = 2 PROVIDED
UNISEX LAVATORIES = 2 PROVIDED

DRINKING FOUNTAIN = 2 PROVIDED

SERVICE SINK = 1 PROVIDED

ACCESSIBILITY:

THE FOLLOWING FIXTURE COUNT (AS PART OF THE TOTAL PROVIDED)
ARE ACCESSIBLE PER IBC SECTION 1109.2
ACCESSIBLE LAVATORY = 2 PROVIDED
ACCESSIBLE WATER CLOSET = 2 PROVIDED

CODE DATA

CONSTRUCTION TYPE: VB, NOT SPRINKLERED

OCCUPANCY GROUP: B

2021 INTERNATIONAL BUILDING CODE (IBC)
ICC A117.1-2009
2021 INTERNATIONAL ENERGY CONSERVATION CODE (IECC)
2021 INTERNATIONAL PLUMBING CODE (IPC)
2021 INTERNATIONAL MECHANICAL CODE (IMC)
2021 INTERNATIONAL FUEL GAS CODE (IFGC)
2021 INTERNATIONAL FIRE CODE (IFC)
2020 NATIONAL ELECTRICAL CODE (NEC)

ENERGY COMPLIANCE

2021 IECC
CLIMATE ZONE 5A
COLORADO COUNTY: DOUGLAS
CAR WASH TUNNEL & EQUIPMENT ROOM NOT A OCCUPIED SPACE PER PRESCRIPTIVE PATH

MASS WALL
- R VALUE REQUIRED: 11.4 ci
- R VALUE PROVIDED: 11.4 ci

ROOF INSULATION ENTIRELY ABOVE ROOF DECK
- R VALUE REQUIRED: R-30 ci
- R VALUE PROVIDED: R-38 ci

SLAB ON GRADE (UNHEATED)
- R VALUE REQUIRED: R-7.5 FOR 24" BELOW
- R VALUE PROVIDED: R-7.5 FOR 24" BELOW

SWINGING OPAQUE DOORS
- U FACTOR REQUIRED: U-0.37
- U FACTOR PROVIDED: U-0.36

WINDOWS (FIXED):
- U FACTOR REQUIRED: U-0.36
- U FACTOR PROVIDED: U-0.29
- SHGC REQUIRED (PF < 0.2): 0.38
- SHGC PROVIDED: 0.23

EXIT ANALYSIS:

EXIT AND EXIT ACCESS DOORWAYS

PER IBC, SECTION 1006 AND TABLE 1006.2.1, FOR SPACES WITH THE OCCUPANCY CLASSIFICATION 'B' HAVING AN OCCUPANT LOAD LESS THAN 50 REQUIRES ONE EXIT.

TOTAL EXITS PROVIDED FOR THIS SPACE = 1

THEREFORE THE NUMBER OF EXITS IS ADEQUATE

MAXIMUM TRAVEL DISTANCE

PER IBC TABLE 1017.2 BUSINESS OCCUPANCY WITHOUT SPRINKLERS: 200' MAXIMUM TRAVEL DISTANCE

MAXIMUM TRAVEL DISTANCE: 186'-0"

THEREFORE EGRESS DISTANCE IS ACCEPTABLE

STATE OF COLORADO
JESSE GOLDMAN
400744
01-19-2023
LICENSED ARCHITECT

JESSE GOLDMAN, ARCHITECT
2696 S COLORADO BLVD, SUITE 525
DENVER, CO 80222
(303) 962-9164

THESE DRAWINGS AND SPECIFICATIONS AS INSTRUMENTS OF SERVICE ARE AND SHALL REMAIN THE PROPERTY OF THE ARCHITECT. ENGINEER WHETHER THE PROJECT FOR WHICH THEY ARE MADE IS EXECUTED OR NOT. THESE DRAWINGS AND SPECIFICATIONS SHALL NOT BE USED BY ANY PERSON OR ENTITY ON OTHER PROJECTS, FOR ADDITIONS TO THIS PROJECT, OR FOR COMPLETION OF THIS PROJECT WHEN PHASED WITHOUT THE WRITTEN PERMISSION OF THE ARCHITECT OR ENGINEER.
Copyright © 2023

QUICK N CLEAN CAR WASH
PARKER, CO
PARKER RD. & PINE LANE AVE.
2696 S COLORADO BLVD, SUITE 525
DENVER, CO 80222
(303) 962-9164
www.cshqa.com
CSHQA

PROJECT 20037.000	DATE 1-19-2023
DRAWN RJ	CHECKED WRS

REVISED

SHEET TITLE
OCCUPANCY & CODE PLAN

SHEET
G1.1
ORIGINAL SHEET SIZE
24" x 36"

1/19/2023 1:54:44 PM

INTERPRETATION OF DRAWINGS

PLAN LEGEND

SYMBOL	DESCRIPTION	REMARKS
DETAIL # / SHEET #	DETAIL CUTS SHOWN ON PLANS	TYPICAL DETAILS ARE TWO DIGIT SERIES NUMBERS. FOUNDATION DETAILS ARE 100 SERIES DETAILS. FRAMING DETAILS ARE 200 SERIES NUMBERS.
	8" MASONRY WALL U.N.O.	OTHER SIZES ARE DIMENSIONED ON PLANS
	MECHANICAL EQUIPMENT	SEE PLANS FOR UNIT WEIGHTS
	OPENING IN FRAMING	SEE NOTE #4

NOTES

1. FOR MATERIAL STRENGTHS, SEE GENERAL STRUCTURAL NOTES
2. VERIFY ALL DIMENSION WITH ARCHITECTURAL DRAWINGS PRIOR TO START OF CONSTRUCTION – RESOLVE ANY DISCREPANCIES WITH ARCHITECT.
3. FOR CLARITY, ALL EXTERIOR SLABS AND SIDEWALKS MAY NOT BE SHOWN. FOR EXACT DIMENSIONS, LOCATIONS, JOINT AND SCORE LINES, SEE ARCHITECTURAL DRAWINGS
4. FOR CLARITY, ALL OPENINGS MAY NOT BE SHOWN ON FRAMING PLANS. FOR EXACT SIZE, NUMBER, AND LOCATION OF OPENINGS, SEE ARCHITECTURAL, MECHANICAL, ELECTRICAL AND PLUMBING DRAWINGS. FOR FRAMING AT OPENINGS, SEE TYPICAL STRUCTURAL DETAILS. VERIFY ALL SIZES, WEIGHTS AND LOCATIONS OF MECHANICAL EQUIPMENT WITH MECHANICAL ENGINEER AND MECHANICAL CONTRACTOR THROUGH ARCHITECT.
5. DETAILS MARKED "TYPICAL" MAY NOT BE CUT ON PLANS.
6. CONC C.J. – AS SHOWN ON PLAN INDICATES LOCATION OF EITHER KEYED OR SAW CUT CONTROL JOINT IN SLAB ON GRADE AT CONTRACTOR'S OPTION, SEE GENERAL STRUCTURAL NOTES AND PLANS.
7. MAS C.J. – AS SHOWN ON PLAN INDICATES MASONRY CONTROL JOINT IN MASONRY WALL, SEE G.S.N. AND TYPICAL DETAIL.
8. FOR CLARITY, DETAILS MAY SHOW ONLY ONE SIDE OF FRAMING CONDITION.
9. CONTRACTOR TO VERIFY, AND BE RESPONSIBLE FOR VARIATIONS IN CONCRETE QUANTITY DUE TO CAMBER, CONSTRUCTION DEAD LOAD DEFLECTIONS AND/OR TOLERANCES OF STRUCTURAL STEEL ELEMENTS (i.e. BEAMS, STEEL DECK, ETC.) AND PRECAST CONCRETE ELEMENTS.
10. ALL SCHEDULE MARK DESIGNATIONS MAY NOT NECESSARILY BE FOUND ON THE PLANS WHERE THE SCHEDULES OCCUR. SCHEDULES ARE TYPICAL TO THE PROJECT.

ABBREVIATIONS

AB	ANCHOR BOLT	LL	LIVE LOAD
ABC	AGGREGATE BASE COURSE	LLV	LONG LEG VERTICAL
AFF	ABOVE FINISHED FLOOR.	LLH	LONG LEG HORIZONTAL
AISC	AMERICAN INSTITUTE OF STEEL CONSTRUCTION	LT	LIGHT
ALT	ALTERNATE	LWC	LIGHT WEIGHT CONCRETE
ALUM	ALUMINUM	MAS	MASONRY
ANSI	AMERICAN NATIONAL STANDARDS INSTITUTE, INC.	MAS CJ	MASONRY CONTROL JOINT
APPROX	APPROXIMATE	MAX	MAXIMUM
ARCH'L	ARCHITECTURAL	MECH'L	MECHANICAL
ASTM	AMERICAN SOCIETY FOR TESTING & MATERIALS	MEZZ	MEZZANINE
AWS	AMERICAN WELDING SOCIETY	MFR	MANUFACTURER
BHW	BEHLEN HEADED WELDED THREADED STUDS	MMFX	MINIMUM BUILDING MANUFACTURER ASSOCIATION
BTWN	BETWEEN	MIN	MINIMUM
BOB	BOTTOM OF BEAM	N/A	NOT APPLICABLE
BOD	BOTTOM OF DECK	NTS	NOT TO SCALE
BOF	BOTTOM OF FOOTING	NWC	NORMAL WEIGHT CONCRETE
BRG	BEARING	O.C.	ON CENTER
BLDG	BUILDING	O.F.	OUTSIDE FACE
CIP	CAST IN PLACE	OPP	OPPOSITE
CL	CENTERLINE	OSHA	OCCUPATIONAL SAFETY & HEALTH ADMIN.
CLR	CENTERLINE OF BEAM	OD	OUTSIDE DIAMETER
CLF	CENTERLINE OF FOOTING	PCI	PRESTRESSED CONCRETE INSTITUTE
CLR	CLEAR	PLF	POUNDS PER LINEAL FOOT
COORD	COORDINATE	+/-	PLUS OR MINUS
CJP	COMPLETE JOINT PENETRATION	PREFAB	PREFABRICATED
CONC	CONCRETE	PSI	POUNDS PER SQUARE INCH
CONC CJ	CONCRETE CONTROL JOINT	PT	POST TENSIONED
CMU	CONCRETE MASONRY UNIT	PRELIM	PRELIMINARY
CONT	CONTINUOUS	QTY	QUANTITY
DL	DEAD LOAD	RAD	RADIUS
DIA or Ø	DIAMETER	REF	REFERENCE
DF	DOUG FIR	REINF	REINFORCEMENT
DFL	DOUGLAS FIR LARCH	REQ'D	REQUIRED
DN	DOWN	RTU	ROOF TOP UNIT
DWG	DRAWING	SIM	SIMILAR
DET	DETAIL	SQ	SQUARE
EW	EACH WAY	STD	STANDARD
ELEV	ELEVATION	STL	STEEL
ENGR	ENGINEER	SJI	STEEL JOIST INSTITUTE
EXP	EXPANSION	STAGG	STAGGERED
EQ	EQUAL	SPECS	SPECIFICATIONS
EQUIP	EQUIPMENT	SW	SHEARWALL
FAB	FABRICATE	THRU	THROUGH
FDN	FOUNDATION	TOB	TOP OF BEAM
FLR	FLOOR	TOF	TOP OF FOOTING
FTG	FOOTING	TOD	TOP OF DECK
FF	FINISHED FLOOR	TOL	TOP OF LEDGER
FOW	FACE OF WALL	TOS	TOP OF STEEL
GA	GAUGE	TOW	TOP OF WALL
GALV	GALVANIZED	TRANS	TRANSVERSE
GB	GRADE BEAM	TYP	TYPICAL
GSN	GENERAL STRUCTURAL NOTES	T&G	TONGUE & GROOVE
GLB	GLUE LAMINATED BEAM	UNO	UNLESS NOTED OTHERWISE
HORIZ	HORIZONTAL	VERT	VERTICAL
HSS	HOLLOW STRUCTURAL SECTION	VIF	VERIFY IN FIELD
HT	HEIGHT	WP	WORK POINT
HVAC	HEATING VENTILATION AIR CONDITIONING	WWF	WELDED WIRE FABRIC
IBC	INTERNATIONAL BUILDING CODE	WWM	WELDED WIRE MESH
IN	INCH	WWR	WELDED WIRE REINFORCEMENT
JST	JOIST	W/	WITH
K	KIPS	W/C	WATER TO CEMENT RATIO
KSI	KIPS PER SQUARE INCH	W/O	WITHOUT
LOD	LOCATION OF DETAILS	WF	WIDE FLANGE
LB	POUND OR POUNDS	YD	YARD
LOC	LOCATION OR LOCATE		

SHEET INDEX

SHEET NUMBER	DESCRIPTION
S0.1	GENERAL STRUCTURAL NOTES
S0.2	TYPICAL DETAILS
S0.3	TYPICAL DETAILS
S1.1	FOUNDATION PLAN
S2.1	ROOF FRAMING PLAN
S2.2	SNOW LOAD ROOF DIAGRAM PLAN
S2.3	SITE PLAN
S3.1	FOUNDATION DETAILS
S4.1	ROOF FRAMING DETAILS

GENERAL STRUCTURAL NOTES

APPLY UNLESS NOTED OTHERWISE

INSTRUCTIONS TO BIDDERS CONTINGENCIES

1. UNDER NO CIRCUMSTANCES SHALL THESE DRAWINGS BE FINAL BID UNTIL THE PROJECT IS FULLY PERMITTED.
2. ALL PRELIMINARY PRICING EFFORTS SHALL BE CONSIDERED TO BE ESTIMATES ONLY AND SHALL INCLUDE THE NECESSARY CONTINGENCIES, ALLOWANCES, ALTERNATES, ETC. AS APPROPRIATE TO ACCOUNT FOR MODIFICATIONS AND ADDITIONS THAT WILL OCCUR TO THE DRAWINGS DURING THE FINALIZATION OF THE DESIGN AND PERMITTING.
3. THE OWNER OR CONTRACTOR SHALL UTILIZE THE FOLLOWING MINIMUM CONTINGENCIES FOR EACH OF THE STRUCTURAL ELEMENT COSTS TO BE USED AT THE SOLE DISCRETION OF THE STRUCTURAL ENGINEER:

   1ST CITY SUBMITTAL SET 3% (MIN)
   ALL OF THE FINAL BID CONTINGENCIES NOT USED BY THE STRUCTURAL ENGINEER SHALL BE REFUNDED TO THE OWNER PRIOR TO CLOSEOUT OF THE PROJECT.
4. ANY MODIFICATIONS, DELETIONS, OR ELIMINATIONS TO THE STRUCTURAL BIDDING AND CONTINGENCY REQUIREMENTS, WITHOUT THE CONSENT OF THE STRUCTURAL ENGINEER, SHALL AUTOMATICALLY INDEMNIFY THE STRUCTURAL ENGINEER OF ANY COSTS THAT MAY ARISE DURING THE DESIGN AND CONSTRUCTION OF THE PROJECT.
5. WHERE DISCREPANCIES OCCUR WITHIN THE DRAWINGS THE CONTRACTOR WILL EITHER RESOLVE THE DISCREPANCIES WITH THE ARCHITECT BEFORE BIDDING OR INCLUDE THE GREATER COST ITEM IN THE BID AND RESOLVE THE DISCREPANCY PRIOR TO CONSTRUCTION.

BUILDING CODE:

2021 EDITION OF THE INTERNATIONAL BUILDING CODE AND STANDARDS REFERENCED THEREIN, WITH CITY OF PARKER, COLORADO.

LOADS:

ROOFS:(HIGH & LOW)

ROOF LIVE LOAD = 20 PSF (REDUCIBLE).
GROUND SNOW LOAD, P_g = 31.5 PSF
ROOF SNOW LOAD, P_f = 31.5 PSF (NON-REDUCIBLE).
SNOW EXPOSURE FACTOR, C_e = 1.0
SNOW THERMAL FACTOR, C_t = 1.0
SNOW IMPORTANCE FACTOR, I = 1.0
ROOF DEAD LOAD = 20PSF.
NET WIND UPLIFT = 6 PSF. (DESIGN BASED ON 0.6D – 0.6W)
STEEL ROOF JOISTS SHALL BE DESIGNED FOR A SUPERIMPOSED FUTURE MECHANICAL LOAD OF 400 LB AT ANY PANEL POINT. MECHANICAL LOADS SHOWN ON PLANS SHALL BE IN ADDITION TO THE REQUIREMENTS NOTED ABOVE.

ROOF LOADS INCLUDE 1.5 PSF ALLOWANCE FOR FIRE SPRINKLER PIPE BRANCH LINES. DESIGNERS OF STRUCTURAL MEMBERS ENGINEERED BY OTHERS SHALL COORDINATE WITH CONTRACTOR THE WEIGHTS AND LOCATIONS OF ALL FIRE SPRINKLER BRANCH LINES GREATER THAN 3" DIA. THESE BRANCH LINES SHALL BE SHOWN ON SHOP DRAWINGS SUBMITTED FOR REVIEW.

LATERAL:

WIND:

ULTIMATE DESIGN WIND SPEED (3-SECOND GUST), V_{ult} = 107 MPH.
EXPOSURE C.
RISK CATEGORY: II.
INTERNAL PRESSURE COEFFICIENT = +0.18/–0.18.
COMPONENTS AND CLADDING WIND LOADS:
ROOF ZONE 1 = –33.4 PSF/+16 PSF.
ROOF ZONE 2 = –44.3 PSF/+16 PSF.
ROOF ZONE 3 = –44.3 PSF/+16 PSF.
SEE COMPONENTS AND CLADDING WIND LOAD ROOF PLAN(S).
WALL ZONE 4 = –22.3 PSF/+20.4 PSF.
PARAPET WALL ZONE 4 = 20 PSF.
WALL ZONE 5 = –27.3 PSF/+20.4 PSF.
PARAPET WALL ZONE 5 = 44 PSF.

SEISMIC:

SEISMIC IMPORTANCE FACTOR, I = 1.0.
RISK CATEGORY, II.
MAPPED SHORT PERIOD SPECTRAL ACCELERATION, S_s = 0.200
MAPPED ONE SECOND SPECTRAL ACCELERATION, S_1 = 0.056
SOIL SITE CLASS, C.
DESIGN SHORT PERIOD SPECTRAL ACCELERATION, S_{ds} = 0.174
DESIGN ONE SECOND SPECTRAL ACCELERATION, S_{d1} = 0.056
SEISMIC DESIGN CATEGORY, B.
BASIC SEISMIC-FORCE-RESISTING SYSTEM = COMBINED RESISTING SYSTEM, SPECIAL REINFORCED MASONRY SHEAR WALLS.
DESIGN BASE SHEAR = 31.5 K.
SEISMIC RESPONSE COEFFICIENT, C_s = 0.05
RESPONSE MODIFICATION FACTOR (R)= 3.5.
ANALYSIS PROCEDURE USED = EQUIVALENT LATERAL FORCE PROCEDURE

FOR DEFLECTION/CAMBER CRITERIA OF STRUCTURAL MEMBERS ENGINEERED BY OTHERS, SEE SPECIFIC MEMBER'S SECTION BELOW.

FOUNDATIONS:

GEOTECHNICAL REPORT BY CTL THOMPSON, INC. JOB # DN49,636-125-R1, DATED OCTOBER 11, 2018. IMPROVEMENT TO THE BUILDING PAD SHOULD CONSIST OF REMOVAL OF ALL DEBRIS, UNCONTROLLED FILL AND EXPANSIVE CLAY OTHER DELETERIOUS MATERIAL THAT MAY EXIST WITH IN THE AREA TO A DEPTH OF 13'–0" MIN. ON THE PROPOSED CONSTRUCTION PAD (REFER TO SOILS REPORT) AND SHOULD BE REPLACED WITH ENGINEERING FILL AS PER SOILS REPORT AND GEOTECHNICAL ENGINEER RECOMMENDATIONS. PAD PREPARATION SHOULD EXTEND 5'–0" BEYOND FOOTINGS AT LEAST 2'–0" BELOW FINAL ADJACENT GRADE. ISOLATED AND CONTINUOUS FOOTINGS SHALL BEAR ON FIRM, UNDISTURBED SOIL (CONTROLLED COMPACTED FILL) 24" MINIMUM BELOW ADJACENT FINISHED GRADE, PAD GRADE OR EXISTING GRADE AS STATED IN GEOTECHNICAL REPORT. FINISHED GRADE (PAD GRADE) IS DEFINED AS TOP OF SLAB FOR INTERIOR FOOTINGS AND LOWEST ADJACENT GRADE WITHIN 5 FEET FOR PERIMETER FOOTINGS. POSSITIVE DRAINAGE AWAY FROM THE BUILDING SHALL EXTEND A MINIMUM OF 10'–0"; DESIGN SOIL BEARING VALUE = 2000 PSF. REFER TO GEOTECHNICAL REPORT FOR ADDITIONAL INFORMATION PRIOR TO COMMENCEMENT OF EARTHWORK. GEOTECHNICAL ENGINEER SHALL INSPECT AND APPROVE ALL FOUNDATION AND BUILDING PAD EXCAVATIONS PRIOR TO PLACEMENT OF CONCRETE.

CONCRETE:

SPECIFIED 28 DAY COMPRESSIVE STRENGTH f'c:

FOUNDATIONS ---------- 4,500 PSI
EXTERIOR SLAB ON GRADE ---------- 4,500 PSI
INTERIOR SLAB ON GRADE ---------- 4,500 PSI
SLAB ON GRADE (TUNNEL) ---------- 4,500 PSI

GENERAL:

ALL CAST-IN-PLACE CONCRETE CONSTRUCTION SHALL CONFORM TO THE REFERENCED EDITION OF THE ACI. MECHANICALLY VIBRATE ALL CONCRETE WHEN PLACED UNLESS NOTED OTHERWISE. ADMIXTURES CONTAINING CHLORIDES SHALL NOT BE USED. NO OTHER ADMIXTURES PERMITTED WITHOUT APPROVAL. FOR CONCRETE WITHOUT PLASTICIZER, MAXIMUM SLUMP 4 1/2" AT POINT OF PLACEMENT U.N.O. IF PLASTICIZER IS USED, A HIGHER FINAL SLUMP MAY BE ALLOWED UPON STRUCTURAL ENGINEER'S APPROVAL.

FOR REINFORCING INFORMATION, SEE REINFORCING SECTION OF G.S.N., PLANS, SCHEDULES AND DETAILS.

UNLESS NOTED OTHERWISE ON THE DRAWINGS, THE EMBEDMENT OF CONDUITS, PIPES, SLEEVES, ETC. OF ANY MATERIAL SHALL NOT BE PERMITTED WITHIN ANY CONCRETE STRUCTURAL ELEMENT (IE: COLUMNS, BEAMS, ELEVATED SLABS, ETC.) OR STRUCTURAL CONCRETE TOPPINGS WITHOUT THE EXPRESSED APPROVAL OF THE STRUCTURAL ENGINEER.

FLY ASH – IF PERMITTED BY ARCHITECTURAL SPECIFICATIONS, SHALL BE LIMITED TO 25% OF TOTAL CEMENTITIOUS MATERIALS BY WEIGHT. FLY ASH SHALL BE INCLUDED IN THE CALCULATION OF W/C RATIOS SPECIFIED ABOVE. FLY ASH ADDITIVES SHALL NOT BE USED ON SLABS WITH A BURNISHED OR ACID FINISH.

TEST DATA FOR EACH CONCRETE MIX SHALL BE SUBMITTED FOR REVIEW PER CHAPTER 5 OF ACI 318. REFERENCE FIGURE R5.3 FOR SUBMITTAL REQUIREMENTS AND OPTIONS. CONCRETE MIX DESIGNS THAT ARE SUBMITTED WITHOUT THE APPROPRIATE TEST DATA CANNOT BE REVIEWED.

SLABS ON GRADE:

MAXIMUM SLUMP WITHOUT PLASTICIZER AT POINT OF PLACEMENT SHALL BE 5 INCHES. (FOR OR HIGH TRAFFIC SLAB USES SUCH AS THE TUNNEL SLAB, MIX DESIGN SHALL HAVE A MINIMUM AMOUNT OF CEMENTITIOUS MATERIALS (CEMENT PLUS FLY ASH), 540 POUNDS PER CUBIC YARD (FOR 3/4 INCH NOMINAL MAXIMUM AGGREGATE SIZE) PER ACI 302.1R-04 TABLE 6.2). MIX DESIGNS SHALL TAKE CARE TO PROVIDE THE LARGEST POSSIBLE SIZE OF COARSE AGGREGATE WHILE MAINTAINING CONCRETE WORKABILITY. NOMINAL MAXIMUM AGGREGATE SIZE SHALL NOT BE LESS THAN 3/4 INCH NOR MORE THAN 1/3 THE DEPTH OF THE SLAB. MIX DESIGNERS SHALL SUBMIT SLAB ON GRADE DESIGNS WITH SHRINKAGE CHARACTERISTICS NOT EXCEEDING 0.00078 IN/IN TO MEET THE REQUIREMENTS OF ACI 360R–06, FIG5.6 FOR TYPICAL CONCRETE. SLABS SHALL BE PLACED ON A FLAT, SMOOTH, FIRM, COMPACTED SUBGRADE.

CONCRETE SHALL BE MIXED, PLACED, FINISHED AND CURED PER REFERENCED EDITION OF ACI 302.1 FOR THE APPROPRIATE FLOOR CLASS TYPE PER TABLE 1.1 AND SECTION 7. CURING COMPOUND SHALL BE COMPATIBLE WITH ARCHITECTURAL FLOOR FINISH.

SLABS ON GRADE SHALL BE VIBRATED ONLY AT TRENCHES, FLOOR DUCTS, TURNDOWNS, ETC. CAST CLOSURE POUR AROUND COLUMNS AFTER SLAB LOAD IS APPLIED. UNLESS APPROVED OTHERWISE IN WRITING BY THE ARCHITECT, ALL CONCRETE SLABS ON GRADE SHALL BE BOUND BY CONTROL JOINTS (CONSTRUCTION OR SAW CUT) PER TYPICAL DETAILS, AS SHOWN ON THE FOUNDATION PLAN, SUCH THAT THE ENCLOSED AREA DOES NOT EXCEED 150 SQUARE FEET. CONSTRUCTION CONTROL JOINTS NEED ONLY OCCUR AT EXPOSED EDGES DURING PLACING. ALL CONTROL JOINTS MAY BE SAW CUT. SLAB REINFORCING, WHERE SHOWN, SHALL NOT EXTEND MORE THAN 125 FEET WITHOUT STOPPING THE REINFORCEMENT AT A CONTROL JOINT.

JOINTS SHALL BE FILLED OR SEALED AS SPECIFIED IN ARCHITECTURAL SPECIFICATIONS. AT A MINIMUM, JOINTS IN SLABS SUBJECT TO SOLID RUBBER, HARD URETHANE, OR NYLON CASTERS OR STEEL WHEEL TRAFFIC SHALL BE FILLED WITH A SEMI–RIGID EPOXY OR POLYUREA CONSISTING OF 100 PERCENT SOLIDS AND A MINIMUM SHORE HARDNESS OF A–80 PER ASTM D 2240. FILLER MATERIAL SHOULD BE INSTALLED THE FULL JOINT DEPTH, WITHOUT A BACKER ROD, AND FLUSH WITH THE FLOOR SURFACE VIA OVERFILLING THEN SHAVED FLAT. JOINT FILLING SHOULD BE DELAYED AS LONG AS POSSIBLE TO ACCOMMODATE THE MAXIMUM POSSIBLE SLAB SHRINKAGE.

VAPOR BARRIER, IF REQUIRED BY ARCHITECTURAL SPECIFICATION OR SOILS REPORT SHALL CONSIST OF A MINIMUM 10 MIL MATERIAL LAPPED A MINIMUM OF 6 INCHES AND TAPED PER MANUFACTURER RECOMMENDATIONS. ANY DAMAGE TO VAPOR BARRIER SHALL BE REPAIRED PRIOR TO CONCRETE PLACEMENT. THE FLOOR SLAB SHALL BE PLACED DIRECTLY ON THE VAPOR BARRIER. THE VAPOR BARRIER SHALL BE PLACED ON TOP OF A SMOOTH FOUR INCH LAYER OF COMPACTED AGGREGATE BASE COURSE. CARE SHALL BE TAKEN TO KEEP MOISTURE AWAY FROM THE COMPACTED SUBBASE. SAND IS NOT AN ALTERNATIVE FOR THE BASE COURSE. GENERAL CONTRACTOR SHALL PROVIDE A LOW SHRINKAGE CONCRETE MIX DESIGN TO MINIMIZE POTENTIAL SLAB CURL. SLABS PLACED DIRECTLY ON VAPOR BARRIERS SHALL BE REINFORCED, SEE FOUNDATION PLAN.

CONCRETE INSERTS:

THIN SLAB TYPE INSERTS SHALL BE GALVANIZED AND HAVE THE FOLLOWING MINIMUM WORKING LOADS (4:1 RATIO OF ULTIMATE TO WORKING VALUES IS ASSUMED):

	WORKING LOAD	
BOLT DIAMETER	SHEAR	TENSION
1/2"	1,000 LBS.	650 LBS.
5/8"	1,250 LBS.	700 LBS.
3/4"	1,600 LBS.	850 LBS.

COIL LOOP INSERTS SHALL BE GALVANIZED AND HAVE THE FOLLOWING MINIMUM WORKING LOADS (3:1 RATIO OF ULTIMATE TO WORKING VALUES IS ASSUMED):

	WORKING LOAD	
BOLT DIAMETER	SHEAR	TENSION
1/2"	2,200 LBS.	2,280 LBS.
5/8"	3,000 LBS.	3,620 LBS.
3/4"	3,100 LBS.	3,660 LBS.

THREADED COIL RODS, COIL NUTS, ETC., USED IN CONJUNCTION WITH CONCRETE INSERTS, SHALL HAVE A WORKING LOAD EQUAL TO OR GREATER THAN THE CORRESPONDING CONCRETE INSERT. CONTRACTOR SHALL SUBMIT MANUFACTURER'S SIZE AND STRENGTH DATA PRIOR TO CONSTRUCTION TO THE STRUCTURAL ENGINEER THRU THE ARCHITECT. VALUES LISTED ABOVE ARE FOR RICHMOND STRUCTURAL CONNECTION INSERTS.

UNLESS NOTED OTHERWISE ON THE DRAWINGS, MECHANICAL SPLICES FOR REINFORCING BARS SHALL UTILIZE BAR–LOCK COUPLER SYSTEMS PER ICC ESR–2495 OR APPROVED EQUIVALENT.

UNLESS NOTED OTHERWISE ON THE DRAWINGS, "THREADED COUPLERS" WHERE INDICATED FOR #11 BARS AND SMALLER SHALL BE DAYTON DBD REINFORCING BAR MECHANICAL SPLICE SYSTEM PER ICC ESR–2649.

MASONRY:

GENERAL:

ALL CONSTRUCTION SHALL BE PER REFERENCED ACI 530/530.1, BUILDING CODE REQUIREMENTS AND SPECIFICATION FOR MASONRY STRUCTURES. CONCRETE MASONRY ASSEMBLY SHALL BE PLACED IN A RUNNING BOND PATTERN AND HAVE A NET COMPRESSIVE STRENGTH OF $f'm$ = 1,500 PSI AND BE COMPOSED OF THE FOLLOWING COMPONENTS: MEDIUM WEIGHT, GRADE N, HOLLOW CONCRETE MASONRY UNITS PER ASTM C90 WITH A NET COMPRESSIVE STRENGTH OF 1,900 PSI, MORTAR SHALL BE TYPE S PER ASTM C270 WITH A MINIMUM COMPRESSIVE STRENGTH OF 1,800 PSI, GROUT SHALL BE PER ASTM C476 WITH A MINIMUM COMPRESSIVE STRENGTH OF 2,000 PSI. DETERMINATION OF COMPRESSIVE STRENGTH FOR EACH CONCRETE MASONRY ASSEMBLY SHALL BE PER THE UNIT STRENGTH METHOD OR THE PRISM TEST METHOD PER IBC SECTION 2105.2.2. PRISM TESTING IS NOT REQUIRED IF THE UNIT STRENGTH METHOD IS USED.

MECHANICALLY VIBRATE GROUT IMMEDIATELY AFTER POURING AND AGAIN 5 TO 10 MINUTES LATER. PROVIDE CLEANOUTS IF GROUT LIFT EXCEEDS 5'–0" IN BLOCK WALLS. MAXIMUM GROUT LIFT SHALL BE 6'–0". WHEN APPROVED BY THE STRUCTURAL ENGINEER AND BUILDING OFFICIAL, GROUT LIFTS MAY BE GREATER THAN 6'–0" IF IT CAN BE DEMONSTRATED BY CONTRACTOR THAT THE GROUT SPACES CAN BE PROPERLY FILLED. FILL CELLS SOLIDLY WITH GROUT IN LIFTS AND STOP POURS 1 1/2" BELOW THE TOP OF UNITS TO FORM A KEY AT FOUR POINTS. UNLESS NOTED OTHERWISE ON THE PLANS, PLACE CONTROL JOINTS IN MASONRY WALLS SUCH THAT NO STRAIGHT RUNS OF WALL EXCEEDS 24'–0". CONTROL JOINTS SHALL NOT OCCUR AT WALL CORNERS, INTERSECTIONS, ENDS, WITHIN 24" OF CONCENTRATED POINTS OF BEARING OR JAMBS, OR OVER OPENINGS UNLESS SPECIFICALLY SHOWN ON THE STRUCTURAL DRAWINGS. ALL MASONRY BELOW FINISHED FLOOR OR GRADE SHALL BE GROUTED SOLID.

VERTICAL REINFORCING:

1 #5 IN CENTER OF GROUT AT CENTER OF WALL, CONTINUOUS FULL HEIGHT OF WALL AT ALL CORNERS, INTERSECTIONS, WALL ENDS, BEAM BEARINGS, JAMBS, EACH SIDE OF CONTROL JOINTS AND AT INTERVALS NOT TO EXCEED 48" O.C. UNLESS NOTED OTHERWISE. TIE AT 8'–0" VERTICALLY WITH SINGLE WIRE LOOP TIE BY ALL WIRE PRODUCTS COMPANY. DOWEL VERTICAL REINFORCING TO FOUNDATION WITH DOWELS TO MATCH VERTICAL REINFORCING.

HORIZONTAL REINFORCING:

2 #5 IN MINIMUM 16" DEEP GROUTED CONTINUOUS BOND BEAM AT ELEVATED FRAMING ASSEMBLIES. 1 #5 IN MINIMUM 8" DEEP GROUTED CONTINUOUS BOND BEAM AT TOP OF PARAPETS AND FREESTANDING WALLS. PLACE THESE BARS CONTINUOUS THRU CONTROL JOINTS PER TYPICAL DETAIL. TO MAINTAIN BOND BEAM CONTINUITY, INSTALL BENT BARS PER TYPICAL DETAILS TO MATCH HORIZONTAL BOND BEAM REINFORCING AT CORNERS AND INTERSECTIONS. STANDARD WEIGHT (NO. 9 GAGE WIRE) HOHMANN AND BARNARD INC. OR EQUIVALENT LADDER MESH TYPE JOINT REINFORCEMENT AT 16" O.C. ALL JOINT REINFORCING SHALL BE EITHER HOT–DIPPED GALVANIZED OR STAINLESS STEEL FOR INTERIOR WALLS ONLY – JOINT REINFORCING MAY BE MILL GALVANIZED AT CONTRACTORS OPTION.

LAP SPLICES:

LAP SPLICES FOR VERTICAL AND HORIZONTAL REINFORCING SHALL BE PER TYPICAL DETAIL. DO NOT SPLICE WITHIN 8'–0" OF CONTROL JOINTS. LAP HORIZONTAL LADDER TYPE JOINT REINFORCING 12" MINIMUM.

FOR ADDITIONAL REINFORCING INFORMATION, SEE REINFORCING SECTION OF G.S.N., PLANS, SCHEDULES AND DETAILS.

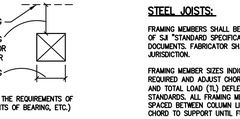
VENEER TIES:

TYPICAL VENEER ATTACHMENT TO MASONRY WALLS SHALL CONSIST OF GALVANIZED STEEL HB–5213–2X ADJUSTABLE VENEER ANCHORAGE SYSTEM MANUFACTURED BY HOHMANN AND BARNARD, INC. ANCHORS CONSIST OF A 3/16" ROUND WIRE PINTLE UNIT EXTENDING 3" INTO VENEER AND 14 GAGE STEEL L–SHAPED PLATE ATTACHED TO THE MASONRY WALL AT 16" O.C. EACH WAY. STEEL PLATES SHALL BE ATTACHED TO MASONRY WALLS WITH 523 BRASS EXPANSION BOLTS AS MANUFACTURED BY HOHMANN AND BARNARD, INC. INSTALL PER MANUFACTURER'S SPECIFICATIONS. ALTERNATE ATTACHMENT SYSTEM MAY BE SUBMITTED BY CONTRACTOR TO ARCHITECT/ENGINEER FOR APPROVAL AND SHALL CONFORM TO THE APPLICABLE CHAPTER OF THE BUILDING CODE.

MISCELLANEOUS LINTELS:

UNLESS NOTED OTHERWISE OR SHOWN, PROVIDE THE FOLLOWING LINTELS IN 8" MASONRY WALLS. USE THESE LINTEL ANGLES FOR OPENINGS REQUIRED BY OTHER DISCIPLINES (MECHANICAL, ELECTRICAL, PLUMBING, ETC.). PROVIDE MINIMUM 5" BEARING OF ANGLES ON JAMBS. SEE SKETCH BELOW WHERE THESE LINTEL ANGLES MAY BE USED. (NOTE: WHERE THE REQUIREMENTS OF THIS SKETCH ARE NOT POSSIBLE, NOTIFY THE STRUCTURAL ENGINEER PRIOR TO START OF MASONRY CONSTRUCTION.)

OPENING WIDTH	LINTEL ANGLES
0'–0" TO 3'–4"	2 – 3 1/2" X 2 1/2" X 1/4" (SLV)
3'–5" TO 4'–8"	2 – 3 1/2" X 3" X 1/4" (SLV)
4'–9" TO 6'–0"	2 – 3 1/2" X 3 1/2" X 1/4"
6'–1" OR GREATER	NOTIFY STRUCTURAL ENGINEER



THESE LINTELS, OR THE OPENING THEY SPAN, SHALL NOT BE PLACED SO AS TO INTERFERE WITH THE REQUIREMENTS OF OTHER STRUCTURAL ELEMENTS (I.E. BOND BEAMS, LINTELS, CONTROL JOINTS, CONCENTRATED POINTS OF BEARING, ETC.) WITHOUT THE PRIOR APPROVAL OF THE STRUCTURAL ENGINEER.

SOLID GROUT SHALL BE PROVIDED BETWEEN WEBS AND MASONRY FACE SHELLS FOR FULL LENGTH OF ALL STEEL LINTELS. MORTAR MAY BE USED FOR GROUT FOR THIS PURPOSE ONLY. FACE UNITS, SOAPS, ROMANS, ETC., SHALL BE LAID WITH FULL HEAD AND BED JOINTS.

FOR ADDITIONAL INFORMATION AT OPENINGS IN MASONRY WALLS, SEE TYPICAL DETAILS.

REINFORCING:

ALL REINFORCING PER ORSI SPECIFICATIONS AND HANDBOOK. ASTM A615 (f_y = 60 KSI / GRADE 60) DEFORMED BARS FOR ALL BARS #5 AND LARGER (AND FOR ALL CONCRETE WALLS, BEAMS, SLABS AND COLUMN REINFORCING). ALL REINFORCING PER ORSI SPECIFICATIONS AND HANDBOOK. ASTM A615 (f_y = 60 KSI / GRADE 60) DEFORMED BARS FOR ALL BARS, U.N.O. ASTM A615 (f_y = 75 KSI / GRADE 75) DEFORMED BARS FOR BARS #5 AND LARGER AS NOTED ON PLANS. ASTM A615 (f_y = 40 KSI / GRADE 40) DEFORMED BARS FOR #4 BARS AND SMALLER. WHERE SHOWN ON DRAWINGS ALL GRADE 60 REINFORCING TO BE WELDED SHALL BE ASTM A706. WELDED WIRE FABRIC PER ASTM A185, WIRE PER ASTM A82. NO TACK WELDING OF REINFORCING BARS ALLOWED WITHOUT PRIOR REVIEW OF PROCEDURE WITH THE STRUCTURAL ENGINEER. REFERENCED ACI CODE AND DETAILING MANUAL APPLY. CLEAR CONCRETE COVERAGES AS FOLLOWS:

CAST AGAINST AND PERMANENTLY EXPOSED TO EARTH ---------- 3"
EXPOSED TO EARTH OR WEATHER
- #6 OR LARGER ---------- 2"
- #5 AND SMALLER ---------- 1 1/2"

ALL OTHER PER REFERENCED EDITION OF ACI 318

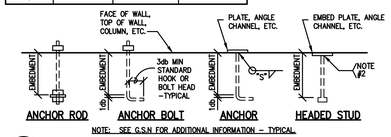
ALL REINFORCING SHALL BE CHAIRED TO ENSURE PROPER CLEARANCES. SUPPORT OF FOUNDATION REINFORCING MUST PROVIDE ISOLATION FROM CORROSION BY USE OF A PLASTIC OR CONCRETE CHAIR. DUCT–TAPE COVERED REINFORCING IS NOT AN ACCEPTABLE CHAIR.

ALL DIMENSIONS REFERENCED IN DRAWINGS AS "CLEAR" SHALL BE FROM FACE OF STRUCTURE TO EDGE OF REINFORCING, AND SHALL NOT BE LESS THAN STATED, NOR GREATER THAN "CLEAR" DIMENSION PLUS 3/8". ALL OTHERS SHALL BE PLUS OR MINUS 1/4" TYPICAL UNLESS NOTED OTHERWISE.

FIELD BENDING OR STRAIGHTENING OF DEFORMED BARS SHALL BE LIMITED TO #5 BARS AND SMALLER AND SHALL BE FIELD BENT OR STRAIGHTENED ONLY ONCE. ANY BEND SHALL BE LIMITED TO 90 DEGREES. IF FIELD BENDING OR STRAIGHTENING OF #5 BARS OR LARGER IS REQUIRED, OR IF A SECOND BEND IS REQUIRED FOR #5 BARS AND SMALLER, HEAT SHALL BE APPLIED FOR BEN

BOLT DIAMETER (db)	VERT BOLT EMBEDMENT LENGTH	HORIZ BOLT EMBEDMENT LENGTH	ANCHOR FILLET WELD SIZE, "S".
1/2"	6"	4"	1/4"
5/8"	6"	4"	5/16"
3/4"	7"	5"	5/16"
7/8"	8"	6"	5/16"
1"	9"	7"	3/8"
1 1/8"	10"	8"	-----
1 1/4"	11"	9"	-----

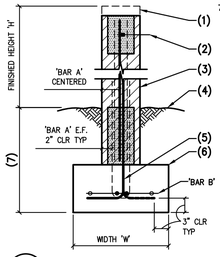
NOTES:
1. PROVIDE ANCHORS, ANCHOR RODS AND ANCHOR BOLTS PER THIS SCHEDULE UNLESS NOTED OTHERWISE ON PLANS, SCHEDULES OR DETAILS.
2. AUTOMATIC WELDED TO DEVELOP FULL CAPACITY OF HIGH STRENGTH HEADED STUDS.
3. THICKNESS OF DRYPACK DOES NOT APPLY TOWARDS EMBEDMENT.
4. BOLT/PLATE EDGE CLEARANCES PER THE FOLLOWING – TYP. U.N.O.:
   3/4" DIA OR LESS – 1 1/4"
   7/8" DIA ---------- 1 1/2"
   1" DIA ---------- 1 3/4"
   1 1/8" DIA ------- 2"
   1 1/4" DIA ------- 2 1/4"
   OVER 1 1/4" DIA -- 1.75xDIA



NOTE: SEE G.S.N FOR ADDITIONAL INFORMATION – TYPICAL

01 *TYPICAL ANCHOR ROD, ANCHOR BOLT, ANCHOR AND HEADED STUD SCHEDULE AND BOLT/PLATE EDGE CLEARANCES* NO SCALE

NOTES:
1. TOP OF FINISHED WALL AS OCCURS.
2. 1 #5 CONTINUOUS IN 8" DEEP GROUTED BOND BEAM.
3. 8" MASONRY WALL WITH VERTS PER SCHEDULE AND HORIZONTAL REINFORCING PER G.S.N. – GROUT SOLID BELOW GRADE.
4. FINISHED GRADE OR TOP OF PAVING AS OCCURS.
5. DOWELS TO MATCH AND LAP VERTICAL WALL REINFORCING PER G.S.N. – ALTERNATE BENDS AT CENTERED BARS, OVERLAP BENDS AT EACH FACE BARS.
6. 12" THICK CONCRETE FOOTING WITH REINFORCING PER SCHEDULE.
7. FOR DEPTH OF FOOTING, SEE G.S.N.

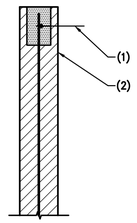


8" WALL / FOOTING SCHEDULE			
H	BAR A	W	BAR B
UP TO 4'-0"	#5 AT 40" O.C.	1'-8"	2 #5
4'-1" TO 6'-0"	#5 AT 32" O.C.	3'-6"	2 #5
6'-1" TO 6'-11"	#5 AT 24" O.C.	4'-6"	4 #5 CONT.
7'-0" TO 8'-0"	#5 AT 16" O.C. EACH FACE	5'-0"	4 #5 T&B
8'-1" TO 9'-0"	#5 AT 16" O.C. EACH FACE	5'-6"	5 #5 T&B
9'-1" TO 10'-0"	#5 AT 8" O.C. EACH FACE	6'-0"	6 #5 T&B

NOTE:
REFER TO ARCH'L/CIVIL PLANS FOR LOCATION OF WALLS.

02 *8" MASONRY FREE–STANDING WALL, FOOTING AND SCHEDULE (TRASH ENCLOSURE/VACUUM ENCLOSURE/SITE WALLS)* NO SCALE

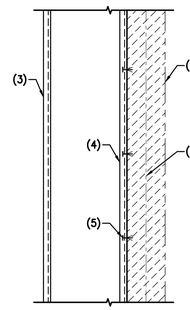
NOTES:
1. BOND BEAM PER G.S.N.
2. MASONRY WALL – FOR TOP OF WALL, SEE ARCH'L.



NOTE:
FOR ADDITIONAL INFORMATION, SEE ARCH'L DRAWINGS.

03 *MASONRY PARAPET* NO SCALE

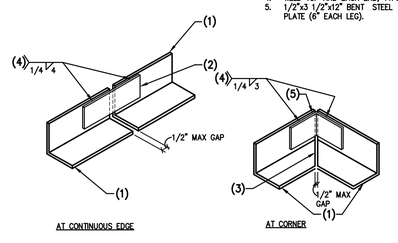
NOTES:
1. EXISTING MASONRY WALL.
2. VERTICAL WALL REINFORCING IN SOLID GROUTED CELL.
3. STEEL STUD WALL.
4. STEEL STUD – INSTALL TRACK GAGE UNPUNCHED.
5. SIMPSON POWER FASTENERS AT 32" O.C. (1 1/2" PENETRATION).



NOTE:
THIS DETAIL APPLIES TO ALL STRUCTURAL STEEL STUD WALLS AT EXISTING MASONRY WALLS.

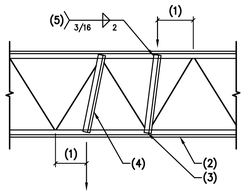
04 *TYPICAL STEEL STUDS AT EXISTING MASONRY WALL* NO SCALE

NOTES:
1. STEEL LEDGER ANGLE – FOR SIZE AND LOCATION, SEE PLAN.
2. STEEL PLATE 3/8" X 3 1/2" X 12" LONG TYPICAL U.N.O.
3. MITER CUT ANGLE.
4. WELD TOP AND EACH END, TYP.
5. 1/2"x3 1/2"x12" BENT STEEL PLATE (6" EACH LEG).



05 *TYPICAL SPLICE IN CONTINUOUS STEEL LEDGER ANGLE* NO SCALE

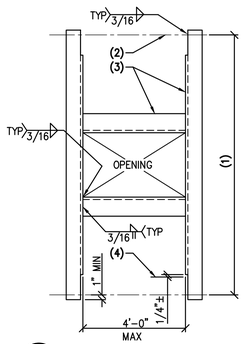
NOTES:
1. ADDITIONAL MEMBER REQUIRED WHEN LOAD IS MORE THAN 4" FROM PANEL POINT.
2. STEEL JOIST.
3. STEEL ANGLE 2"x2"x3/16" EACH SIDE FROM TOP CHORD TO NEAREST BOTTOM CHORD PANEL POINT.
4. STEEL ANGLE 2"x2"x3/16" EACH SIDE FROM BOTTOM CHORD TO NEAREST TOP CHORD PANEL POINT.
5. TYP EACH ANGLE EACH END.



NOTE:
PROVIDE THIS DETAIL WHEN CONCENTRATED LOAD EXCEEDS 100 LBS. – NOTIFY ENGINEER WHEN LOAD EXCEEDS 400 LBS.

06 *ADDITIONAL WEB MEMBERS FOR CONCENTRATED LOAD OCCURRING AWAY FROM JOIST PANEL POINT* NO SCALE

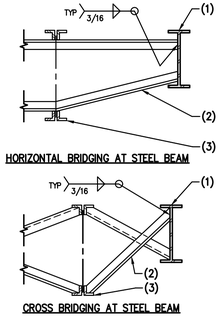
NOTES:
1. SEE PLAN FOR SPACING (8'–0" MAXIMUM).
2. CENTERLINE OF FRAMING MEMBER.
3. ANGLE 4"x4"x1/4".
4. FACE OF FRAMING MEMBER.



NOTE:
A. FOR CLARITY, ROOF DECK OMITTED.
B. VERIFY OPENING SIZE WITH APPROPRIATE TRADE.

07 *PLAN – TYPICAL OPENING IN FRAMING* NO SCALE

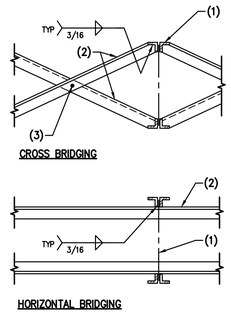
NOTES:
1. STEEL BEAM.
2. BRIDGING PER MFR'S RECOMMENDATIONS – FOR CONNECTION AT JOIST, SEE OTHER DETAILS.
3. STEEL JOIST.



NOTE:
FOR CLARITY, STEEL DECK OMITTED. FOR ADDITIONAL INFORMATION, SEE PLAN AND G.S.N.

08 *STEEL JOIST BRIDGING TO STEEL BEAM* NO SCALE

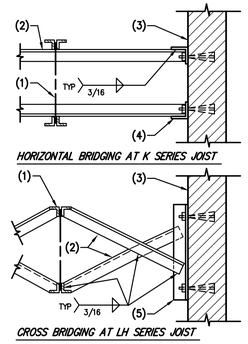
NOTES:
1. STEEL JOISTS.
2. BRIDGING SIZE PER MFR. RECOMMENDATIONS.
3. 1/2" DIA BOLT.



NOTE:
FOR CLARITY, STEEL DECK OMITTED. FOR ADDITIONAL INFORMATION, SEE PLAN AND G.S.N.

09 *TYPICAL BRIDGING AT STEEL JOISTS* NO SCALE

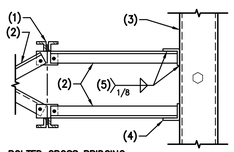
NOTES:
1. STEEL JOIST.
2. BRIDGING AS REQUIRED BY JOIST MANUFACTURER.
3. MASONRY WALL AS OCCURS. FOR SIZE AND TYPE SEE PLAN.
4. STEEL ANGLE 3" X 3" X 1/4" X 4" LONG WITH 1 – 5/8" DIA. EXPANSION BOLT AT CONCRETE WALLS.
5. STEEL ANGLE 3" X 3" X 1/4" X AS REQUIRED WITH 2 – 5/8" DIA. EXPANSION BOLTS



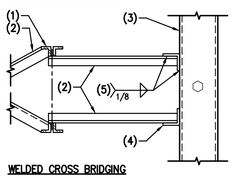
NOTE:
A. CROSS BRIDGING DETAIL SHALL APPLY FOR K SERIES JOISTS WHERE REQUIRED BY MFR.
B. AT MASONRY WALLS USE 5/8"ø EPOXY BOLTS IN GROUTED CELL. WHERE CELL IS UNGROUTED, KNOCK OUT FACE SHELL AND GROUT ANCHOR BOLT IN PLACE.

10 *TYPICAL STEEL JOIST BRIDGING TO WALL* NO SCALE

NOTES:
1. STEEL JOIST.
2. BRIDGING AS REQUIRED BY JOIST MANUFACTURER.
3. METAL STUD WALL – FOR SIZE AND TYPE, SEE PLAN.
4. STEEL ANGLE 3"x3"x1/4"x32" LONG.
5. EACH STUD.



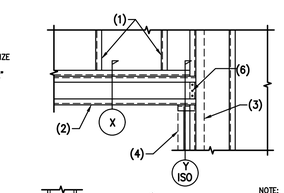
BOLTED CROSS BRIDGING



WELDED CROSS BRIDGING

11 *STEEL JOIST CROSS BRIDGING AT METAL STUD WALL* NO SCALE

NOTES:
1. STEEL STUDS.
2. CONTINUOUS TRACK.
3. CONTINUOUS MULTIPLE KING STUDS PER SCHEDULE.
4. TRIMMER STUDS PER SCHEDULE.
5. #10 SCREW AT 24" O.C. –EACH SIDE OF TRACK TO BOX HEADER STUDS.
6. FASTEN TRACK PIECE TO LINTEL STUDS WITH 3 #10 SCREWS EACH SIDE OF HEADER.
7. 16 GA MIN. PIECE OF TRACK.
8. (4) #10 SCREWS, TRACK TO KING STUD.
9. KING STUD.

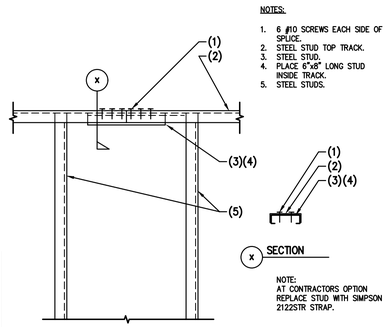


NOTE:
TYPICAL CONDITION IS TO USE TRIMMER AND KING STUDS. FOR OTHER CONDITIONS SEE DETAIL CUTS ON PLANS.

6" STUDS	ROUGH OPENING WIDTH	NUMBER OF TRIMMER STUDS	NUMBER OF KING STUDS	LINTEL SIZE
	0'–0" – 5'–0"	1	1	(2)600S162–43
	5'–1" – 8'–0"	1	2	(2)800S162–43
	8'–1" – 12'–0"	2	2	(2)1000S162–54
	11'–1" – 15'–0"	2	3	(2)1200S162–68

12 *TYPICAL STEEL LINTEL 'SL'* NO SCALE

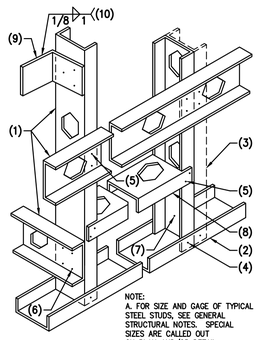
NOTES:
1. 6 #10 SCREWS EACH SIDE OF SPLICE.
2. STEEL STUD TOP TRACK.
3. STEEL STUD.
4. PLACE 6"x6" LONG STUD INSIDE TRACK.
5. STEEL STUDS.



NOTE:
AT CONTRACTORS OPTION REPLACE STUD WITH SIMPSON 2122STR STRAP.

13 *TYPICAL STEEL TOP TRACK SPLICE* NO SCALE

NOTES:
1. STEEL STUD.
2. UNPUNCHED STEEL STUD TRACK – ATTACHMENT REQUIRED 1/2" DIA. EXPANSION BOLTS AT 48" O.C. (2 MINIMUM) OR 1/4"-13/4" LONG POWDER DRIVEN PINS AT 12" O.C. FASTENER SHALL HAVE ICC REPORT FOR SAME INSTALLATION.
3. MULTIPLE OR INTERSECTING STUDS WHERE OCCUR. CONNECT WITH 2 ROWS #10 S.M. SCREWS AT 24" O.C. STAGGERED SPACING. AT INTERSECTING STUDS 1 ROW OF SCREWS.
4. #10 S.M. SCREWS EACH SIDE, EACH STUD.
5. 2 #10 S.M. SCREWS.
6. 4 #10 S.M. SCREWS.
7. #10 S.M. SCREWS AT 12" O.C. AT DOUBLE STUDS.
8. STUD BLOCKING.
9. 18 GA CLIP ANGLE BY STUD MFR WITH 3 #10 S.M. SCREWS AT EACH STUD WHERE SHOWN IN DETAILS.
10. TYP WELD CLIP TO FRAMING MEMBER OR AS NOTED IN DETAILS.

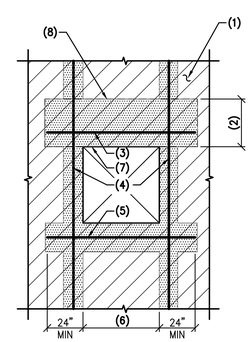


NOTE:
A. FOR SIZE AND GAGE OF TYPICAL STEEL STUDS, SEE GENERAL STRUCTURAL NOTES. SPECIAL SIZES ARE CALLED OUT ON PLAN AND/OR DETAIL.

B. INSTALL ALL SCREWS PER STEEL STUD MANUFACTURES ASSOC. SPECIFICATIONS.
C. S.M. (SHEET METAL) SCREWS PER G.S.N.

14 *TYPICAL STEEL STUD WALL – SCREW CONNECTION* NO SCALE

NOTES:
1. MASONRY WALL.
2. DEPTH OF MASONRY LINTEL – SEE PLANS AND DETAILS.
3. LINTEL REINFORCING.
4. JAMB REINFORCING PER G.S.N. OR DETAILS CUT ON PLAN.
5. 2 #5 BARS IN 8" DEEP SOLID GROUTED BOND BEAM – HOOK BARS UP AT WALL CORNERS WHERE MINIMUM DIMENSION CANNOT BE ACHIEVED.
6. OPENING WIDTH.
7. LINTEL BLOCK AT OPENING.
8. OPEN ENDED BLOCK FULL DEPTH OF LINTEL. EXTEND 24" EACH SIDE.



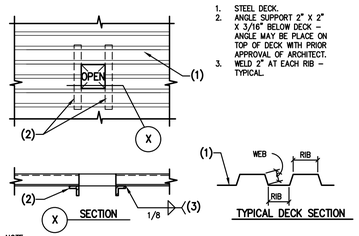
15 *TYPICAL OPENING IN MASONRY WALL* NO SCALE

	CLASS B TENSION SPLICE LENGTHS						COMP. BARS	
CONC PSI	f'c=2,500/3,000 PSI		f'c = 4,000 PSI		f'c = 5,000 PSI		f'c = ≥ 3,000	
BAR LOCATION / SIZE (METRIC)	REGULAR	TOP	REGULAR	TOP	REGULAR	TOP	STD LAP	ENCLOSED W/ SPIRAL TIES
#3 (10)	24"	31"	19"	24"	17"	22"	12"	12"
#4 (13)	32"	41"	25"	32"	22"	29"	15"	12"
#5 (16)	39"	51"	31"	40"	28"	36"	19"	14"
#6 (19)	47"	61"	37"	48"	33"	43"	23"	17"
#7 (22)	69"	89"	54"	70"	49"	63"	26"	20"
#8 (25)	78"	102"	62"	80"	55"	72"	30"	23"
#9 (29)	88"	115"	70"	91"	63"	81"	34"	25"
#10 (32)	99"	129"	79"	102"	70"	91"	38"	28"
#11 (36)	110"	143"	87"	113"	78"	101"	42"	31"

NOTES:
1. TOP BARS ARE ANY HORIZONTAL BARS PLACED SO THAT MORE THAN 12" OF FRESH CONCRETE IS CAST IN THE MEMBER BELOW THE REINFORCEMENT.
2. LAP SPLICES SHALL BE CLASS "B" TENSION LAP SPLICES PER LATEST EDITION OF ACI 318 UNLESS SPECIFICALLY NOTED OTHERWISE ON THE DRAWINGS OR SCHEDULES.
3. CONTACT STRUCTURAL ENGINEER IF CLEAR SPACING OF REINFORCEMENT IS LESS THAN OR ≤ EQUAL TO 2 BAR DIAMETERS (2db), OR IF CLEAR COVER IS LESS THAN THE BAR DIAMETER (db).
4. THIS TABLE IS BASED ON NORMAL WEIGHT CONCRETE.
5. FOR ADDITIONAL INFORMATION, SEE G.S.N., PLANS, SCHEDULES AND DETAILS.

16 *LAP SCHEDULE FOR REINFORCING STEEL IN CONCRETE* NO SCALE

NOTES:
1. STEEL DECK.
2. ANGLE SUPPORT 2" X 2" X 3/16" BELOW DECK – ANGLE MAY BE PLACE ON TOP OF DECK WITH PRIOR APPROVAL OF ARCHITECT.
3. WELD 2" AT EACH RIB – TYPICAL.



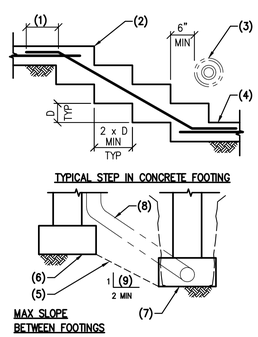
NOTE:
AN OPENING WHICH CUTS ONE WEB (4" MAX DIMENSION PERPENDICULAR TO RIBS), MAY BE CUT IN DECK WITHOUT ANY SPECIAL REINFORCING.

AN OPENING WHICH CUTS TWO WEBS (8" MAX DIMENSION PERPENDICULAR TO RIBS), WILL REQUIRE ANGLE SUPPORT SHOWN ABOVE.

ANY OPENING WHICH CUTS MORE THAN TWO WEBS, FRAME OPENING WITH TYPICAL ANGLE SUPPORT FRAME, SEE TYPICAL OPENING IN STEEL DECK DETAIL.

17 *TYPICAL SMALL OPENING IN STEEL DECK* NO SCALE

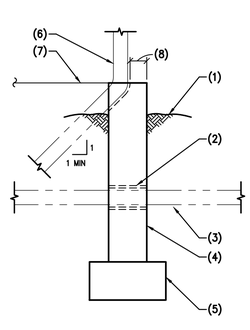
NOTES:
1. LAP PER G.S.N. (24" MIN) – TYP.
2. TOP OF WALL FOOTING.
3. PIPE THRU STEM WALL AS OCCURS – SEE TYPICAL DETAIL.
4. RETURN TO FOOTING THICKNESS AS SHOWN ON PLAN.
5. MAXIMUM SLOPE BETWEEN BOTTOM OF FOOTINGS SHALL BE PER SKETCH. STEP FOOTINGS AS REQUIRED, SEE TYPICAL DETAIL.
6. BOTTOM OF CONCRETE FOOTING.
7. BOTTOM OF ADJACENT FOOTING OR TRENCH. WHERE LOW TRENCH ONLY IS LOWER THAN SHOWN, SEE DETAIL (105–16.76).
8. PIPE ADJACENT TO STEM WALL TO NOT INTERFERE WITH FOOTING.
9. TYPICAL UNLESS NOTED OTHERWISE IN SOIL REPORT.



NOTE:
D = 2'–0" MAXIMUM.
FOR ADDITIONAL INFORMATION, SEE PLANS AND DETAILS.

18 *TYPICAL STEP IN CONCRETE FOOTING MAXIMUM SLOPE BETWEEN ADJACENT FOOTING OR TRENCH* NO SCALE

NOTES:
1. FINISHED GRADE WHERE OCCURS.
2. SLEEVE – PROVIDE 1/2" MINIMUM CLEARANCE AROUND PIPE/CONDUIT.
3. HORIZONTAL PIPE OR CONDUIT.
4. STEM WALL.
5. CONCRETE FOOTING.
6. VERTICAL PIPE OR CONDUIT WHEN LOCATED AT STEM WALL – TRANSITION AT FLOOR LINE.
7. FINISHED FLOOR LINE.
8. 1 1/2" MIN CLEAR EXTERIOR FACE OF WALL AND NOTCH. NO REINFORCING MAY BE CUT. DAMAGE TO STEM WALL SHALL BE REPAIRED AND PATCHED TO MATCH ADJACENT WALL.



NOTE:
A. NO PIPE SHALL PASS THRU FOOTINGS OR UNDER COLUMN FOOTINGS.
B. FOR ADDITIONAL INFORMATION, SEE PLANS AND DETAILS.

19 *PIPE AT FOUNDATION STEM WALL* NO SCALE

Jaramillo · Tonneson & Associates
consulting structural engineers
JTA Engineering, LLC
15925 S 46th St. Suite 129
Phoenix, AZ. 85048-0045
https://jtaengineering.com
480.442.2179 Sergio Jaramillo
602.492.6426 Joe Tonneson

PROJECT NUMBER: 2022152 | PROJECT MANAGER: SJ/jS

drawings that are not signed, sealed & dated by the engineer of record are considered preliminary and are not for construction. any requested changes after bid documents are issued will be considered a change order and will be billed hourly to the requesting party.

STAMP
COLORADO LICENSED
JOSEPH S. TONNESON
00523103
PROFESSIONAL ENGINEER
01/19/2023

JESSE GOLDMAN, ARCHITECT
2698 S COLORADO BLVD, SUITE 525
DENVER, CO 80222
(303) 962-9164

THESE DRAWINGS AND SPECIFICATIONS, AS INSTRUMENTS OF SERVICE, ARE AND SHALL REMAIN THE PROPERTY OF JESSE GOLDMAN, ARCHITECT. THE PROJECT FOR WHICH THEY ARE MADE IS EXECUTED THEREFROM IN WHOLE OR IN PART, SHALL BE USED BY ANY PERSON OR ENTITY ON OTHER PROJECTS, FOR ADDITIONS TO THIS PROJECT OR FOR COMPLETION OF THIS PROJECT WHEN PHASED WITHOUT THE WRITTEN CONSENT OF JESSE GOLDMAN, ARCHITECT OR HIS ARCHITECT OR HIS AFFILIATES. Copyright © 2022

QUICK N CLEAN CAR WASH

PARKER RD. & PINE LANE AVE.

PARKER, CO

2696 S COLORADO BLVD, SUITE 525
DENVER, CO 80222
(303) 962-9164
www.cshqa.com

CSHQA

PROJECT	DATE
20037.000	10–10–2022
DRAWN	CHECKED
JS	SJJ

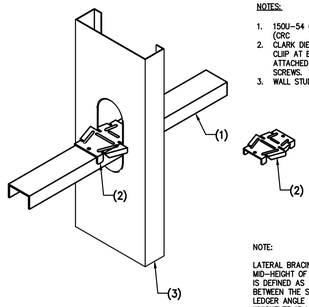
REVISED

SHEET TITLE

TYPICAL DETAILS

SHEET

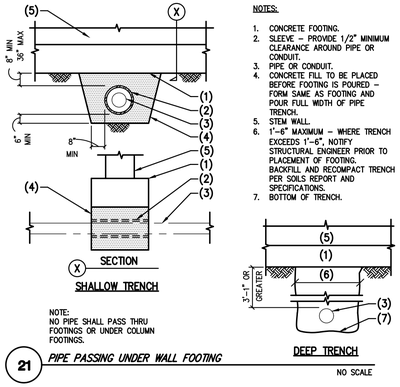
S0.2



NOTES:
1. 150U-54 (50 KSI) U-CHANNEL (CRC
2. CLARK DIETRICH FASTBRIDGE CLIP AT EACH STUD. ATTACHED TO CRC WITH #10 SCREWS. FILL ALL HOLES..
3. WALL STUD PER PLAN.

NOTE:
LATERAL BRACING SHALL OCCUR AT MID-HEIGHT OF WALL. MIDHEIGHT IS DEFINED AS THE DISTANCE BETWEEN THE SILL TRACK AND THE LEDGER ANGLE OR END OF STUD. WHICHEVER IS LESS.

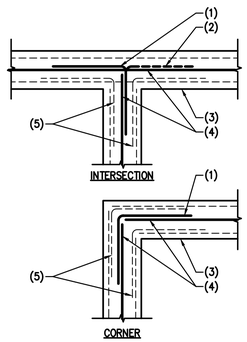
20 *CLARK DETRICH FASTBRIDGE LATERAL BRACING*
NO SCALE



NOTES:
1. CONCRETE FOOTING.
2. SLEEVE – PROVIDE 1/2" MINIMUM CLEARANCE AROUND PIPE OR CONDUIT.
3. PIPE OR CONDUIT.
4. CONCRETE FILL TO BE PLACED BEFORE FOOTING IS POURED – FORM SAME AS FOOTING AND POUR FULL WIDTH OF PIPE TRENCH.
5. STEM WALL.
6. 1'-6" MAXIMUM – WHERE TRENCH EXCEEDS 1'-6", NOTIFY STRUCTURAL ENGINEER PRIOR TO PLACEMENT OF FOOTING. BACKFILL AND RECOMPACT TRENCH PER SOILS REPORT AND SPECIFICATIONS.
7. BOTTOM OF TRENCH.

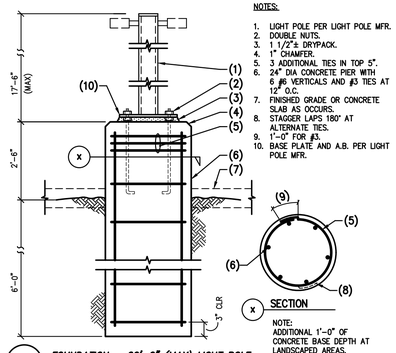
NOTE:
NO PIPE SHALL PASS THRU FOOTINGS OR UNDER COLUMN FOOTINGS.

21 *PIPE PASSING UNDER WALL FOOTING*
NO SCALE



NOTES:
1. CORNER BARS SAME SIZE AND SPACING AS HORIZONTAL REINFORCING. LAP PER G.S.N. (24" MINIMUM).
2. ALTERNATE BEND.
3. CONCRETE STEM WALL OR FOOTING.
4. REINFORCING PER PLANS AND/OR DETAILS.
5. CORNER BARS AT MULTIPLE REINFORCING.

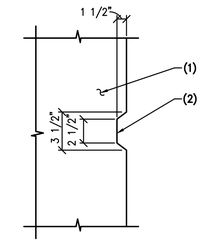
22 *PLAN – CORNER REINFORCING IN CONCRETE FOOTING, STEM OR WALL*
NO SCALE



NOTES:
1. LIGHT POLE PER LIGHT POLE MFR.
2. DOUBLE NUTS.
3. 1 1/2"± DRYPACK.
4. 1" CHAMFER.
5. 3 ADDITIONAL TIES IN TOP 5".
6. 24" DIA CONCRETE PIER WITH 6 #6 VERTICALS AND #3 TIES AT 12" O.C.
7. FINISHED GRADE OR CONCRETE SLAB AS OCCURS.
8. STAGGER LAPS 180° AT ALTERNATE TIES.
9. 1'-0" FOR #3.
10. BASE PLATE AND A.B. PER LIGHT POLE MFR.

NOTE:
ADDITIONAL 1'-0" OF CONCRETE BASE DEPTH AT LANDSCAPED AREAS.

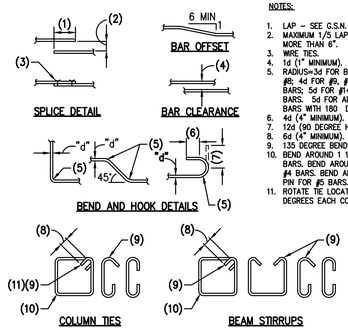
23 *FOUNDATION – 20'-0" (MAX) LIGHT POLE*
NO SCALE



NOTES:
1. CONCRETE.
2. KEYED JOINT – REMOVE FORM MATERIAL PRIOR TO PLACING ADJACENT CONCRETE.

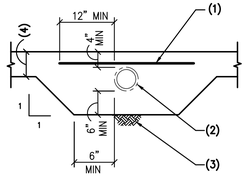
NOTE:
ALL DIMENSIONS ARE ± 1/2".

24 *TYPICAL KEY IN CONCRETE*
NO SCALE



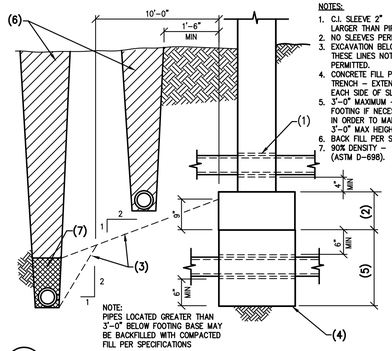
NOTES:
1. LAP – SEE G.S.N.
2. MAXIMUM 1/3 LAP BUT NOT MORE THAN 6".
3. WIRE TIES.
4. 1d (1" MINIMUM).
5. RADIUS=3d FOR BARS NOT OVER #8; 4d FOR #9, #10 AND #11 BARS; 5d FOR #14 AND #18 BARS. 5d FOR ALL GRADE 40 BARS WITH 180° DEGREE HOOK.
6. 4d (4" MINIMUM).
7. 12d (90 DEGREE HOOK).
8. 6d (4" MINIMUM).
9. 135 DEGREE BEND.
10. BEND AROUND 1 1/2" PIN FOR #3 BARS. BEND AROUND 2" PIN FOR #4 BARS. BEND AROUND 2 1/2" PIN FOR #5 BARS.
11. ROTATE TIE LOCATION 90 DEGREES EACH COURSE.

25 *TYPICAL CONCRETE REINFORCING BAR DETAILS*
NO SCALE



NOTES:
1. 4x4/W1.4xW1.4 W.W.F. OR #4 AT 12" O.C.
2. PIPE OR CONDUIT SLEEVE.
3. FIRM UNDISTURBED SOIL OR COMPACTED BASE.
4. TYPICAL SLAB THICKNESS.

26 *SLEEVE FOR PIPE AT SLAB*
NO SCALE

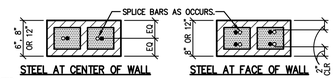


NOTE:
PIPES LOCATED GREATER THAN 3'-0" BELOW FOOTING BASE MAY BE BACKFILLED WITH COMPACTED FILL PER SPECIFICATIONS

NOTES:
1. C.I. SLEEVE 2" LARGER THAN PIPE.
2. NO SLEEVES PERMITTED.
3. EXCAVATION BELOW THESE LINES NOT PERMITTED.
4. CONCRETE FILL PIPE TRENCH – EXTEND 2'-0" EACH SIDE OF SLEEVE.
5. 3'-0" MAXIMUM – STEP FOOTING IF NECESSARY IN ORDER TO MAINTAIN 3'-0" MAX HEIGHT.
6. BACK FILL PER SPECS.
7. 90% DENSITY – (ASTM D-698).

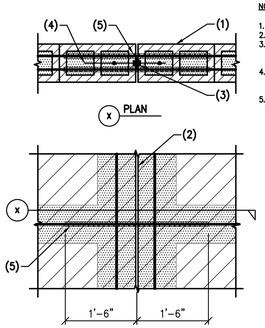
27 *TYPICAL PIPE THROUGH FOOTING AND TRENCH*
NO SCALE

REBAR SIZE (METRIC)	REBAR GRADE	MASONRY LAP SPLICE LENGTH				
		STEEL AT CENTER OF WALL			STEEL AT FACE OF WALL (& BOND BEAMS)	
		6" BLK	8" BLK	12" BLK	8" BLK	12" BLK
#4 (13)	40	20"	20"	20"	20"	20"
#4 (13)	60	20"	20"	20"	20"	20"
#5 (16)	60	25"	25"	25"	25"	25"
#6 (19)	60	N/A	30"	30"	30"	30"
#7 (22)	60	N/A	35"	35"	N/A	35"
#8 (25)	60	N/A	N/A	40"	N/A	40"



NOTES:
1. LAPS APPLY TO BOTH VERTICAL AND HORIZONTAL REINFORCING.
2. PROVIDE BENT BARS TO MATCH HORIZONTAL BOND BEAM REINFORCING, AT CORNERS AND WALL INTERSECTION TO MAINTAIN BOND BEAM CONTINUITY.
3. DO NOT SPLICE HORIZONTAL BARS WITHIN 8'-0" OF CONTROL JOINTS.
4. FOR LADDER TYPE HORIZONTAL REINFORCING, SEE G.S.N.
5. LAP LENGTHS ARE BASED ON A CALCULATED STEEL STRESS (fs) NOT EXCEEDING 80 PERCENT OF THE ALLOWABLE STEEL STRESS (Fs).

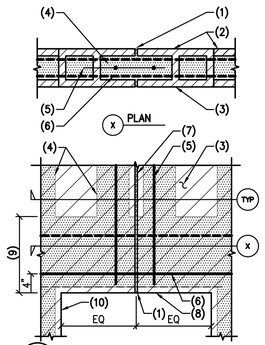
WORKING STRESS
MASONRY LAP SPLICES FOR REINFORCING STEEL
28
NO SCALE



NOTES:
1. MASONRY WALL.
2. CONTROL JOINT.
3. CONTROL JOINT MATERIAL PER ARCHITECTURAL DRAWINGS AND SPECIFICATIONS.
4. VERTICAL REINFORCING TO MATCH WALL REINFORCING EACH SIDE OF CONTROL JOINT.
5. CONTINUOUS BOND BEAM BARS – WRAP BARS WITH MASTIC FOR BOND BREAK.

NOTE:
BOND BEAM BARS SHALL NOT BE LAPPED WITHIN 8'-0" OF CONTROL JOINT.

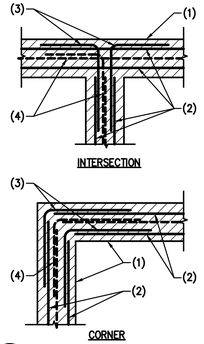
29 *CONTROL JOINT IN MASONRY WALL*
NO SCALE



NOTES:
1. RAKE JOINT BOTH SIDES FULL HEIGHT OF LINTEL.
2. OPEN END MASONRY UNITS. INSTALL AS SHOWN SYMMETRICAL ABOUT CONTROL JOINT FULL LENGTH OF LINTEL.
3. MASONRY WALL.
4. GROUT SOLID FULL HEIGHT OF WALL.
5. VERTICAL REINFORCING TO MATCH WALL REINFORCING EACH SIDE OF CONTROL JOINT.
6. HORIZONTAL LINTEL REINFORCING PER SCHEDULE CONTINUOUS THRU CONTROL JOINT.
7. JOINT MATERIAL PER TYPICAL CONTROL JOINT IN MASONRY WALL DETAIL ABOVE LINTEL.
8. BOTTOM OF LINTEL.
9. HEIGHT OF LINTEL PER PLAN.
10. OPENING JAMB.

NOTE:
A. LOCATE JOINT AT MIDSPAN OF MASONRY LINTEL. BOND BEAM AND LINTEL REINFORCING SHALL NOT BE LAPPED WITHIN 8'-0" OF CONTROL JOINT. DO NOT WRAP WITH MASTIC.
B. FOR ADDITIONAL INFORMATION, SEE LINTEL SCHEDULE.

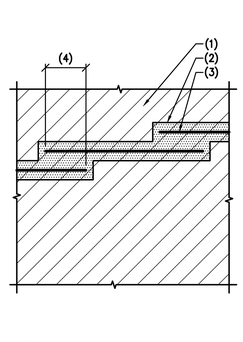
30 *CONTROL JOINT IN MASONRY LINTEL*
NO SCALE



NOTES:
1. MASONRY WALL.
2. BOND BEAM REINFORCING.
3. CORNER BARS SAME SIZE AND SPACING AS HORIZONTAL REINFORCING – LAP PER G.S.N. (24" MINIMUM).
4. SINGLE BAR REINFORCING WHERE OCCURS. ALTERNATE BEND OF CORNER BARS AT INTERSECTION.

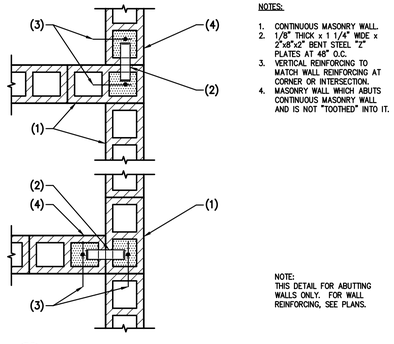
NOTE:
SEE TYPICAL DETAIL FOR NON-TOOTHED ABUTTING WALLS AS OCCURS.

31 *MASONRY BOND BEAM AT INTERSECTING WALLS*
NO SCALE



NOTES:
1. MASONRY WALL.
2. SOLID GROUTED BOND BEAM.
3. BOND BEAM REINFORCING.
4. LAP REINFORCING PER G.S.N. (24" MINIMUM).

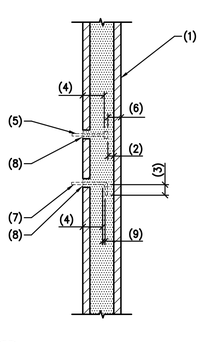
32 *STEPPED MASONRY WALL BOND BEAM*
NO SCALE



NOTES:
1. CONTINUOUS MASONRY WALL.
2. 1/8" THICK x 1 1/4" WIDE x 2'-x8"x2" BENT STEEL "Z" PLATES AT 48" O.C.
3. VERTICAL REINFORCING TO MATCH WALL REINFORCING AT CORNER OR INTERSECTION.
4. MASONRY WALL WHICH ABUTS CONTINUOUS MASONRY WALL AND IS NOT "TOOTHED" INTO IT.

NOTE:
THIS DETAIL FOR ABUTTING WALLS ONLY. FOR WALL REINFORCING, SEE PLANS.

33 *PLAN – TYPICAL CONNECTION FOR NON-TOOTHED ABUTTING MASONRY WALLS*
NO SCALE



NOTES:
1. MASONRY WALL.
2. 1/2" MIN.
3. 1 1/2 BOLT DIAMETER EXTENSION.
4. EMBEDMENT PER TYPICAL DETAIL OR PER PLAN.
5. HEADED STUD.
6. 2" MIN.
7. ANCHOR BOLT.
8. BREAK OPEN FACE SHELL TO PROVIDE 1/2" MIN GROUT COVER AROUND ANCHOR.
9. 1 BOLT DIAMETER.

34 *TYPICAL ANCHOR EMBEDMENT REQUIREMENTS IN MASONRY WALL*
NO SCALE

Jaramillo-Tonneson & Associates
consulting structural engineers
JTA Engineering, LLC
15825 S 46th St. Suite 129
Phoenix, AZ. 85048-0045
https://jtaengineering.com
480.442.2179 Sergio Jaramillo
602.492.6426 Joe Tonneson

PROJECT NUMBER: 2022152	PROJECT MANAGER: SJ/jS

drawings that are not signed, sealed & dated by the engineer of record are considered preliminary and are not for construction. any requested changes after bid documents are issued will be considered a change order and will be billed hourly to the requesting party.

STAMP
COLORADO LICENSED
JOSEPH S. TONNESON
0052313
PROFESSIONAL ENGINEER
01/19/2023

JESSE GOLDMAN, ARCHITECT
2698 S COLORADO BLVD, SUITE 525
DENVER, CO 80222
(303) 962-9164

THESE DRAWINGS AND SPECIFICATIONS, AS INSTRUMENTS OF SERVICE, ARE AND SHALL REMAIN THE PROPERTY OF JESSE GOLDMAN, ARCHITECT. THE PROJECT FOR WHICH THEY ARE MADE IS EXECUTED NOT TO BE USED BY ANY PERSON OR ENTITY ON OTHER PROJECTS EXCEPT BY AGREEMENT WITH THE ARCHITECT. COPYRIGHT © 2022

QUICK N CLEAN CAR WASH

PARKER RD. & PINE LANE AVE.

PARKER, CO

2696 S COLORADO BLVD, SUITE 525
DENVER, CO 80222
(303) 962-9164
www.cshqa.com

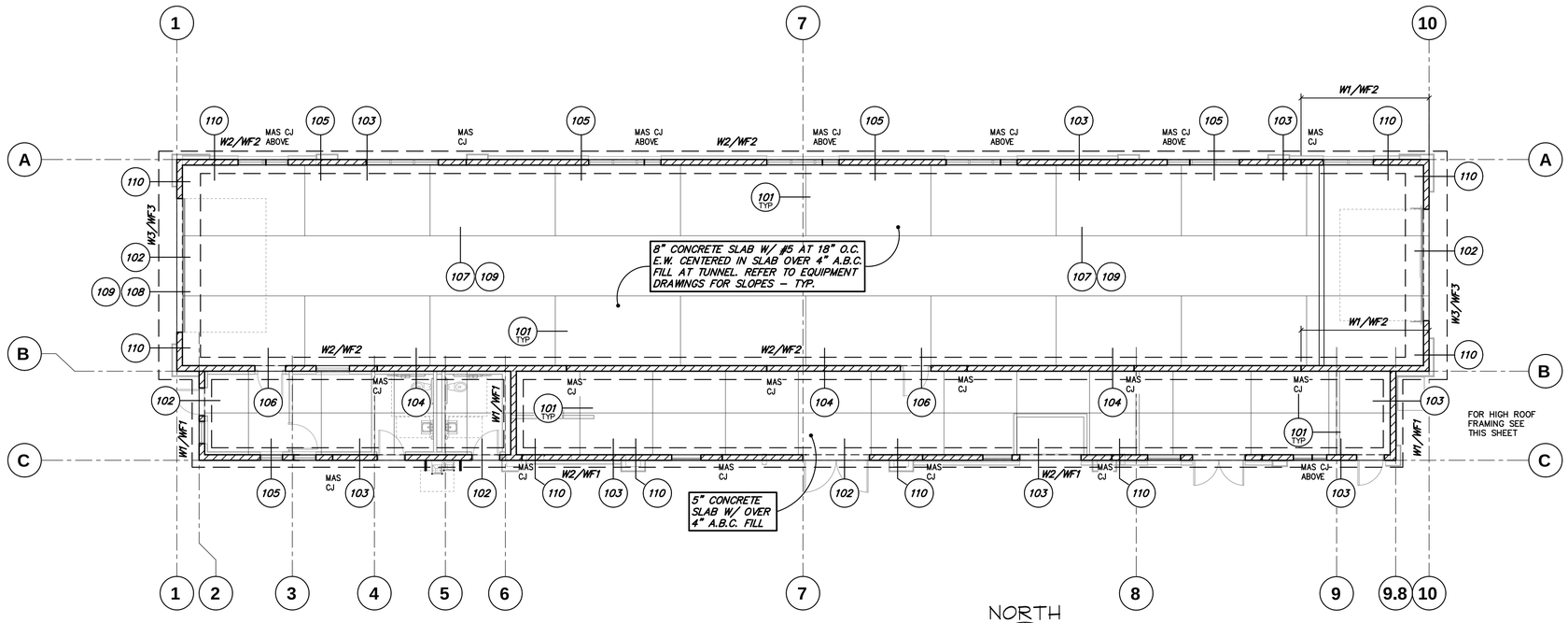
CSHQA

PROJECT	DATE
20037.000	10-10-2022
DRAWN	CHECKED
JS	SJJ

REVISED

SHEET TITLE
TYPICAL DETAILS

SHEET
S0.3



FOUNDATION PLAN

SCALE: 1/8"=1'-0"

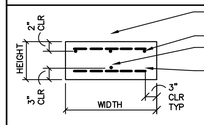
NORTH

NOTE:
GENERAL CONTRACTOR TO COORDINATE ELEVATIONS, DIMENSIONS, LAYOUT, ETC. WITH EQUIPMENT DRAWINGS PRIOR TO ANY FOUNDATION CONSTRUCTION.

FOUNDATION NOTES – TYP U.N.O.:

1. VERIFY ALL DIMENSIONS WITH ARCHITECTURAL DRAWINGS AND FIELD CONDITIONS. BUILDING DIMENSIONS, WHERE SHOWN, WERE PROVIDED BY THE ARCHITECT AND SHALL BE VERIFIED WITH SAME PRIOR TO PROCEEDING WITH THE WORK. DO NOT USE CONC C.J. FOR LOCATING BUILDING ELEMENTS.
2. SCHEDULED MARK DESIGNATIONS ARE TYPICAL TO THE PROJECT AND MAY NOT NECESSARILY BE FOUND ON THIS PLAN.
3. DEPTH OF FOOTING DIMENSIONS INDICATED IN THE G.S.N. ARE MINIMUMS. FOUNDATION CONTRACTOR SHALL COORDINATE WITH SOILS REPORT AND OTHER TRADES TO INSURE THAT THESE MINIMUMS ARE SUFFICIENT FOR THE WORK. SEE TYPICAL DETAILS FOR ADDITIONAL REQUIREMENTS.
4. ▨ – AS SHOWN ON PLAN INDICATES 8" MASONRY WALL, SEE G.S.N., TYPICAL DETAILS, PLANS AND DETAILS FOR ADDITIONAL INFORMATION. ALL REINFORCING SHOWN AND/OR NOTED SHALL BE FULL HEIGHT OF WALL – TYP U.N.O.
5. ⊢——⊣ – AS SHOWN ON PLAN INDICATES ARCHITECTURAL LIGHT GAGE WALLS.
6. WF1, WF2, ETC – AS SHOWN ON PLAN INDICATES CONT. WALL FOOTING, SEE SCHEDULE THIS SHEET.
7. W1, W2, ETC – AS SHOWN ON PLAN INDICATES MASONRY WALL REINFORCING, SEE SCHEDULE THIS SHEET.
8. UNLESS NOTED OTHERWISE ON PLANS AND/OR DETAILS, DEPTH OF FOOTING DIMENSIONS INDICATED IN THE G.S.N. ARE MINIMUMS. FOUNDATION CONTRACTOR SHALL COORDINATE WITH SOIL REPORT AND ALL TRADES TO INSURE THAT THESE MINIMUMS ARE SUFFICIENT FOR THE WORK. SEE TYPICAL DETAILS FOR ADDITIONAL REQUIREMENTS.
9. BUILDING CONCRETE SLAB ON GRADE SHALL BE AS NOTED ON PLAN. VERIFY EXACT SIZE AND LOCATION OF DEPRESSED AND/OR RAISED SLABS WITH ARCH'L DRAWINGS. FOR SIDEWALK LOCATION, SEE ARCH'L DRAWINGS. FOR ADDITIONAL INFORMATION, SEE G.S.N. AND TYPICAL DETAILS.
10. CONC C.J. – AS SHOWN ON PLAN INDICATES LOCATION OF EITHER KEYED OR SAWCUT CONTROL JOINT IN CONCRETE SLAB ON GRADE AT CONTRACTOR'S OPTION, SEE G.S.N. AND TYPICAL DETAILS.
11. VERIFY EXACT SIZE AND LOCATION OF DEPRESSED AND/OR RAISED SLABS WITH ARCHITECTURAL DRAWINGS.
12. FOR SIDEWALK LOCATION, SEE ARCHITECTURAL DRAWINGS.
13. MAS C.J. – AS SHOWN ON PLAN INDICATES MASONRY CONTROL JOINT IN MASONRY WALL AND/OR LINTEL, SEE G.S.N. AND TYPICAL DETAILS. JOINTS ARE FULL HEIGHT OF STRUCTURE U.N.O.

CONTINUOUS FOOTING (WF) SCHEDULE



NOTE:
1. FOR DEPTH OF FOOTING, SEE G.S.N. U.N.O.
2. CENTER FOOTING ON CONSTRUCTION ABOVE U.N.O.
3. EXTEND FOOTINGS 12" BEYOND JAMBS U.N.O.

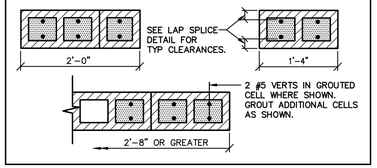
MARK	DIMENSIONS		FOOTING REINFORCING		REMARKS
	HEIGHT	WIDTH	LONGITUDINAL	TRANSVERSE	
WF1	14"	2'–0"	(3)–#5 CONT.	#5 AT 18" O.C.	---
WF2	14"	2'–8"	(4)–#5 CONT.	#5 AT 18" O.C.	---
WF3	24"	5'–0"	(6)–#5 CONT. TOP & BOTTOM	#5 AT 12" O.C. TOP & BOTTOM	---

MASONRY WALL REINFORCING (W) SCHEDULE

NOTE:
1. ALL REINFORCING SHOWN ON PLAN AND AS NOTED BELOW SHALL BE FULL HEIGHT OF WALL U.N.O.
2. FOR LAP SPLICES, SEE TYPICAL DETAIL.
3. HORIZONTAL REINFORCING PER G.S.N. U.N.O.
4. REFER TO TYPICAL DETAIL 28 FOR ADDITIONAL INFORMATION.

MARK	VERTICAL REINFORCING	REMARKS
W1	#5 AT 16" O.C.	– – –
W2	#5 AT 32" O.C.	– – –
W3	#6 AT 8" O.C. EACH FACE	– – –

TYPICAL JAMB REINFORCING – U.N.O.



Jaramillo-Tonneson & Associates
consulting structural engineers
JTA Engineering, LLC
15825 S 46th St. Suite 129
Phoenix, AZ. 85048-0045
https://jtaengineering.com
480.442.2179 Sergio Jaramillo
602.492.6426 Joe Tonneson

PROJECT NUMBER: 2022152 | PROJECT MANAGER: SJ/JS

drawings that are not signed, sealed & dated by the engineer of record are considered preliminary and are not for construction. any requested changes after bid documents are issued will be considered a change order and will be billed hourly to the requesting party.

STAMP

COLORADO LICENSED
JOSEPH S. TONNESON
0052313
PROFESSIONAL ENGINEER
01/19/2023

JESSE GOLDMAN, ARCHITECT
2696 S COLORADO BLVD, SUITE 525
DENVER, CO 80222
(303) 962-9164

THESE DRAWINGS AND SPECIFICATIONS, AS INSTRUMENTS OF SERVICE, ARE AND SHALL REMAIN THE PROPERTY OF CSHQA. THESE DOCUMENTS ARE TO BE USED ONLY FOR THE PROJECT FOR WHICH THEY ARE MADE AND ARE NOT TO BE USED IN WHOLE OR IN PART FOR ANY OTHER PROJECT WITHOUT THE WRITTEN AUTHORIZATION OF CSHQA. ALL COMMON LAW, STATUTORY AND OTHER RESERVED RIGHTS, INCLUDING COPYRIGHT, ARE RETAINED BY CSHQA OR ITS AFFILIATES. Copyright © 2022

QUICK N CLEAN CAR WASH

PARKER RD. & PINE LANE AVE.

PARKER, CO

2696 S COLORADO BLVD, SUITE 525
DENVER, CO 80222
(303) 962-9164
www.cshqa.com

CSHQA

PROJECT	DATE
20037.000	10–10–2022
DRAWN	CHECKED
JS	SJ

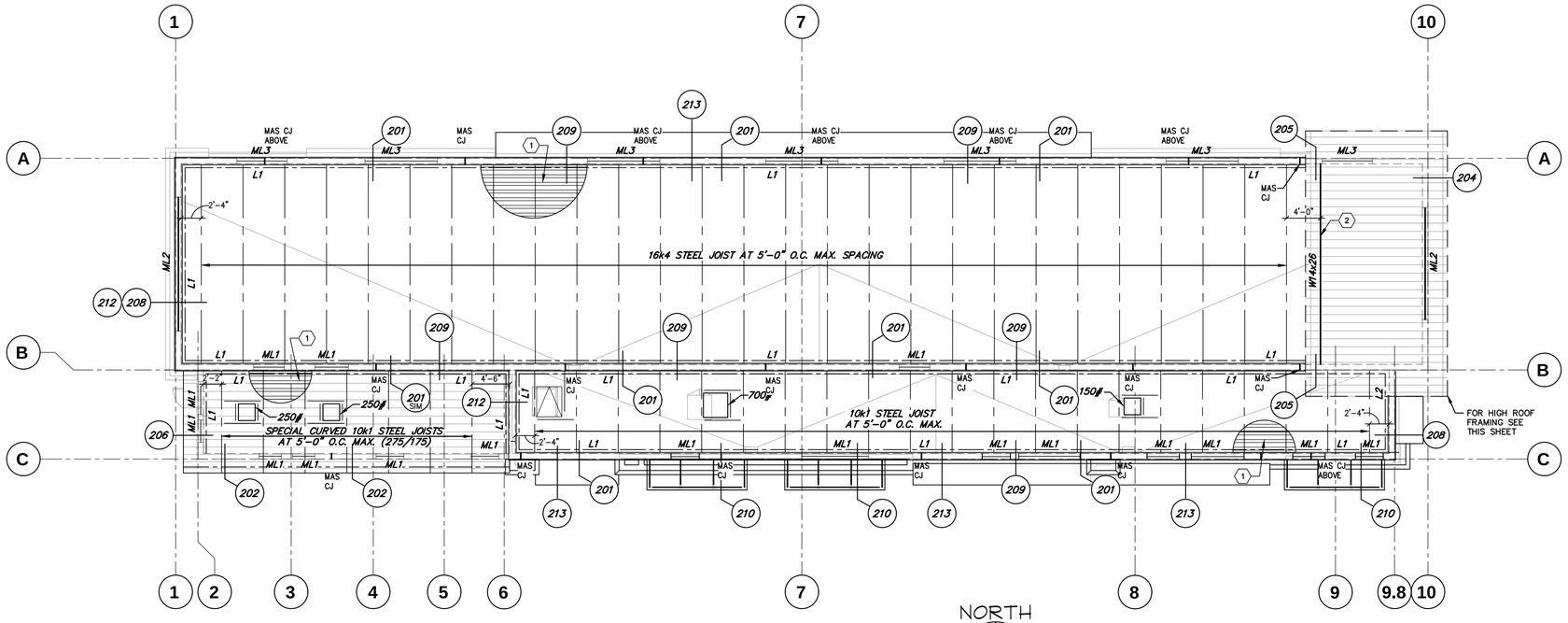
REVISED

SHEET TITLE

FND PLAN

SHEET

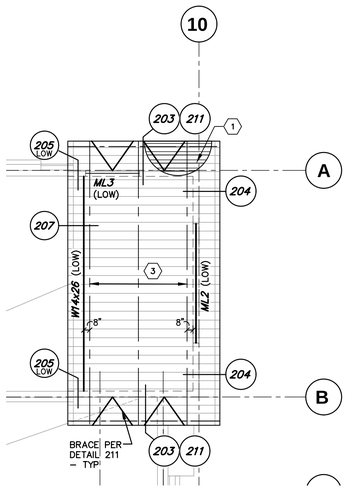
S1.1



ROOF FRAMING PLAN

SCALE: 1/8"=1'-0"

NORTH



HIGH ROOF FRAMING PLAN

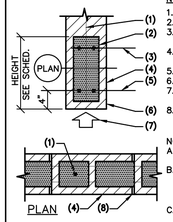
SCALE: 1/8"=1'-0"

NORTH

ROOF FRAMING NOTES – TYP U.N.O.:

1. VERIFY ALL DIMENSIONS WITH ARCHITECTURAL DRAWINGS AND FIELD CONDITIONS. BUILDING DIMENSIONS, WHERE SHOWN, WERE PROVIDED BY THE ARCHITECT AND SHALL BE VERIFIED WITH SAME PRIOR TO PROCEEDING WITH THE WORK.
2. SCHEDULED MARK DESIGNATIONS ARE TYPICAL TO THE PROJECT AND MAY NOT NECESSARILY BE FOUND ON THIS PLAN.
3. ▨▨▨▨▨▨ – AS SHOWN ON PLAN INDICATES 8" MASONRY WALL. SEE G.S.N., TYPICAL DETAILS, PLANS AND DETAILS FOR ADDITIONAL INFORMATION. ALL REINFORCING SHOWN AND/OR NOTED SHALL BE FULL HEIGHT OF WALL – TYP U.N.O.
4. ML1, ML2, ETC – AS SHOWN ON PLAN INDICATES MASONRY LINTEL, SEE SCHEDULE THIS SHEET, G.S.N. AND TYPICAL DETAILS.
5. FOR MISCELLANEOUS LINTELS NOT SHOWN, SEE G.S.N. AND TYPICAL DETAILS. MASONRY CONTRACTOR SHALL COORDINATE WITH OTHER TRADES FOR EXACT SIZE AND LOCATION REQUIREMENTS.
6. L1, L2, ETC – AS SHOWN ON PLAN INDICATES STEEL LEDGER, SEE SCHEDULE THIS SHEET, G.S.N. AND TYPICAL DETAILS.
7. MAS C.J. – AS SHOWN ON PLAN INDICATES MASONRY CONTROL JOINT IN MASONRY WALL AND/OR LINTEL, SEE G.S.N. AND TYPICAL DETAILS. JOINTS MAY BE SHOWN, BUT NOT NOTED ON THIS PLAN. SEE FOUNDATION PLAN FOR NOTED LOCATIONS.
8. FOR CLARITY, DETAILS MAY SHOW ONLY ONE SIDE OF FRAMING CONDITION.
9. VERIFY EXACT SIZE, WEIGHT AND LOCATION OF EQUIPMENT AND SUPPORTS INDICATED ON PLAN WITH ARCHITECTURAL, MECHANICAL, PLUMBING, ELECTRICAL, SPRINKLER AND THEIR RELATED DRAWINGS. EQUIPMENT INDICATED ARE ONLY THOSE THAT EXCEED LOADS SPECIFIED IN THE G.S.N. FOR SUPPORT OF EQUIPMENT, SEE TYPICAL DETAILS AND OTHER TRADES.
10. FOR CLARITY, ALL ROOF OPENINGS MAY NOT BE SHOWN ON ROOF FRAMING PLAN. FOR EXACT SIZE, NUMBER AND LOCATION OF OPENINGS, SEE ARCHITECTURAL, MECHANICAL, PLUMBING AND ELECTRICAL DRAWINGS. FOR FRAMING AT OPENINGS, SEE TYPICAL DETAILS.

MASONRY LINTEL (ML) SCHEDULE



NOTES:
1. VERTICAL WALL REINFORCING.
2. TOP OF SOLID GROUT.
3. TOP REINFORCING WHERE INDICATED IN LINTEL SCHEDULE.
4. OPEN END BLOCKS – BLOCKS OPEN ONE SIDE.
5. REINFORCING – SEE SCHEDULE.
6. LINTEL "U" BLOCK.
7. SHORE LINTEL UNTIL GROUT REACHES DESIGN STRENGTH.
8. FULL MORTAR JOINTS ON VERTICAL AND HORIZONTAL FACE SHELLS.

NOTE:
A. VERTICAL REINFORCING TO MATCH AND LAP WALL REINFORCING PER G.S.N.
B. EXTEND GROUT, OPEN END MASONRY UNITS AND REINFORCING 24" PAST EACH JAMB. INSTALL CORNER BARS WHERE 24" CANNOT BE ACHIEVED.
C. DO NOT LAP SPLICE REINFORCING IN SINGLE SPAN LINTELS. WHERE SPLICES ARE REQUIRED IN MULTIPLE SPANS, LAP BOTTOM REINFORCING AT SUPPORTS AND TOP REINFORCING AT MIDSPAN.
D. FOR CONTROL JOINTS IN MASONRY LINTELS, SEE DETAILS 29 AND 30.

SEE G.S.N. FOR ADDITIONAL INFORMATION.

MARK	HEIGHT	REINFORCING	REMARKS
ML1	16"	(2)–#5 BOTTOM	---
ML2	40"	(2)–#5 TOP AND (2)–#6 BOTTOM	---
ML3	24"	(2)–#5 BOTTOM	---

STEEL LEDGER (L) SCHEDULE

LEDGER NOTES:
1. ALL LEDGERS SHALL HAVE MINIMUM OF 2 ANCHOR BOLTS PER LEDGER.
2. ANCHOR BOLTS SHALL BE LOCATED NOT LESS THAN 6" NOR MORE THAN 12" FROM END OF LEDGER OR AT LEDGER SPLICE.
3. FOR ADDITIONAL INFORMATION, SEE PLAN AND TYPICAL DETAILS, AND GENERAL STRUCTURAL NOTES.

MARK	SIZE	CONNECTION
L1	4"x4"x1/4"	WELD PLATES PER DETAIL 208 AND 209

ROOF KEY NOTES

1. 1 1/2"x20 GA STEEL DECK ATTACHED PER G.S.N. – TYP.
2. C.L. OF WALL = C.L. OF STEEL BEAM.
3. SPECIAL CURVED STEEL JOISTS AT 5'-0" O.C. MAX. (275/175)

Jaramillo-Tonneson & Associates
consulting structural engineers
JTA Engineering, LLC
15825 S 46th St. Suite 129
Phoenix, AZ. 85048-0045
https://jtaengineering.com
480.442.2179 Sergio Jaramillo
602.492.6426 Joe Tonneson

PROJECT NUMBER: 2022152	PROJECT MANAGER: SJ/JS

drawings that are not signed, sealed & dated by the engineer of record are considered preliminary and are not for construction. any requested changes after bid documents are issued will be considered a change order and will be billed hourly to the requesting party.

STAMP

COLORADO LICENSED
JOSEPH S. TONNESON
0052313
PROFESSIONAL ENGINEER
01/19/2023

JESSE GOLDMAN, ARCHITECT
2696 S COLORADO BLVD, SUITE 525
DENVER, CO 80222
(303) 962-9164

THESE DRAWINGS AND SPECIFICATIONS, AS INSTRUMENTS OF SERVICE, ARE AND SHALL REMAIN THE PROPERTY OF CSHQA. THE DRAWINGS AND SPECIFICATIONS FOR THE PROJECT FOR WHICH THEY ARE MADE IS EXECUTED THEY ARE NOT TO BE USED BY ANY PERSON OR ENTITY ON OTHER PROJECTS OR EXTENSIONS TO THIS PROJECT EXCEPT BY AGREEMENT IN WRITING AND WITH APPROPRIATE COMPENSATION TO CSHQA. COPYRIGHT © 2022 CSHQA ARCHITECTS, LLC AND/OR ITS ARCHITECT AFFILIATES.

QUICK N CLEAN CAR WASH

PARKER RD. & PINE LANE AVE.

PARKER, CO

2696 S COLORADO BLVD, SUITE 525
DENVER, CO 80222
(303) 962-9164
www.cshqa.com

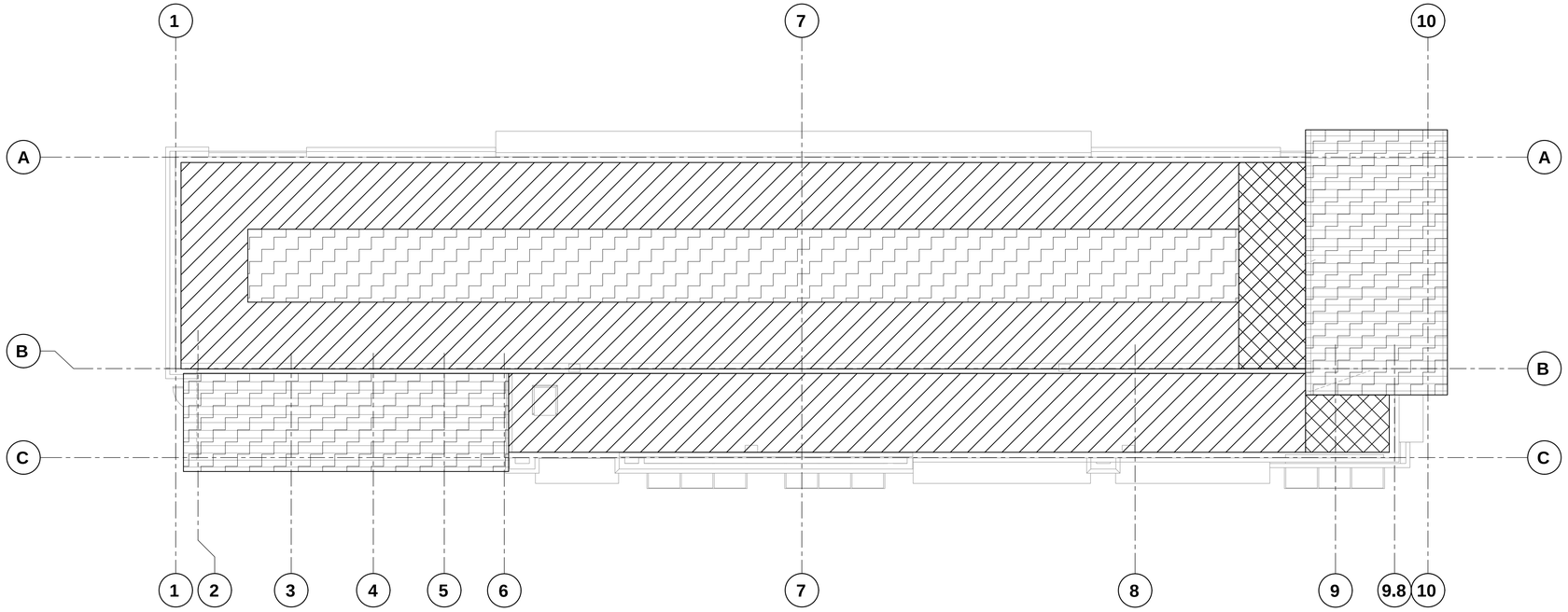
CSHQA

PROJECT	DATE
20037.000	10-10-2022
DRAWN: JS	CHECKED: SJJ

REVISED

SHEET TITLE: **RF FRAM PLAN**

SHEET: **S2.1**



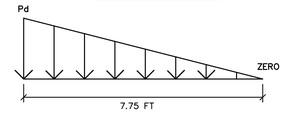
SNOW LOAD ROOF DIAGRAM PLAN

SCALE: 1/8"=1'-0"

NORTH

SNOW LOAD SCHEDULE		
HATCH	LIVE LOAD	REMARKS
	Pf = 31.5 PSF	Pf = UNIFORM SNOW LOAD
	Pd = 28 PSF	Pd = SNOW DRIFT, IN ADDITION TO Pf
	Pd = 38 PSF	Pd = SNOW DRIFT, IN ADDITION TO Pf

SNOW DRIFT DIAGRAM



STAMP

COLORADO LICENSED
JOSEPH S. TONNESON
0052313
PROFESSIONAL ENGINEER
01/19/2023

JESSE GOLDMAN, ARCHITECT
2696 S COLORADO BLVD, SUITE 525
DENVER, CO 80222
(303) 962-9164

THESE DRAWINGS AND SPECIFICATIONS, AS INSTRUMENTS OF SERVICE, ARE AND SHALL REMAIN THE PROPERTY OF CSHQA. THESE DRAWINGS AND SPECIFICATIONS FOR THE PROJECT FOR WHICH THEY ARE MADE IS EXECUTED. THEY ARE NOT TO BE USED IN WHOLE OR IN PART FOR ANY OTHER PROJECT WITHOUT THE WRITTEN AUTHORIZATION OF CSHQA. THEY ARE NOT TO BE USED BY ANY PERSON OR ENTITY ON OTHER PROJECTS OR EXTENSIONS TO THIS PROJECT EXCEPT BY AGREEMENT IN WRITING AND WITH APPROPRIATE COMPENSATION TO CSHQA. THE ARCHITECT GRANTS THE OWNER A LICENSE TO USE THE DRAWINGS FOR THE PURPOSE OF COMPLETION OF THIS PROJECT WHEN PHASED WITHOUT PERFECTION OF FORM OR CONTENT BY THE ARCHITECT OR HIS AFFILIATES. Copyright © 2022

QUICK N CLEAN CAR WASH

PARKER RD. & PINE LANE AVE.

PARKER, CO

2696 S COLORADO BLVD, SUITE 525
DENVER, CO 80222
(303) 962-9164
www.cshqa.com

CSHQA

PROJECT	DATE
20037.000	10-10-2022
DRAWN	CHECKED
JS	SJJ

REVISED

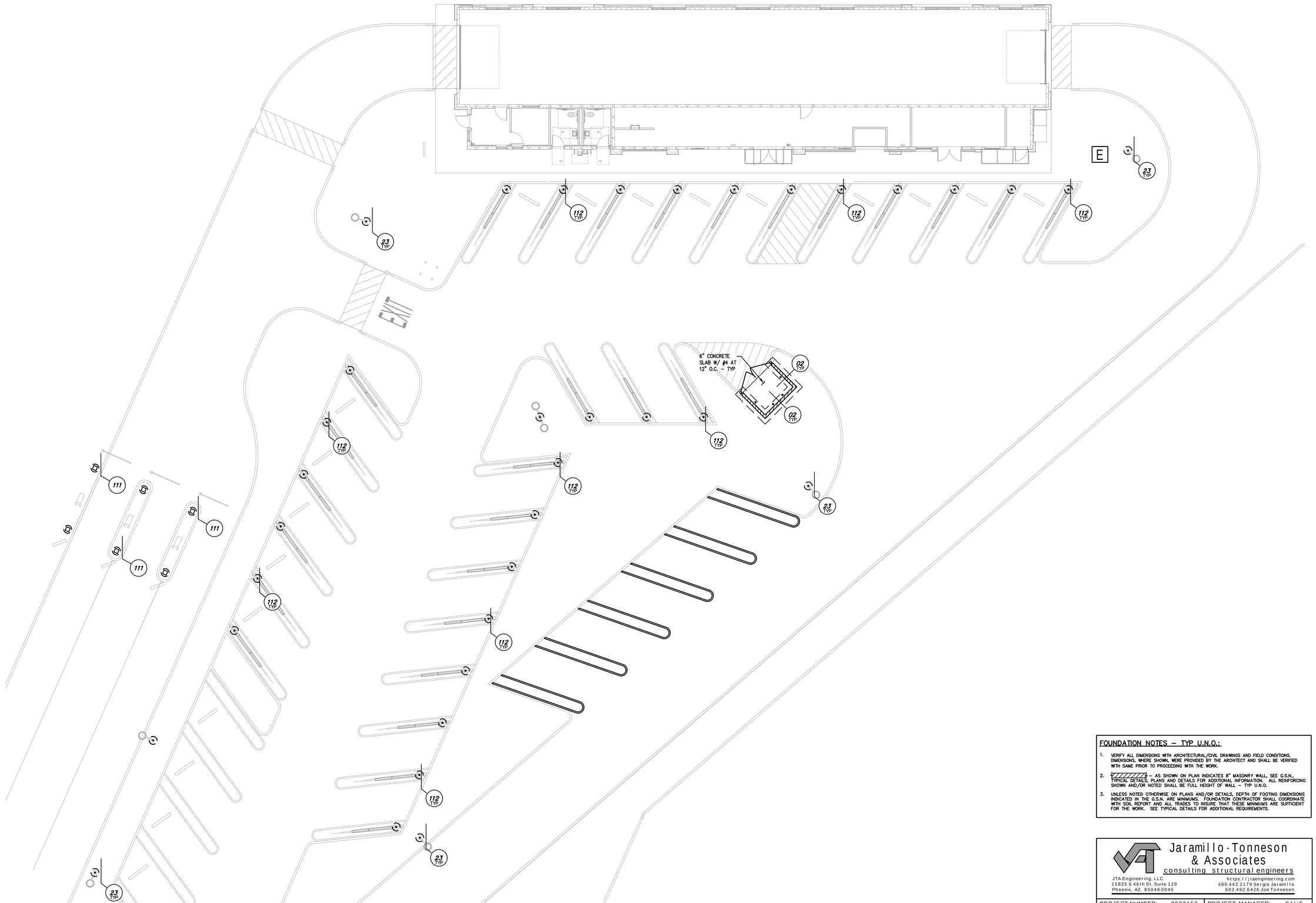
SHEET TITLE
SNOW L. RF DIAGRAM PLAN

SHEET
S2.2

Jaramillo-Tonneson & Associates
consulting structural engineers
JTA Engineering, LLC
15825 S 46th St. Suite 129
Phoenix, AZ. 85048-0045
https://jtaengineering.com
480.442.2179 Sergio Jaramillo
602.492.6426 Joe Tonneson

PROJECT NUMBER: 2022152	PROJECT MANAGER: SJ/jS

drawings that are not signed, sealed & dated by the engineer of record are considered preliminary and are not for construction. any requested changes after bid documents are issued will be considered a change order and will be billed hourly to the requesting party.



CONCRETE PIER LAYOUT AT VACUUM AND PAY CANOPIES

SCALE: 3/32"=1'-0"

FOUNDATION NOTES – TYP U.N.O.:

1. VERIFY ALL DIMENSIONS WITH ARCHITECTURAL/CIVIL DRAWINGS AND FIELD CONDITIONS. DIMENSIONS, WHERE SHOWN, WERE PROVIDED BY THE ARCHITECT AND SHALL BE VERIFIED WITH SAME PRIOR TO PROCEEDING WITH THE WORK.
2. ▨ – AS SHOWN ON PLAN INDICATES 8" MASONRY WALL, SEE G.S.N., TYPICAL DETAILS, PLANS AND DETAILS FOR ADDITIONAL INFORMATION. ALL REINFORCING SHOWN AND/OR NOTED SHALL BE FULL HEIGHT OF WALL – TYP U.N.O.
3. UNLESS NOTED OTHERWISE ON PLANS AND/OR DETAILS, DEPTH OF FOOTING DIMENSIONS INDICATED IN THE G.S.N. ARE MINIMUMS. FOUNDATION CONTRACTOR SHALL COORDINATE WITH SOIL REPORT AND ALL TRADES TO INSURE THAT THESE MINIMUMS ARE SUFFICIENT FOR THE WORK. SEE TYPICAL DETAILS FOR ADDITIONAL REQUIREMENTS.

Jaramillo-Tonneson & Associates
consulting structural engineers
JTA Engineering, LLC
15825 S 46th St. Suite 129
Phoenix, AZ. 85048-0045
https://jtaengineering.com
480.442.2179 Sergio Jaramillo
602.492.6426 Joe Tonneson

PROJECT NUMBER: 2022152	PROJECT MANAGER: SJ/JS

drawings that are not signed, sealed & dated by the engineer of record are considered preliminary and are not for construction. any requested changes after bid documents are issued will be considered a change order and will be billed hourly to the requesting party.

STAMP

COLORADO LICENSED
JOSEPH S. TONNESON
0052313
PROFESSIONAL ENGINEER
01/19/2023

JESSE GOLDMAN, ARCHITECT
2696 S COLORADO BLVD, SUITE 525
DENVER, CO 80222
(303) 962-9164

THESE DRAWINGS AND SPECIFICATIONS, AS INSTRUMENTS OF SERVICE, ARE AND SHALL REMAIN THE PROPERTY OF THE ARCHITECT WHETHER THE PROJECT FOR WHICH THEY ARE MADE IS EXECUTED OR NOT. THEY ARE NOT TO BE USED IN WHOLE OR IN PART, NOT TO BE USED BY ANY PERSON OR ENTITY ON OTHER PROJECTS, FOR ADDITIONS TO THIS PROJECT OR FOR COMPLETION OF THIS PROJECT WHEN PHASED WITHOUT THE WRITTEN CONSENT OF THE ARCHITECT OR HIS AFFILIATES. Copyright © 2022

QUICK N CLEAN CAR WASH

PARKER RD. & PINE LANE AVE.

PARKER, CO

2696 S COLORADO BLVD, SUITE 525
DENVER, CO 80222
(303) 962-9164
www.cshqa.com

CSHQA

PROJECT	DATE
20037.000	10-10-2022
DRAWN	CHECKED
PSS	JST

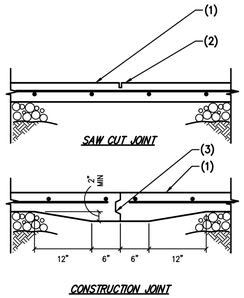
REVISED

SHEET TITLE

SITE PLAN

SHEET

S2.3

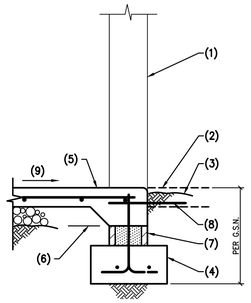


NOTES:

1. CONCRETE SLAB ON GRADE.
2. SAWCUT – 1/8" WIDE x 1/4 SLAB THICKNESS IN DEPTH – CUT SHALL BE MADE SOON ENOUGH TO PREVENT SHRINKAGE CRACKING, BUT NOT SO SOON AS TO CAUSE SPALLING OF THE CONCRETE WHILE SAWING. WORK MUST BE ACCOMPLISHED WITHIN 4 TO 12 HOURS OF CONCRETE FINISH.
3. CONTINUOUS KEY – SEE TYPICAL KEY IN CONCRETE SLAB ON GRADE.

NOTE:
KEYED JOINTS NEED ONLY OCCUR AT EXPOSED EDGES DURING PLACEMENT UNLESS SPECIFICALLY NOTED ON THE PLANS.

101 CONTROL JOINTS IN CONCRETE SLAB ON GRADE
NO SCALE

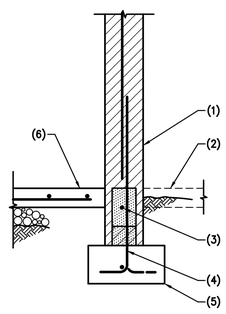


NOTES:

1. MASONRY WALL BEYOND.
2. STOREFRONT WHERE CUT. CONCRETE SLAB WHERE OCCURS.
3. FINISHED GRADE.
4. CONCRETE FOOTING.
5. CONCRETE SLAB ON GRADE, TOOLED EDGE AT OPENING.
6. DEPRESS STEM WALL 8" MIN.
7. MASONRY STEM WALL WITH REINFORCING FROM BEYOND. GROUT SOLID BELOW GRADE.
8. 5/8"#x16" SMOOTH DOWELS AT 16" O.C. TYP AT ALL OPENINGS.
9. SLOPE.

NOTE:
AT CONTRACTOR'S OPTION, USE CONCRETE STEM WALL W/ SAME REINFORCING.

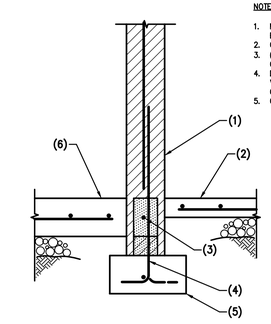
102 EXTERIOR MASONRY WALL FOOTING AT OPENING
NO SCALE



NOTES:

1. MASONRY WALL – GROUT SOLID BELOW GRADE.
2. FINISHED GRADE OR CONCRETE SLAB AS OCCURS.
3. 1 #5 CONTINUOUS IN 8" DEEP GROUTED BOND BEAM.
4. DOWELS TO MATCH AND LAP VERTICAL WALL REINFORCING PER G.S.N. – ALTERNATE BENDS.
5. CONCRETE FOOTING.
6. CONCRETE SLAB ON GRADE.

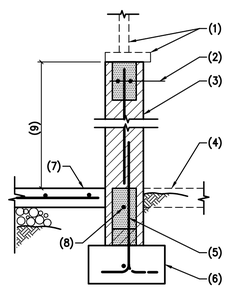
103 MASONRY WALL FOOTING
NO SCALE



NOTES:

1. MASONRY WALL – GROUT SOLID BELOW GRADE.
2. CONCRETE SLAB ON GRADE.
3. (1)–#5 CONTINUOUS IN 8" DEEP GROUTED BOND BEAM.
4. DOWELS TO MATCH AND LAP VERTICAL WALL REINFORCING PER G.S.N. – ALTERNATE BENDS.
5. CONCRETE FOOTING.

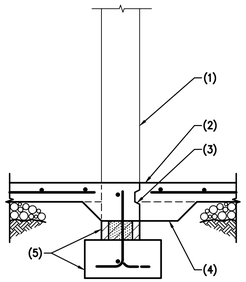
104 MASONRY WALL FOOTING
NO SCALE



NOTES:

1. WINDOW AND/OR SILL – SEE ARCH'L DRAWINGS.
2. BOND BEAM PER TYPICAL DETAIL OR G.S.N.
3. MASONRY WALL – GROUT SOLID BELOW GRADE.
4. FINISHED GRADE OR CONCRETE SLAB WHERE OCCURS.
5. DOWELS TO MATCH AND LAP VERTICAL WALL REINFORCING PER G.S.N. – ALTERNATE BENDS.
6. CONCRETE FOOTING.
7. CONCRETE SLAB ON GRADE.
8. (1)–#5 CONTINUOUS IN 8" DEEP GROUTED BOND BEAM.
9. 4'–0" MAX. – SEE ARCH'L DRAWINGS.

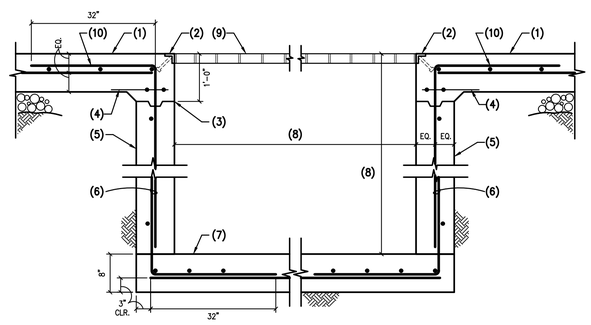
105 MASONRY WALL FOOTING AT WINDOW OPENING
NO SCALE



NOTES:

1. MASONRY WALL BEYOND.
2. CONCRETE SLAB ON GRADE.
3. CONTINUOUS KEY – SEE TYPICAL KEY IN CONCRETE DETAIL.
4. DEPRESS STEM WALL 8" MIN.
5. SOLID GROUTED MASONRY STEM WALL AND CONCRETE FOOTING WITH REINFORCING CONTINUOUS FROM BEYOND.

106 MASONRY WALL FOOTING AT OPENING
NO SCALE

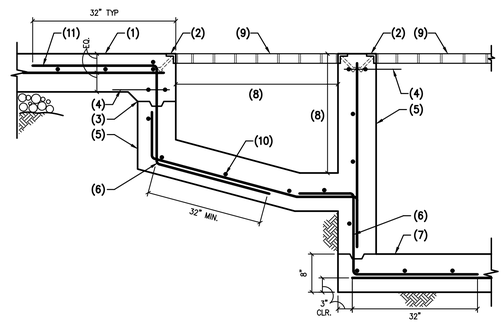


NOTES:

1. 8" CONCRETE SLAB.
2. CONT. 2 1/2"x2 1/2"x1/4" STEEL ANGLE W/ 5/8"ø H.S.x4" AT 16" O.C.
3. CONT. KEY JOINT.
4. (2)–#5 CONT.
5. 8" CONCRETE WALL W/ #5 AT 12" O.C. E.W.
6. #5 DOWELS AT 12" O.C.
7. 8" CONCRETE SLAB W/ #5 AT 12" O.C. E.W.
8. 4'–0" MAX. REFER TO EQUIPMENT MFR.
9. STEEL GRILL PER EQUIPMENT MFR.
10. #5 DOWELS 32"x32" AT 12 O.C.

NOTE:
FOR DIMENSIONS, LOCATION, AND ELEVATIONS. REFER TO ARCH'L AND EQUIPMENT MFR DWGS. PRIOR TO ANY CONSTRUCTION.

107 CONCRETE PIT
NO SCALE

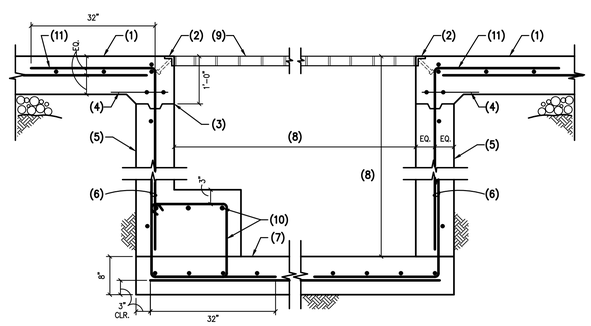


NOTES:

1. 8" CONCRETE SLAB.
2. CONT. 2 1/2"x2 1/2"x1/4" STEEL ANGLE W/ 5/8"ø H.S.x4" AT 16" O.C.
3. CONT. KEY JOINT.
4. (2)–#5 CONT.
5. 8" CONCRETE WALL W/ #5 AT 12" O.C. E.W.
6. #5 DOWELS AT 12" O.C.
7. 8" CONCRETE SLAB W/ #5 AT 12" O.C. E.W.
8. 4'–0" MAX. REFER TO EQUIPMENT MFR.
9. STEEL GRILL PER EQUIPMENT MFR.
10. #5 DOWELS AT 32"x24" AT 12 O.C.

NOTE:
FOR DIMENSIONS, LOCATION, AND ELEVATIONS. REFER TO ARCH'L AND EQUIPMENT MFR DWGS. PRIOR TO ANY CONSTRUCTION.

108 CONCRETE TRENCH
NO SCALE

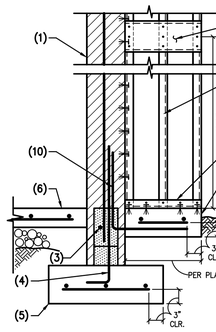


NOTES:

1. 8" CONCRETE SLAB.
2. CONT. 2 1/2"x2 1/2"x1/4" STEEL ANGLE W/ 5/8"ø H.S.x4" AT 16" O.C.
3. CONT. KEY JOINT.
4. (2)–#5 CONT.
5. 8" CONCRETE WALL W/ #5 AT 12" O.C. E.W.
6. #5 DOWELS AT 12" O.C.
7. 8" CONCRETE SLAB W/ #5 AT 12" O.C. E.W.
8. 5'–0" MAX. REFER TO EQUIPMENT MFR.
9. STEEL GRILL PER EQUIPMENT MFR.
10. (3)–#5 CONT. TOP & BOTTOM AND #4 TIES AT 12" O.C.
11. #5 DOWELS AT 32"x32" AT 12" O.C.

NOTE:
FOR DIMENSIONS, LOCATION, AND ELEVATIONS. REFER TO ARCH'L AND EQUIPMENT MFR DWGS. PRIOR TO ANY CONSTRUCTION.

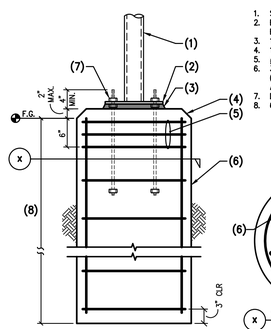
109 CONCRETE PIT
NO SCALE



NOTES:

1. MASONRY WALL – GROUT SOLID BELOW GRADE.
2. FINISHED GRADE OR CONCRETE SLAB AS OCCURS.
3. (1)–#5 CONTINUOUS IN 8" DEEP GROUTED BOND BEAM.
4. DOWELS TO MATCH AND LAP VERTICAL WALL REINFORCING PER G.S.N. – ALTERNATE BENDS.
5. CONCRETE FOOTING.
6. CONCRETE SLAB ON GRADE.
7. 3585125–43 STUDS AT EACH CORNER AND AT 12" O.C. FULL HEIGHT.
8. 3587125–43 TRACK W/ (2) SHOT PINS PER CORNER AND AT 6" O.C.
9. CONCRETE PAD W/ #4 AT 6" O.C. EACH WAY.
10. (3)–#5 DOWELS 16" AT EACH PAD (EQUALLY SPACED).
11. 35/8S125–43 BRACING AT 6'–0" O.C. FULL HEIGHT W/ (3)–#10 SCREWS PER STUD.

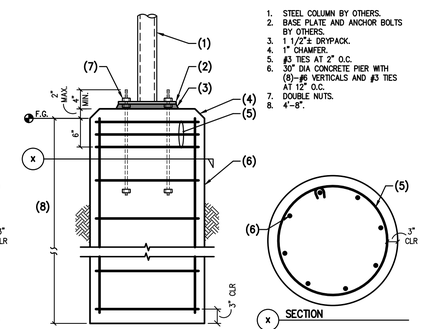
110 LIGHT GAGE POP OUT AT MASONRY WALL FOOTING
NO SCALE



NOTES:

1. STEEL COLUMN BY OTHERS.
2. BASE PLATE AND ANCHOR BOLTS BY OTHERS.
3. 1 1/2"± DRYPACK.
4. 1" CHAMFER.
5. #3 TIES AT 2" O.C.
6. 30" DIA CONCRETE PIER WITH (8)–#6 VERTICALS AND #3 TIES AT 12" O.C.
7. DOUBLE NUTS.
8. 6'–0".

111 PAY CANOPY – 12'–8" (MAX) POLE
NO SCALE



NOTES:

1. STEEL COLUMN BY OTHERS.
2. BASE PLATE AND ANCHOR BOLTS BY OTHERS.
3. 1 1/2"± DRYPACK.
4. 1" CHAMFER.
5. #3 TIES AT 2" O.C.
6. 30" DIA CONCRETE PIER WITH (8)–#6 VERTICALS AND #3 TIES AT 12" O.C.
7. DOUBLE NUTS.
8. 4'–8".

112 VACUUM CANOPY – 9'–7" (MAX) POLE
NO SCALE

Jaramillo-Tonneson & Associates
consulting structural engineers
JTA Engineering, LLC
15825 S 46th St. Suite 129
Phoenix, AZ. 85048-0045
https://jtaengineering.com
480.442.2179 Sergio Jaramillo
602.492.6426 Joe Tonneson

PROJECT NUMBER: 2022152	PROJECT MANAGER: SJ/jS

drawings that are not signed, sealed & dated by the engineer of record are considered preliminary and are not for construction. any requested changes after bid documents are issued will be considered a change order and will be billed hourly to the requesting party.

STAMP
COLORADO LICENSED
JOSEPH S. TONNESON
00052313
PROFESSIONAL ENGINEER
01/19/2023

JESSE GOLDMAN, ARCHITECT
2696 S COLORADO BLVD, SUITE 525
DENVER, CO 80222
(303) 962-9164

THESE DRAWINGS AND SPECIFICATIONS, AS INSTRUMENTS OF SERVICE, ARE AND SHALL REMAIN THE PROPERTY OF CSHQA. THESE DOCUMENTS ARE NOT TO BE USED ON THE PROJECT FOR WHICH THEY ARE MADE IS EXECUTED OR PARTIALLY EXECUTED. THESE DOCUMENTS ARE NOT TO BE USED BY ANY PERSON OR ENTITY ON OTHER PROJECTS OR EXTENSIONS TO THIS PROJECT EXCEPT BY AGREEMENT IN WRITING AND WITH APPROPRIATE COMPENSATION TO CSHQA ARCHITECT OFFICE AFFILIATES. Copyright © 2022

QUICK N CLEAN CAR WASH

PARKER RD. & PINE LANE AVE.

PARKER, CO

2696 S COLORADO BLVD, SUITE 525
DENVER, CO 80222
(303) 962-9164
www.cshqa.com

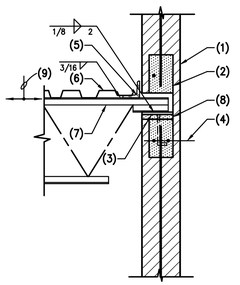
CSHQA

PROJECT	DATE
20037.000	10–10–2022
DRAWN	CHECKED
JS	SJJ

REVISED

SHEET TITLE
FDN DETAILS

SHEET
S3.1



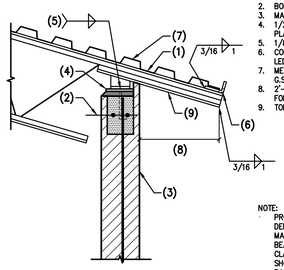
NOTES:

1. MASONRY WALL.
2. GROUT SOLID.
3. 1/2"x6"x8" STEEL BEARING PLATE WITH (2) 3/4"ø ANCHOR BOLTS. 16" DEEP (MIN) CONT. BOND BEAM PER G.S.N.
4. CONTINUOUS STEEL LEDGER.
5. STEEL DECK.
6. STEEL JOIST.
7. 1"± DRYPACK.
8. JOIST MANUFACTURER TO DESIGN FOR AXIAL LOAD; TENSION OR COMPRESSION 2.4K WIND.

NOTE:
AXIAL LOAD FOR JOIST IS UNFACTORED. JOIST ENGINEER MAY USE ASD OR LRFD FOR DESIGN.

201 STEEL JOIST AT MASONRY WALL

NO SCALE



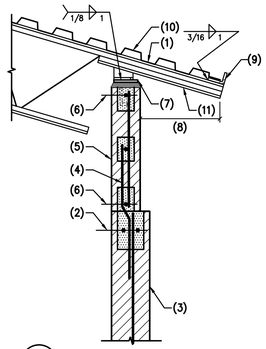
NOTES:

1. JOIST MFR TO DESIGN SPECIAL STEEL JOIST WITH TOP CHORD EXTENSION AND RADIUS (REFER TO ARCH'L).
2. BOND BEAM PER G.S.N.
3. MASONRY WALL.
4. 1/2"x6"x8" STEEL BEARING PLATE OVER 1"± DRYPACK.
5. 1/8" x 1" AT K JOISTS.
6. CONT. L3x2x1/4 (LLH) STEEL LEDGER.
7. METAL DECK. ATTACH PER G.S.N.
8. 2'-0" MAX. REFER TO ARCH'L FOR EXACT DIMENSION.
9. TOP CHORD EXTENSION.

NOTE:
PROVIDE SPECIAL JOIST SHOE DEPTH WHERE REQUIRED TO MAINTAIN CONSTANT JOIST BEARING ELEVATION. FOR CLARITY STEEL DECK NOT SHOWN.
RADIUS JOIST NOT SHOWN FOR CLARITY.

202 STEEL JOIST AT MASONRY WALL

NO SCALE

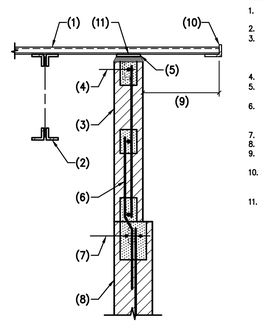


NOTES:

1. JOIST MFR TO DESIGN SPECIAL STEEL JOIST WITH TOP CHORD EXTENSION AND RADIUS (REFER TO ARCH'L).
2. BOND BEAM PER G.S.N.
3. MASONRY WALL.
4. #5 BENT BARS TO MATCH VERT. REINF. (LAP PER TYPICAL DETAIL).
5. 6" CMU W/ #5 VERT. AT 16" O.C. & (1)–#5 HORIZ. AT CMU TRANSITION & AT 16" O.C.
6. (1)–#5 CONT.
7. 1/2"x5"x12" STEEL BEARING PLATE W/ (2)–3/4"ø A.B. OVER ±1 1/2" DRYPACK.
8. 3'–0" MAX. REFER TO ARCH'L FOR EXAACT DIMENSION.
9. L3x2x1/4 (LLH) CONT. STEEL LEDGER.
10. METAL DECK. ATTACH PER G.S.N.
11. TOP CHORD EXTENSION.

203 STEEL JOIST AT MASONRY WALL

NO SCALE

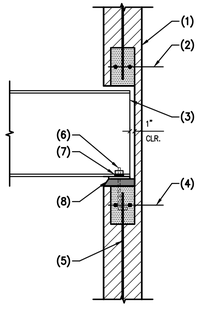


NOTES:

1. METAL DECK. ATTACH PER G.S.N.
2. STEEL JOIST.
3. 6" CMU W/ #5 VERT. AT 16" O.C. & (1)–#5 HORIZ. AT CMU TRANSITION & AT 16" O.C.
4. (1)–#5 CONT.
5. CONT. 1/2"x5" BEARING PLATE W/ 3/4"ø A.B. AT 24" O.C.
6. #5 BENT BARS TO MATCH VERT. REINF. (LAP PER TYPICAL DETAIL).
7. BOND BEAM PER G.S.N.
8. MASONRY WALL.
9. 2'–4" MAX. REFER TO ARCH'L FOR OVERHANG.
10. CONT. 3x2x1/4 (LLH) STEEL LEDGER (CURVED AS REQ'D PER ARCH'L).
11. ATTACH METAL DECK AS PER G.S.N.

204 STEEL DECK AT MASONRY WALL

NO SCALE

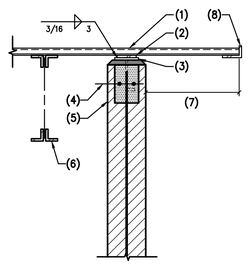


NOTES:

1. MASONRY WALL.
2. BOND BEAM PER G.S.N.
3. STEEL BEAM.
4. (2)–#5 x 3'–6" LONG IN 8" DEEP x 4'–0" LONG GROUTED BOND BEAM.
5. PROVIDE (2)–#5 FOR 3 CELLS AT BEAM BEARING.
6. (2)–3/4" DIA. AUTOMATIC WELDED THREADED STUDS ON BEAM GAGE (TIGHTEN NUTS FINGERTIGHT).
7. 1 1/2" LONG SLOTTED HOLES ON BEAM GAGE– TO RECEIVE STUDS.
8. 3/4"x6"x12" STEEL BEARING PLATE WITH (2)–3/4" DIA ANCHORS OVER 1" ± DRYPACK.

205 STEEL BEAM AT MASONRY WALL

NO SCALE

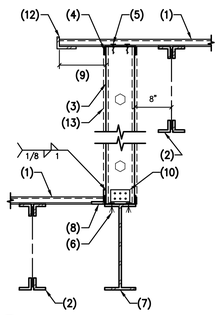


NOTES:

1. STEEL DECK – FOR DIRECTION, SEE PLAN.
2. CONT. STEEL PLATE 1/4"x4".
3. STEEL PLATE 1/4"x6"x6" WITH (2)–3/4" DIA ANCHORS OVER 1"± DRYPACK – LOCATE PLATES AT 32" O.C.
4. BOND BEAM PER G.S.N.
5. MASONRY WALL.
6. STEEL JOIST.
7. 2'–4" MAX. REFER TO ARCH'L.
8. CONT. 3x2x1/4 (LLH) STEEL LEDGER.

206 STEEL DECK AT MASONRY WALL

NO SCALE

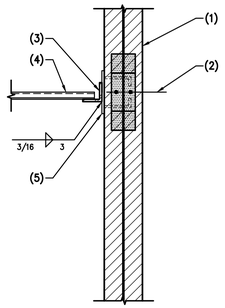


NOTES:

1. METAL DECK. ATTACH PER G.S.N.
2. STEEL JOIST.
3. 600S152–54 AT 12" O.C.
4. CONT. 18 GA. TOP & BOTTOM TRACK.
5. (2)–#10 TEK SCREWS AT 6" O.C.
6. (2) HILTI X–U DRIVEN FASTENERS AT 6" O.C.
7. STEEL BEAM.
8. CONT. 3"x3"x1/4" STEEL LEDGER (LLH).
9. 2'–4" MAX. REFER TO ARCH'L FOR DIMENSION.
10. SIMPSON FCS2 AT EACH END AND 24" O.C. W/ (6)–#10 TEK SCREWS.
11. CONT. 3x3x1/4 LONGER (CORNER AS REQ'D PER ARCH'L).
12. CONT. 3x2x1/4 (LLH) (CURVED AS REQ'D PER ARCH'L).
13. 1/2" OSB SHEATHING W/ #8 TEK SCREWS AT 4" O.C. AT EDGE AND 12" O.C. AT FIELD.

207 LIGHT GAGE WALL AT STEEL BEAM

NO SCALE

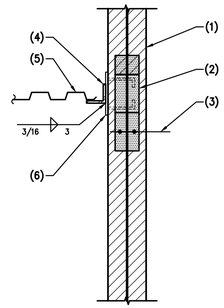


NOTES:

1. MASONRY WALL.
2. BOND BEAM PER G.S.N.
3. CONTINUOUS LEDGER ANGLE.
4. STEEL DECK – FOR DIRECTION, SEE PLAN.
5. STEEL PLATE 1/4"x4"x9" WITH (2)–3/4" DIA ANCHORS AT 6" O.C. – GROUT 4" MIN ALL AROUND ANCHORS.

208 LEDGER ANGLE AND STEEL DECK AT MASONRY WALL

NO SCALE

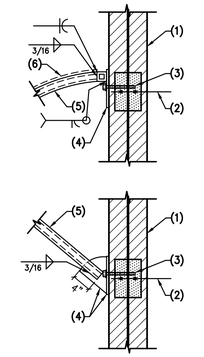


NOTES:

1. MASONRY WALL.
2. GROUT CONTINUOUS FROM BOND BEAM TO 4" ABOVE ROOF LINE.
3. BOND BEAM PER G.S.N.
4. CONTINUOUS LEDGER ANGLE.
5. STEEL DECK – FOR DIRECTION, SEE PLAN.
6. STEEL PLATE 1/4"x4"x9" WITH (2)–3/4" DIA ANCHORS AT 6" O.C. – GROUT 4" MIN ALL AROUND ANCHORS.

209 LEDGER ANGLE AND STEEL DECK AT MASONRY WALL

NO SCALE



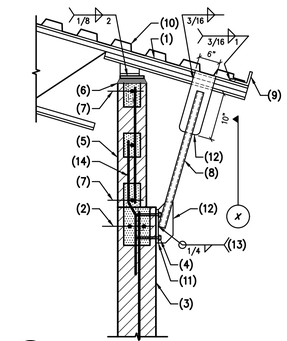
NOTES:

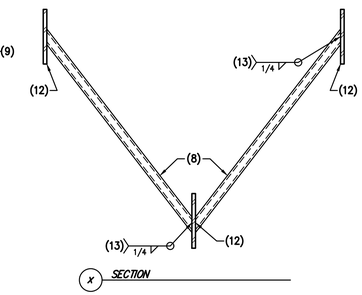
1. MASONRY WALL.
2. BOND BEAM PER G.S.N.
3. STEEL BEAM.
4. CONT. 3"x3"x1/4" STEEL LEDGER (LLH).
5. HSS 2"x2"x1/4"
6. METAL SHADE PER ARCH'L.

NOTE:
FOR ALL STEEL AWNING.

210 STEEL AWNING AT MASONRY WALL

NO SCALE





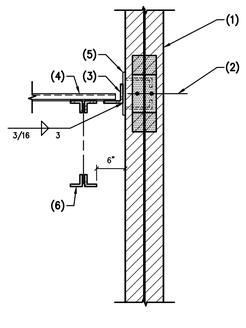
NOTES:

1. SPECIAL STEEL JOIST WITH TOP CHORD EXTENSION AND RADIUS (REFER TO ARCH'L).
2. BOND BEAM PER G.S.N.
3. MASONRY WALL.
4. (2)–5/8"x6" HILTI SCREW ANCHORS (ESR–3056).
5. 6" CMU W/ #5 VERT. AT 16" O.C. & (1)–#5 HORIZ. AT CMU TRANSITION & AT 16" O.C.
6. 1/2"x5"x12" STEEL BEARING PLATE W/ (2)–3/4"ø A.B. OVER ±1 1/2" DRYPACK.
7. (1)–#5 CONT.
8. 2"ø STANDARD STEEL PIPE.
9. L3x2x1/4 (LLH) CONT. STEEL LEDGER.
10. METAL DECK. ATTACH PER G.S.N.
11. 1/4"x8"x6" STEEL PLATE.
12. 1/4" STEEL PLATE.
13. WELD PLATE TO PLATE.
14. #5 BENT BARS TO MATCH VERT. REINF. (LAP PER TYPICAL DETAIL).

NOTE:
FOR ADD'L INFORMATION NOT SHOWN OR CALLED OUT. REFER TO DETAIL 203.
FOR PLATE DIMENSIONS AND BRACE ANGLE. REFER TO ARCH'L DRAWINGS.

211 STEEL JOIST BRACE AT MASONRY WALL

NO SCALE

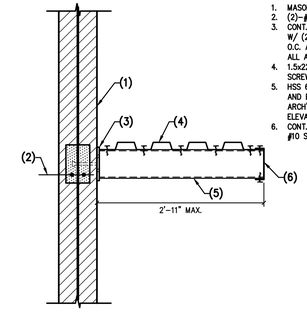


NOTES:

1. MASONRY WALL.
2. BOND BEAM PER G.S.N.
3. CONTINUOUS LEDGER ANGLE.
4. STEEL DECK – FOR DIRECTION, SEE PLAN.
5. STEEL PLATE 1/4"x4"x9" WITH (2)–3/4" DIA ANCHORS AT 6" O.C. – GROUT 4" MIN ALL AROUND ANCHORS.
6. SPECIAL CURVED STEEL JOIST.

212 STEEL JOIST AT MASONRY WALL

NO SCALE



NOTES:

1. MASONRY WALL.
2. (2)–#5 CONT.
3. CONT. 3/8"x7" STEEL PLATE W/ (2)–3/4"ø H.S. AT 24" O.C. AND EACH END (GROUT 4" ALL AROUND H.S.).
4. 1.5x22 GA STEEL DECK W/ #10 SCREWS AT 6" O.C.
5. HSS 6x2x3/16 AT 4'–0" O.C. AND EACH END (REFER TO ARCH'L FOR LOCATION AND ELEVATION –TYP).
6. CONT. 600T250–54 FASCIA W/ #10 SCREW TOP & BOTTOM.

213 STEEL CANOPY AT MASONRY WALL

NO SCALE

Jaramillo·Tonneson & Associates
consulting structural engineers
JTA Engineering, LLC
15825 S 46th St. Suite 129
Phoenix, AZ. 85048-0045
https://jtaengineering.com
480.442.2179 Sergio Jaramillo
602.492.6426 Joe Tonneson

PROJECT NUMBER: 2022152	PROJECT MANAGER: SJ/jS

drawings that are not signed, sealed & dated by the engineer of record are considered preliminary and are not for construction. any requested changes after bid documents are issued will be considered a change order and will be billed hourly to the requesting party.

COLORADO LICENSED
JOSEPH S. TONNESON
00523133
PROFESSIONAL ENGINEER
01/19/2023
STAMP

JESSE GOLDMAN, ARCHITECT
2696 S COLORADO BLVD, SUITE 525
DENVER, CO 80222
(303) 962-9164

THESE DRAWINGS AND SPECIFICATIONS, AS INSTRUMENTS OF SERVICE, ARE AND SHALL REMAIN THE PROPERTY OF THE ARCHITECT WHETHER THE PROJECT FOR WHICH THEY ARE MADE IS EXECUTED OR NOT. THEY ARE NOT TO BE USED IN WHOLE OR IN PART, NOT TO BE LOANED BY ANY PERSON OR ENTITY ON OTHER PROJECTS WITHOUT THE EXPRESS WRITTEN CONSENT OF THE ARCHITECT. COMPLETION OF THIS PROJECT WHEN PHASED WITHOUT THE ARCHITECT'S CONSENT VOIDS ALL ARCHITECT'S AFFILIATES. Copyright © 2022

QUICK N CLEAN CAR WASH

PARKER RD. & PINE LANE AVE.

PARKER, CO

2696 S COLORADO BLVD, SUITE 525
DENVER, CO 80222
(303) 962-9164
www.cshqa.com

CSHQA

PROJECT	DATE
20037.000	10–10–2022
DRAWN	CHECKED
JS	SJJ

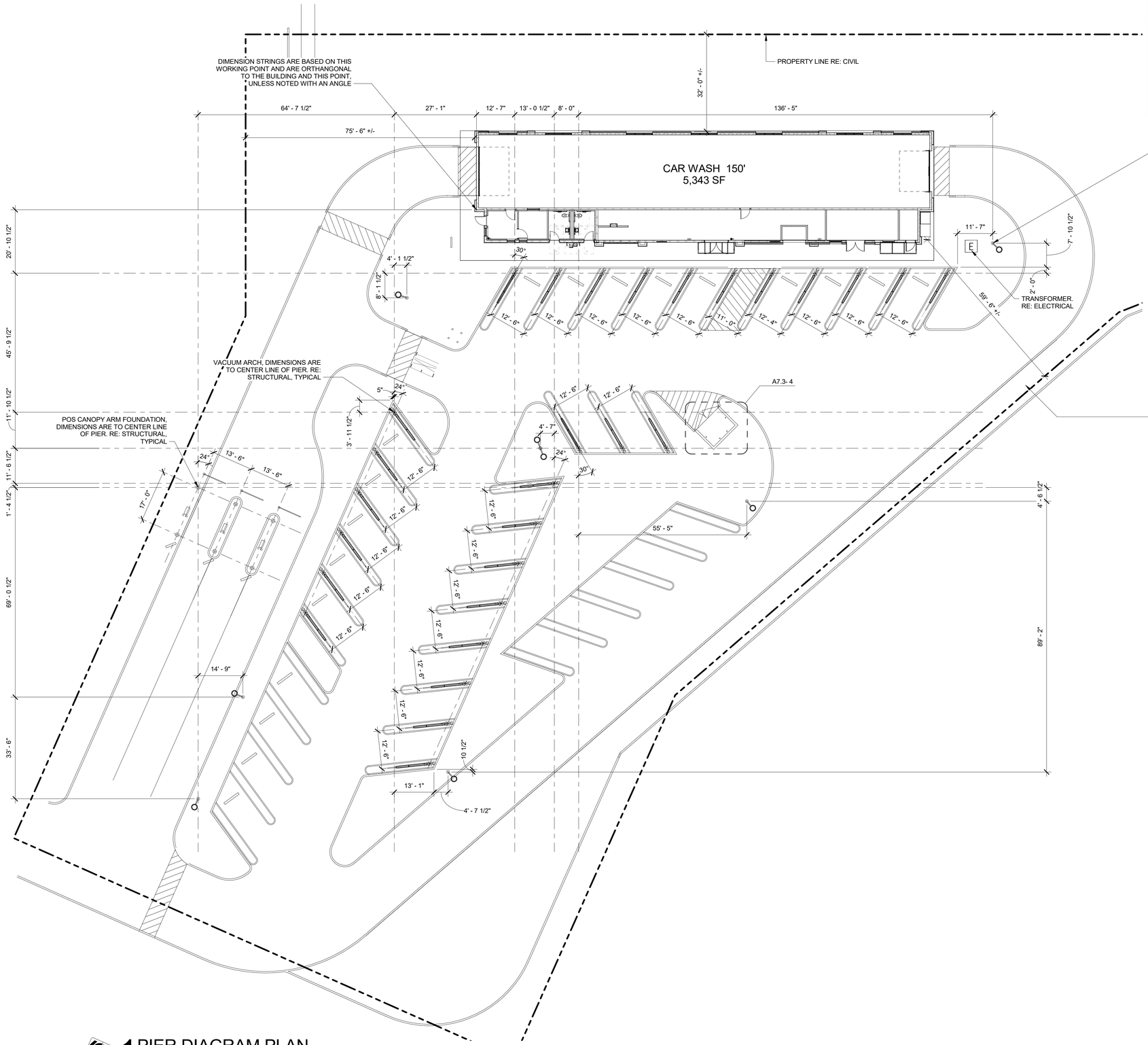
REVISED

SHEET TITLE

FRAMING DETAILS

SHEET

S4.1



1 PIER DIAGRAM PLAN
1/16" = 1'-0"

GENERAL NOTES:

A. THIS DRAWING HAS BEEN PREPARED FOR GENERAL REFERENCE AND IDENTIFIES OVERALL ARRANGEMENT OF THE KNOWN PIER FOUNDATION POSITIONS, MEASURED TO THEIR CENTERS, NECESSARY FOR BOTH THE PROPOSED VACUTECH AND SITE LIGHTING SYSTEMS. THE GENERAL CONTRACTOR IS RESPONSIBLE FOR CONFIRMING ALL WITH THE CIVIL, VACUTECH AND ELECTRICAL PACKAGES. CONFIRMATION OF THESE PIER FOUNDATION LOCATIONS MUST BE COMPLETED PRIOR TO FOUNDATION COMMENCEMENT.

STATE OF COLORADO
JESSE GOLDMAN
400744
01-19-2023
LICENSED ARCHITECT

JESSE GOLDMAN, ARCHITECT
2696 S COLORADO BLVD, SUITE 525
DENVER, CO 80222
(303) 962-9164

THESE DRAWINGS AND SPECIFICATIONS AS INSTRUMENTS OF SERVICE ARE AND SHALL REMAIN THE PROPERTY OF THE ARCHITECT. ENGINEER WHETHER THE PROJECT FOR WHICH THEY ARE MADE IS EXECUTED OR NOT. THESE DRAWINGS AND SPECIFICATIONS ARE NOT TO BE USED ON ANY PROJECT OTHER THAN THE PROJECT FOR WHICH THEY HAVE BEEN PREPARED AND SHALL NOT BE LOANED, COPIED OR DISCLOSED BY ANY PERSON OR ENTITY (OR OTHER PERSONS OR ENTITIES) WITHOUT THE WRITTEN CONSENT OF THE ARCHITECT. THE VISUAL CONTRACT BETWEEN THE ARCHITECT AND OTHERS SHALL NOT BE CONSTRUED AS PUBLICATION IN DEROGATION OF THE ARCHITECT'S COMMON LAW COPYRIGHT OR OTHER PROPERTY RIGHTS. ANY REUSE WITHOUT PRIOR WRITTEN VERIFICATION OR ADAPTATION BY THE ARCHITECT FOR THE SPECIFIED PROJECT SHALL BE AT THE USER'S SOLE RISK AND WITHOUT LIABILITY OR LEGAL EXPOSURE TO THE ARCHITECT. ANY AND ALL CLAIMS ARISING FROM OR IN CONNECTION WITH SUCH REUSE OR ADAPTATION SHALL BE INDEMNIFIED BY THE USER. THE USER SHALL FURTHER INDEMNIFY THE ARCHITECT FOR ALL EXPENSES AND LEGAL FEES ARISING OUT OF ANY ACTIVITY OR LITIGATION RELATED TO SUCH REUSE.
Copyright © 2023

QUICK N CLEAN CAR WASH

PARKER RD. & PINE LANE AVE.
PARKER, CO

2696 S COLORADO BLVD, SUITE 525
DENVER, CO 80222
(303) 962-9164
www.cshqa.com

CSHQA

PROJECT	DATE
20037.000	1-19-2023
DRAWN	CHECKED
RJ	WRS

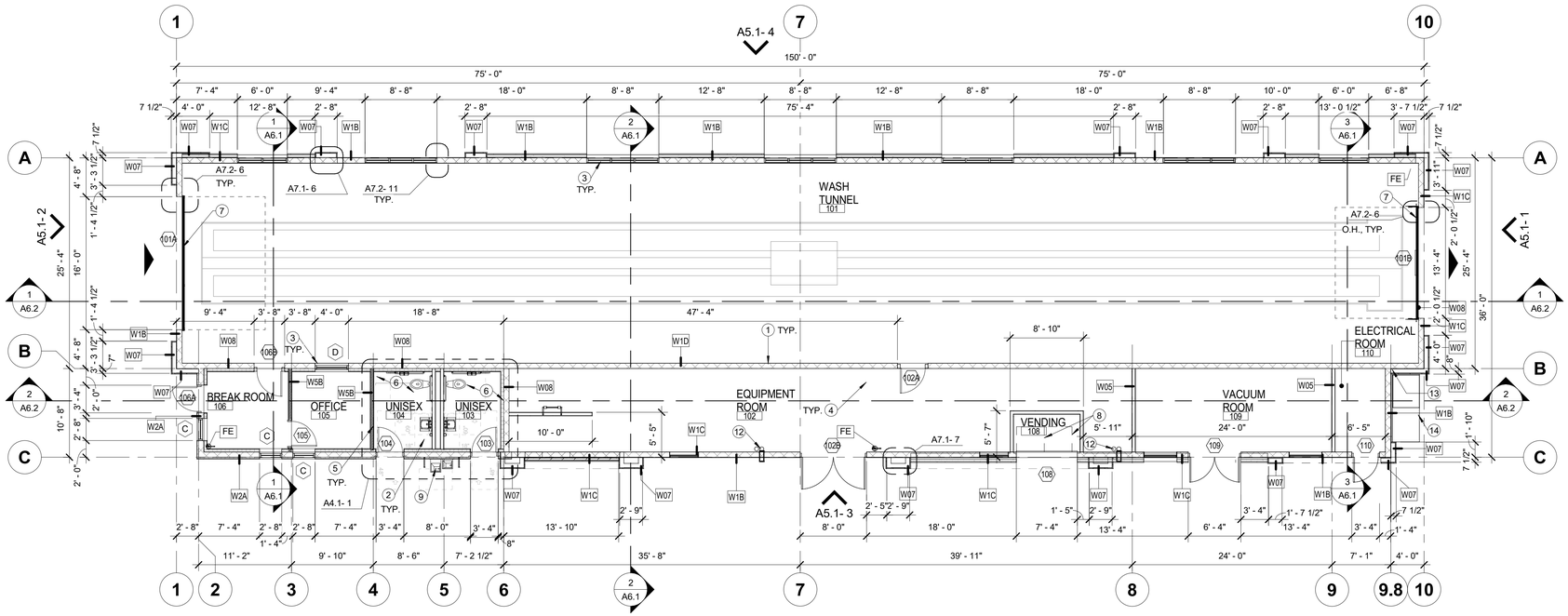
REVISED

SHEET TI **PIER DIAGRAM PLAN**

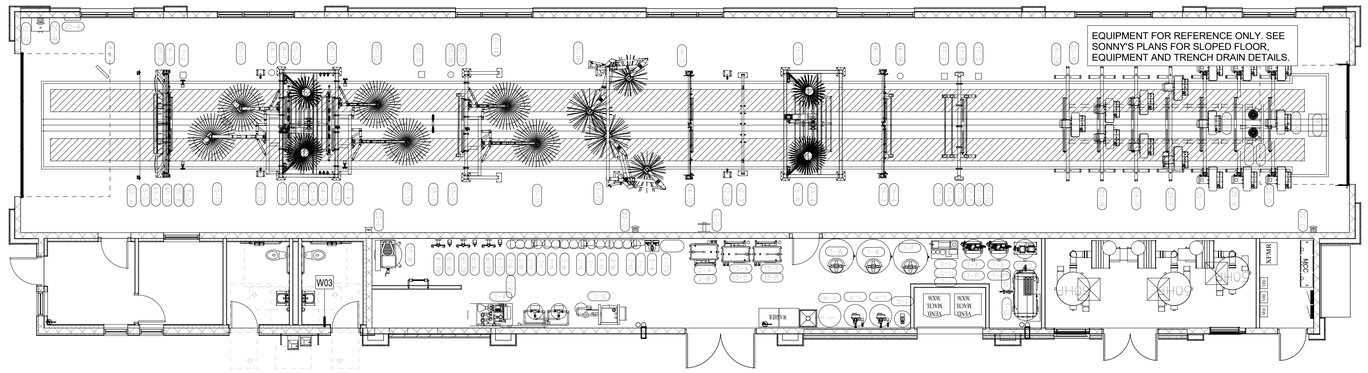
SHEET **A0.1**

ORIGINAL SHEET SIZE
24" x 36"

1/19/2023 12:24:12 PM



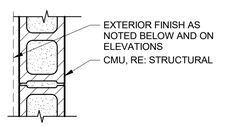
1 FLOOR PLAN
1/8" = 1'-0"



4 EQUIPMENT PLAN
1/8" = 1'-0"

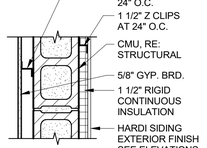
3 WALL TYPES
1" = 1'-0"

W1A, W1B, W1C — EXTERIOR CMU WALL



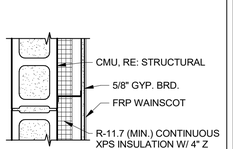
NOTES:
- W1A: BRICK VENEER ON EXTERIOR SIDE SCORED CMU BLOCK, INSIDE
- W1B: HARDI SIDING FINISH ON EXTERIOR SIDE SCORED CMU BLOCK, INSIDE
- W1C: STONE STUCCO ON EXTERIOR SIDE, SCORED CMU BLOCK, INSIDE
- W1D: SCORED CMU BLOCK

W2A, W2B — INTERIOR GYP BOARD @ OFFICE



NOTE:
- EXTEND METAL FURRING TO CEILING
- W2B: WATER RESISTANT GYPSUM BOARD TO 48" A.F.F. AT RESTROOMS

W03 — RESTROOM CMU WALL



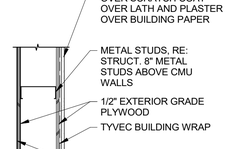
NOTE:
- WATER RESISTANT GYPSUM BOARD TO 48" A.F.F. AT RESTROOMS
- EXTEND WALL TO BOTTOM OF STRUCTURE

W05, W5B — INTERIOR STUD WALL



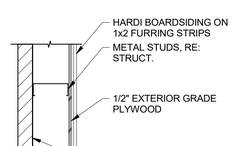
NOTE:
- RE: A2.1-5 FOR BRACING CONNECTIONS
- EXTEND WALL 6" ABOVE CEILING, WALLS AT EQUIPMENT ROOM TO GO TO BOTTOM OF STRUCTURE
- PROVIDE SOUND ATTENUATING BATT INSULATION AT OFFICE WALLS FOR ACOUSTICAL CONTROL

W06 — STUCCO ON METAL STUD



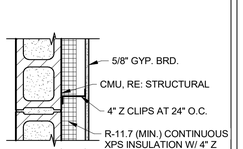
NOTE:
INSTALL AS RECOMMENDED BY MANUFACTURER

W07 — EXTERIOR FURRING



NOTE:
- SEE PLAN DETAILS A7.1 - 6, A7.1 - 7

W08 — CMU FURRING WALL



NOTE:
- EXTEND WALL TO BOTTOM OF STRUCTURE

W09 — NOT USED

GENERAL NOTES:

A. UNLESS OTHERWISE NOTED, HINGE SIDE OF DOOR FRAME SHALL BE MOUNTED 4" FROM ADJACENT WALL CONSTRUCTION.

B. ALL WALL DIMENSIONS ARE TO FACE OF STUD AND/OR NOMINAL FACE OF MASONRY.

C. DIMENSIONS SHOWN ON PLAN ARE BASED ON BEST AVAILABLE INFORMATION PROVIDED BY BUILDING OWNER. GC TO FIELD VERIFY EXACT DIMENSIONS AND NOTIFY ARCHITECT OF ANY DISCREPANCIES.

D. VERIFY DIMENSIONS OF ALL FIXTURES AND EQUIPMENT PROVIDED BY OWNER.

E. MAKE ALL CONNECTIONS TO EQUIPMENT PER MANUFACTURER'S REQUIREMENTS.

F. PROVIDE SOLID BLOCKING OR OTHER SUITABLE BACKING AT LOCATIONS INCLUDING, BUT NOT LIMITED TO, THE FOLLOWING: EDGES WHERE FINISH MATERIALS CHANGE, GRAB BARS, WALL HUNG SINKS, DOOR STOPS, SHELF BRACKETS, HANDRAILS, ELECTRIC HAND DRYERS, AND ALL MOUNTED EQUIPMENT, INCLUDING EQUIPMENT FURNISHED BY OWNER.

G. VERIFY EGRESS REQUIREMENTS WITH AUTHORITY HAVING JURISDICTION. VERIFY FINAL LOCATIONS OF EXIT SIGNS AND EGRESS ILLUMINATION.

H. ALL WALL FINISHES, UNLESS OTHERWISE NOTED, TO BE TAPED, SANDED SMOOTH, AND PAINT READY. COLOR TO BE SELECTED BY OWNER.

I. MINUS AND PLUS DIMENSIONS GIVEN ON THE FLOOR PLAN WITH A (T.O.C) DESIGNATION REPRESENT THE TOP OF CONCRETE SLAB ELEVATION WITH RESPECT TO THE DATUM FINISH FLOOR ELEVATION OF 100'-0", E.G. (+6" T.O.C.).

SHEET NOTES:

1. WALL, RE: WALL TYPES.
2. RESTROOM FIXTURES, RE: A4.1-1 & A4.1-8.
3. STOREFRONT SYSTEM AND GLAZING, RE: A4.1 & A7.2.
4. DOOR, RE: DOOR AND HARDWARE SCHEDULE. RE: A4.1.
5. PARTITION WALL TO 6" ABOVE CEILING, RE: WALL TYPES & A1.1-3.
6. ROOM TO RECEIVE FINISHES, RE: A4.1-9.
7. OVERHEAD DOOR, RE: A41.1 & A7.1 G.C. TO COORDINATE WITH OWNER FOR EXACT REQUIREMENTS.
8. VENDING MACHINE, OWNER FURNISHED, OWNER INSTALLED. G.C. TO COORDINATE WITH OWNER FOR EXACT REQUIREMENTS.
9. HIGH / LOW DRINKING FOUNTAIN, RE: PLUMBING AND ELECTRICAL DRAWINGS.
10. SERVICE SINK, RE: PLUMBING DRAWINGS.
11. NOT USED.
12. ROOF AND OVERFLOW DRAIN THROUGH WALL, RE: A8.1-15, 15 & PLUMBING.
13. CONTROL JOINT AND CHANGE IN PAINT COLOR, RE: EXTERIOR ELEVATIONS.
14. ELECTRICAL SERVICE ENTRANCE SECTION (SES)

STATE OF COLORADO
JESSE GOLDMAN
400744
01-19-2023
LICENSED ARCHITECT

JESSE GOLDMAN, ARCHITECT
2696 S COLORADO BLVD, SUITE 525
DENVER, CO 80222
(303) 962-9164

THESE DRAWINGS AND SPECIFICATIONS AS INSTRUMENTS OF SERVICE ARE AND SHALL REMAIN THE PROPERTY OF THE ARCHITECT. ENGINEER WHETHER THE PROJECT FOR WHICH THEY ARE MADE IS EXECUTED OR NOT. THESE DRAWINGS AND SPECIFICATIONS ARE NOT TO BE USED BY ANY PERSON OR ENTITY ON OTHER PROJECTS, FOR ADDITIONS TO THIS PROJECT, OR FOR COMPLETION OF THIS PROJECT BY OTHERS WITHOUT THE EXPRESS WRITTEN PERMISSION OF THE ARCHITECT. © COPYRIGHT BY JESSE GOLDMAN 2023
Copyright © 2023

QUICK N CLEAN CAR WASH
PARKER, CO
PARKER RD. & PINE LANE AVE.
2696 S COLORADO BLVD, SUITE 525
DENVER, CO 80222
(303) 962-9164
www.cshqa.com
CSHQA

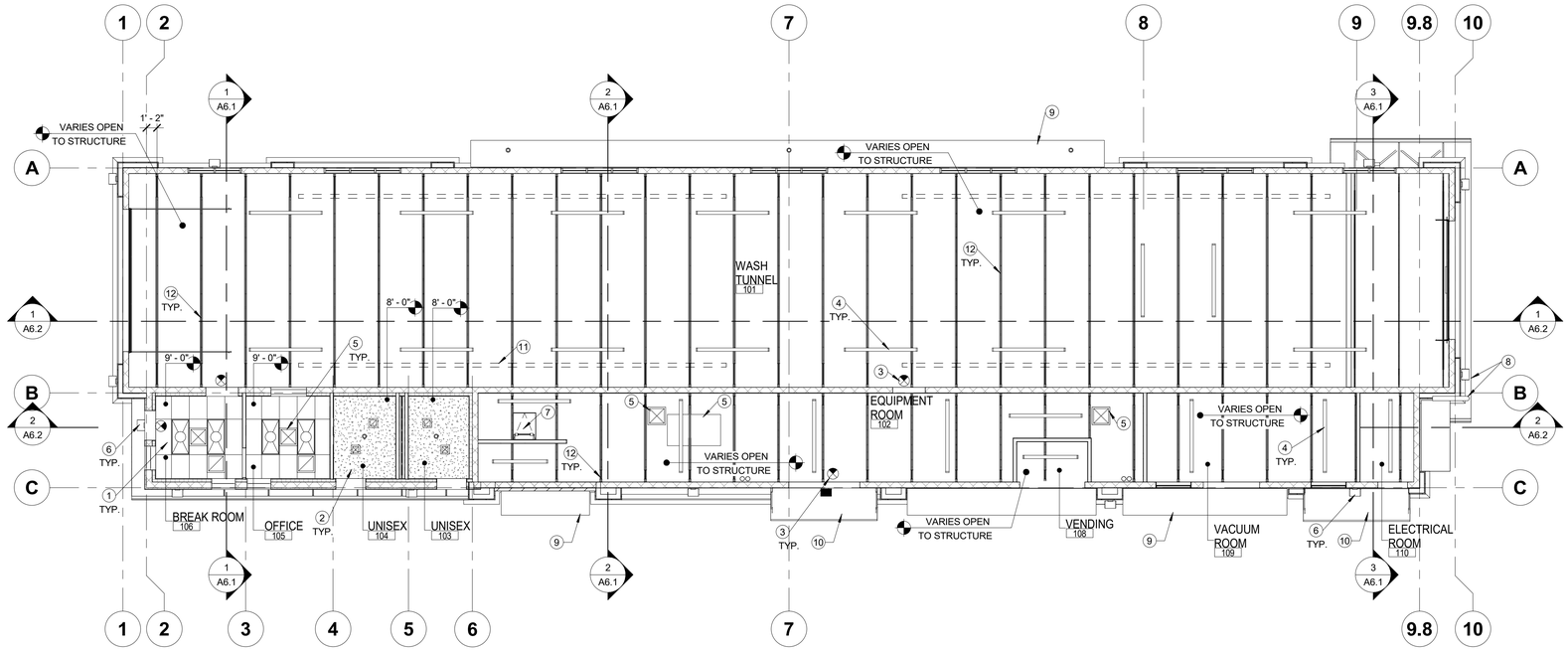
PROJECT	DATE
20037.000	1-19-2023
DRAWN	CHECKED
RJ	WRS

REVISED

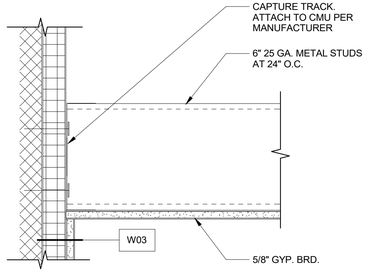
SHEET TITLE
FLOOR PLAN

SHEET
A1.1
ORIGINAL SHEET SIZE
24" x 36"

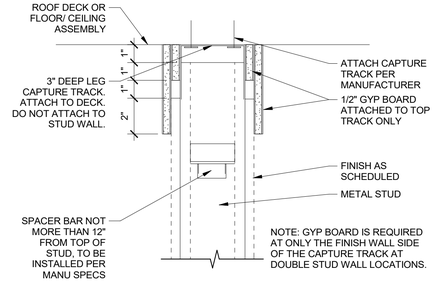
1/19/2023 12:24:13 PM



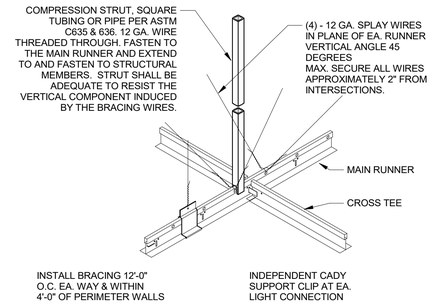
1 REFLECTED CEILING PLAN
1/8" = 1'-0"



2 GYP BOARD CEILING
3" = 1'-0"

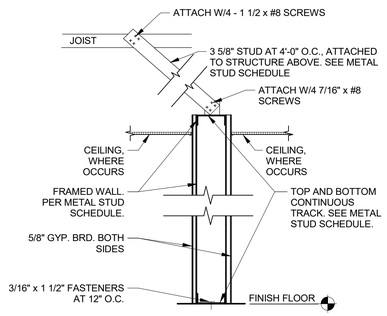


3 STUD SLIP JOINT
3" = 1'-0"



4 SUSPENDED CEILING SYSTEM
1 1/2" = 1'-0"

METAL STUD SCHEDULE					
SIZE	DESIGNATION	SPACING (INCHES)	HEIGHT (HT.)	TOP & BOT. TRACKS	DIAG. BRACE
3 5/8" x 18 GA.	362S162-43	16	20'-0"	20GA.	20GA.
4" x 18 GA.	400S162-43	16	20'-0"	18GA.	20GA.
6" x 20 GA.	600S162-33	16	20'-0"	18GA.	20GA.
6" x 16 GA.	600S162-54	16	20'-0"	18GA.	18GA.



5 PARTITION DETAIL
1/4" = 1'-0"

LEGEND:

- 2X4 RECESSED LIGHT FIXTURE
- RECESSED DOWNLIGHT FIXTURE, RE: ELECTRICAL
- MECHANICAL SYSTEMS, RE: MECHANICAL.
- 6' LED STRIP, RE: ELECTRICAL
- 8' LED STRIP, RE: ELECTRICAL
- EXIT SIGN
- EMERGENCY EGRESS LIGHT ABOVE DOOR
- LIGHT
- 2' X 4' SUSPENDED ACOUSTICAL CEILING SYSTEM: OLYMPIA MICRO CINEMAPLUS PERFORMANCE, 4411 WHITE OR EQUAL. USG DONN BRAND DX/DXL ACOUSTICAL SUSPENSION SYSTEM, FLAT WHITE COLOR OR EQUAL.
- GYPSUM BOARD CEILING

GENERAL NOTES:

A. ALL WALL DIMENSIONS ARE TO FACE OF STUD AND/OR NOMINAL FACE OF MASONRY.

B. DIMENSIONS SHOWN ON PLAN ARE BASED ON BEST AVAILABLE INFORMATION PROVIDED BY BUILDING OWNER. GC TO FIELD VERIFY EXACT DIMENSIONS AND NOTIFY ARCHITECT OF ANY DISCREPANCIES.

C. VERIFY DIMENSIONS OF ALL FIXTURES AND EQUIPMENT PROVIDED BY OWNER.

D. MAKE ALL CONNECTIONS TO EQUIPMENT PER MANUFACTURER'S REQUIREMENTS.

E. ALL LAYING CEILINGS SHALL COMPLY WITH THE CEILING AND INTERIOR SYSTEMS CONSTRUCTION ASSOCIATION (CISCA) MANUAL GUIDELINES FOR SEISMIC RESTRAINT FOR DIRECT HUNG SUSPENDED CEILING ASSEMBLIES. RE: A2.1-2.

F. ALL CEILING MOUNTED EQUIPMENT SHALL BE LOCATED SQUARE AND SYMETRICAL TO ADJACENT COMPONENTS OR CONSTRUCTION UNLESS NOTED OTHERWISE.

G. WHERE ACOUSTICAL CEILINGS, ALL FIRE SPRINKLER HEADS SHALL BE CENTERED IN THE TILE UNLESS NOTED OTHERWISE.

H. ALL FINISHES, UNLESS OTHERWISE NOTED, TO MATCH EXISTING BUILDING FINISH.

SHEET NOTES:

1. SUSPENDED LAY IN CEILING & GRID. RE: A7.1-19
2. GYP. BOARD CEILING. RE: A4.1-9.
3. EXIT SIGN. RE: ELECTRICAL.
4. LIGHT FIXTURES. RE: ELECTRICAL.
5. MECHANICAL SYSTEM, RE: MECHANICAL.
6. EXTERIOR LIGHT. RE: ELEVATIONS FOR MOUNTING HEIGHTS, RE: ELECTRICAL
7. ROOF ACCESS HATCH
8. GUTTER AND DOWNSPOUT, RE: ROOF PLAN
9. HORIZONTAL PROJECTION RE: A7.1-1
10. ARCHED CANOPY RE: A7.1-2 AND A7.1-3
11. RADIANT HEATER RE: MECHANICAL
12. STEEL JOISTS, TRUSSES AND COLUMNS: FACTORY PRIMED AND PAINTED IN THE FIELD WITH WHITE MARINE GRADE DTM PAINT. CONFIRM PAINT SPECS WITH OWNER.

STATE OF COLORADO
JESSE GOLDMAN
400744
01-19-2023
LICENSED ARCHITECT

JESSE GOLDMAN, ARCHITECT
2696 S COLORADO BLVD, SUITE 525
DENVER, CO 80222
(303) 962-9164

THESE DRAWINGS AND SPECIFICATIONS AS INSTRUMENTS OF SERVICE ARE AND SHALL REMAIN THE PROPERTY OF THE ARCHITECT. ENGINEER WHETHER THE PROJECT FOR WHICH THEY ARE MADE IS EXECUTED OR NOT. THESE DRAWINGS AND SPECIFICATIONS SHALL NOT BE USED BY ANY PERSON OR ENTITY ON OTHER PROJECTS, FOR ADDITIONS TO THIS PROJECT, OR FOR COMPLETION OF THIS PROJECT WHEN PHASED WITHOUT THE WRITTEN PERMISSION OF THE ARCHITECT. ALL RIGHTS RESERVED
Copyright © 2023

QUICK N CLEAN CAR WASH
PARKER, CO
2696 S COLORADO BLVD, SUITE 525
DENVER, CO 80222
(303) 962-9164
www.cshqa.com

PARKER RD. & PINE LANE AVE.

CSHQA

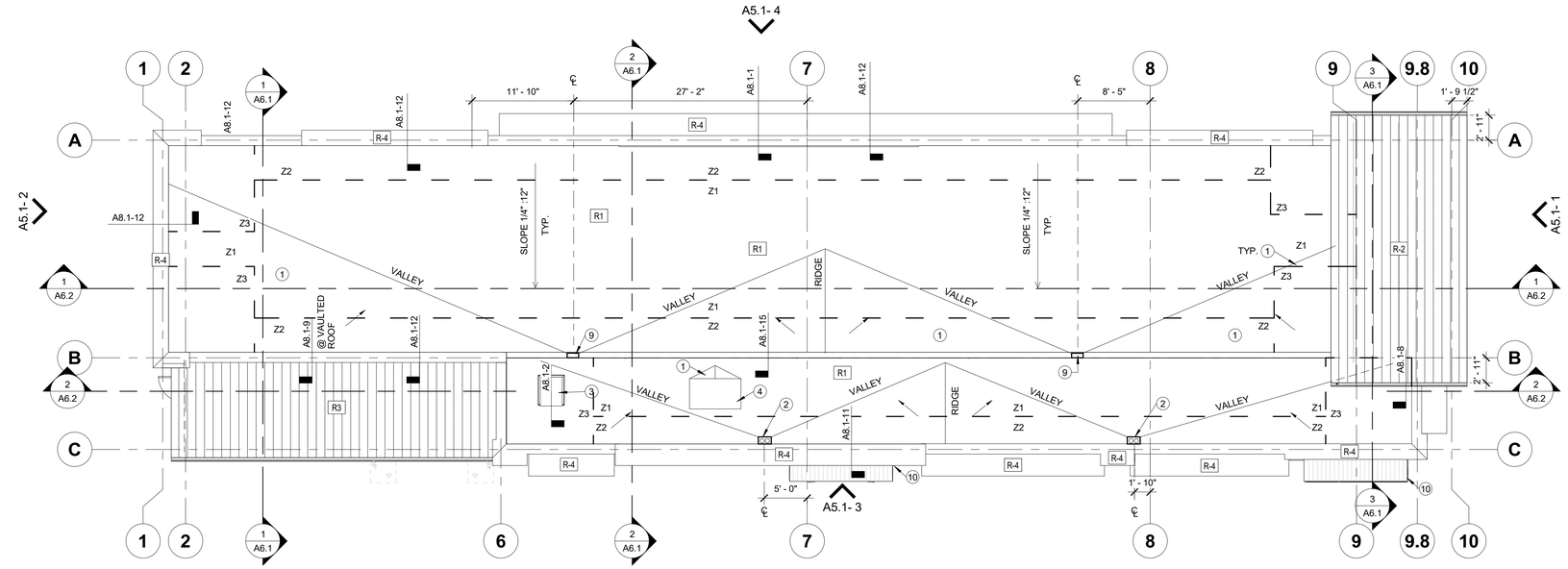
PROJECT	DATE
20037.000	1-19-2023
DRAWN	CHECKED
RJ	WRS

REVISED

REFLECTED CEILING PLAN

SHEET
A2.1
ORIGINAL SHEET SIZE
24" x 36"

1/19/2023 12:24:13 PM



1 ROOF PLAN
1/8" = 1'-0"

GENERAL NOTES:

A. COORDINATE ROOF PENETRATIONS WITH MECHANICAL AND STRUCTURAL.

B. THE CONTRACTOR SHALL PROVIDE TAPERED RIGID INSULATION CRICKETS AROUND ANY ROOF MOUNTED HVAC EQUIPMENT, ROOF HATCHES, OR OTHER ROOF MOUNTED ITEMS WHICH MAY OBSTRUCT THE FLOW OF NORMAL WATER DRAINAGE.

C. FLASH AROUND ALL VENT AND PIPE PENETRATIONS PER MANUFACTURER'S STANDARD DETAILS. COORDINATE WITH MECHANICAL AND ELECTRICAL DRAWINGS

D. ROOFING CONTRACTOR TO PROVIDE PROTECTION PADS AT SERVICE SIDE OF ALL ROOF TOP MECHANICAL UNITS AND ROOF HATCHES.

E. COORDINATE WITH STRUCTURAL FOR ROOF DECK AND JOIST BEARING INFORMATION.

F. GENERAL CONTRACTOR SHALL COORDINATE ALL ROOF TOP OPENING & CURBS WITH HVAC CONTRACTOR.

G. VERIFY ALL A/C HVAC UNIT EXHAUST FANS, VENTS, AND OTHER EQUIPMENT LOCATION W/ MECHANICAL DRAWINGS.

H. ROOF DRAINAGE IS SHOWN FOR REFERENCE ONLY. ALL ROOF AREAS SHALL SLOPE TO FACILITATE WATER DRAINAGE TO ROOF DRAINS, SCUPPERS, OR DOWNSPOUTS.

I. ALL SHEET METAL ON BUILDING: ROOF CURBS, FOR REFRIGERATION UNITS EXT. BY MECH. CONTRACTOR

J. ALL PENETRATIONS AND CORRESPONDING FLASHING ASSEMBLIES SHALL BE FURNISHED AND INSTALLED IN ACCORDANCE WITH ROOF MEMBRANE MANUFACTURER PUBLISHED RECOMMENDATIONS.

K. ALL MECHANICAL TO BE SCREENED BY PARAPET.

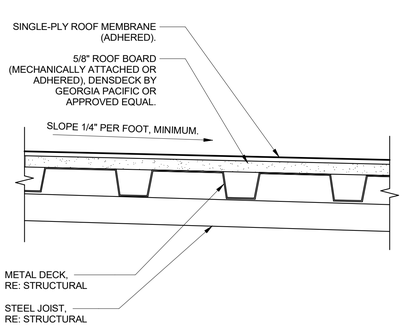
SHEET NOTES:

1. TAPERED ROOF INSULATION (CRICKET)
2. ROOF AND OVERFLOW DRAINS, RE: A8.1-4 AND PLUMBING.
3. ROOF HATCH. RE: A8.1-2.
4. MECHANICAL EQUIPMENT, RE: MECHANICAL DRAWINGS.
5. MECHANICAL EQUIPMENT'S EXHAUST PIPES, RE: MECHANICAL DRAWINGS.
6. NOT USED
7. NOT USED
8. NOT USED
9. ROOF STEP, SCUPPER RE: A8.1-5
10. METAL AWNING, ROOF ASSEMBLY TYPE R4. RE: ELEVATIONS.
11. NOT USED
12. GUTTER AND DOWNSPOUT. DOWNSPOUT CONTINUES THROUGH WALL AND DAYLIGHTS ON THE LOWER ROOF.

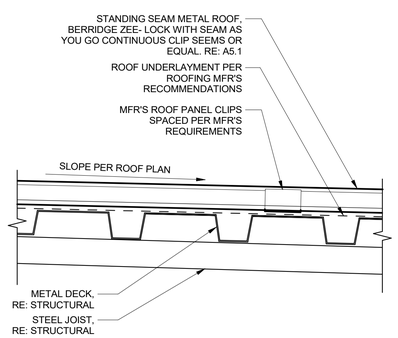
FASTENER/ADHESIVE RIBBON PATTERNS PER ZONE			
	FASTENER SPACING #12 SCREW WITH 3" PLATE		ADHESIVE RIBBON SPACING
Z1	ZONE 1 (FIELD)	12 SCREWS	12" O.C.
Z2	ZONE 2 (PERIMETER) 5' WIDE	18 SCREWS	6" O.C.
Z3	ZONE 3 (CORNERS) (10'-0" x 10'-0" SQUARE)	24 SCREWS	4" O.C.

2 ROOF ASSEMBLIES
3" = 1'-0"

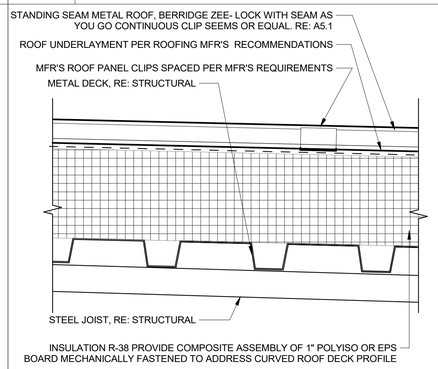
R1 FLAT SINGLE-PLY



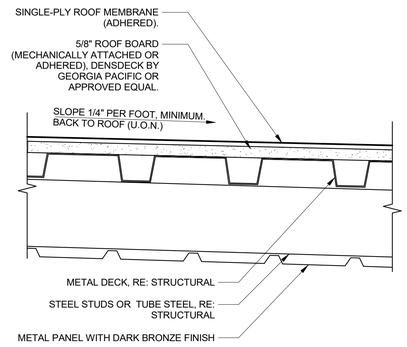
R2 VAULTED STANDING SEAM METAL ROOF



R3 INSULATED STANDING SEAM METAL ROOF



R4 CANOPY & PARAPET



STATE OF COLORADO
JESSE GOLDMAN
400744
01-19-2023
LICENSED ARCHITECT

JESSE GOLDMAN, ARCHITECT
2696 S COLORADO BLVD, SUITE 525
DENVER, CO 80222
(303) 962-9164

THESE DRAWINGS AND SPECIFICATIONS AS INSTRUMENTS OF SERVICE ARE AND SHALL REMAIN THE PROPERTY OF THE ARCHITECT. ENGINEER WHETHER THE PROJECT FOR WHICH THEY ARE MADE IS EXECUTED OR NOT. THESE DRAWINGS AND SPECIFICATIONS ARE NOT TO BE USED BY ANY PERSON OR ENTITY ON OTHER PROJECTS, FOR ADDITIONS TO THIS PROJECT, OR FOR COMPLETION OF THIS PROJECT BY OTHERS WITHOUT THE EXPRESS WRITTEN PERMISSION OF THE ARCHITECT. ALL RIGHTS RESERVED.
Copyright © 2023

QUICK N CLEAN CAR WASH
PARKER RD. & PINE LANE AVE.
PARKER, CO
2696 S COLORADO BLVD, SUITE 525
DENVER, CO 80222
(303) 962-9164
www.cshqa.com

CSHQA

PROJECT	DATE
20037.000	1-19-2023
DRAWN	CHECKED
RJ	WRS

REVISED

SHEET TITLE
ROOF PLAN

SHEET
A3.1
ORIGINAL SHEET SIZE
24" x 36"

1/19/2023 1:54:32 PM

9 ROOM FINISH SCHEDULE

	ROOM NAME	FLOOR	WALLS						CEILING			NOTES
		FINISH	BASE	MATERIAL	NORTH	EAST	SOUTH	WEST	MATERIAL	FINISH	HEIGHT	
101	WASH TUNNEL	F-1	-	CMU	*	*	*	*	-	P-1	O.T.S.	*EXTRUTECH UP TO 12' W/ WHITE EPOXY PAINT ON WALLS AND CEILING ABOVE
102	EQUIPMENT ROOM	F-1	-	CMU	P-2	P-2	P-2	P-2	-	-	O.T.S.	
103	UNISEX RESTROOM	T-1	B-2	GYP.	P-2*	P-2*	P-2*	P-2*	C-2	P-2	8'-0"	*T-1 TO 48" A.F.F RE: A2.1 WALL TYPES. SCHLUTER TRIM AT ALL EXPOSED EDGES
104	UNISEX RESTROOM	T-1	B-2	GYP.	P-2*	P-2*	P-2*	P-2*	C-2	P-2	8'-0"	
105	OFFICE	F-2	B-1	GYP.	T-1	T-1	T-1	T-1	C-1	-	9'-0"	
106	BREAK ROOM	F-2	B-1	GYP.	P-2	P-2	P-2	P-2	C-1	-	9'-0"	
107	FIRE RISER	F-1	-	CMU	P-2	P-2	P-2	P-2	-	-	O.T.S.	
108	VENDING	F-1	-	CMU	P-2	P-2	P-2	P-2	-	-	O.T.S.	
109	VACUUM ROOM	F-1	-	CMU	P-2	P-2	P-2	P-2	-	-	O.T.S.	
110	ELECTRICAL ROOM	F-1	-	CMU	P-2	P-2	P-2	P-2	-	-	O.T.S.	

MATERIALS & FINISHES

FLOORING

CALL OUT	MATERIAL
F-1	CONCRETE, BROOM FINISH
F-2	SEALED CONCRETE

TILE

CALL OUT	MATERIAL
T-1	DALTILE AFFINITY, COLOR: AF02 BEIGE 12x24 FLOOR TILE BRICK PATTERN @ FLOORS 12X12 STACKED PATTERN @ WALLS

BASE

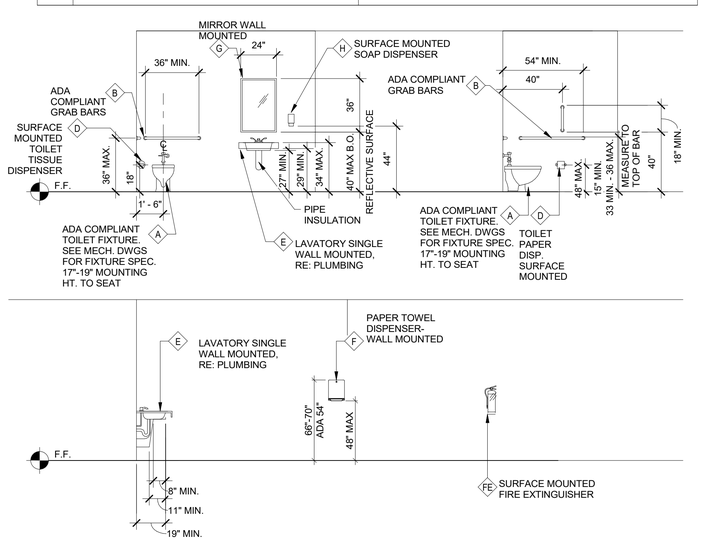
CALL OUT	MATERIAL
B-1	4" VINYL BASE, G.C. TO VERIFY COLOR WITH OWNER
B-2	COVED CERAMIC TILE, G.C. TO VERIFY MANUFACTURER & COLOR WITH OWNER

PAINT

CALL OUT	MATERIAL
P-1	WHITE EPOXY PAINT
P-2	SHERWIN WILLIAMS PROMAR 400 SEMI GLOSS, COLOR: 6107 NOMADIC DESERT

CEILING

CALL OUT	MATERIAL
C-1	2X4 CEILING GRID
C-2	GYP. BRD. PAINTED, COLOR PER OWNER



NOTE: PROVIDE SOLID BLOCKING OR OTHER SUITABLE BACKING AT LOCATIONS INCLUDING, BUT NOT LIMITED TO, THE FOLLOWING: EDGES WHERE FINISH MATERIALS CHANGE, GRAB BARS, TOILET PARTITIONS, DOOR STOPS, SHELF BRACKETS, HANDRAILS AND ALL MOUNTED EQUIPMENT, INCLUDING EQUIPMENT FURNISHED BY OWNER. EXTEND BACKING 6" BEYOND OUTLINE OF EQUIPMENT.

8 FIXTURE MOUNTING HEIGHTS
1/4" = 1'-0"

4 DOOR HARDWARE

HARDWARE SET NO. 1: TUNNEL DOOR

3 EA NON FERROUS HINGE	MPB91 630 MCKINNEY
1 EA PASSAGE SET	93K 0N 15D 630 BEST
1 EA CLOSER	1450 RW/PA 689 LCN
1 EA WALL STOP	409 US32D 630 ROCKWOOD
1 EA KICKPLATE	K1050 10" X 2" CSK BEV 630 ROCKWOOD
3 EA SILENCERS	608-RKW GREY ROCKWOOD
1 EA GASKETING	S44BL PEMKO
1 EA THRESHOLD	

HARDWARE SET NO. 2: RESTROOM

3 EA HINGE	MPB91 630 MCKINNEY
1 EA INDICATOR PRIVACY LOCK	45HLT15VIT 630 BEST
1 EA WALL STOP	409 630 ROCKWOOD
3 EA SILENCERS	608-RKW GREY ROCKWOOD
1 EA UNISEX SIGN	
1 EA GASKETING	S44BL PEMKO
1 EA THRESHOLD	

HARDWARE SET NO. 3: NOT USED

HARDWARE SET NO. 4: NOT USED

HARDWARE SET NO. 5: DBL. DOORS

8 EA HINGE	MPB91 691 MCKINNEY
1 EA LOCKSET*	45H 7AB 15D 630BEST
1 EA SURFACE CLOSER	4050 SCUSH 689 LCN
1 EA OVERHEAD STOP	OH 900 SERIES 630 ROCKWOOD
1 EA WALLSTOP	409 630 ROCKWOOD
2 EA KICKPLATE	K1050 10" CSK BEV 630 ROCKWOOD
1 EA WEATHERSTRIP	303AV 96X96X96PEMKO
2 EA SWEEP	315CN 48 PEMKO
1 EA THRESHOLD	271A 96 PEMKO
1 EA ASTRAGAL	357C 96 PEMKO
1 EA SECURITY PLATE AT LATCH	

HARDWARE SET NO. 6: OFFICE

3 EA HINGE	MPB91 630 MCKINNEY
1 EA OFFICE LOCK*	93K7AB 15D 630 BEST
1 EA WALL STOP	409 630 ROCKWOOD
3 EA SILENCERS	608-RKW GREY ROCKWOOD
1 EA KICK PLATE	
1 EA SECURITY PLATE AT LATCH	
1 EA WEATHER STRIP	
1 EA THRESHOLD	
1 EA SWEEP	

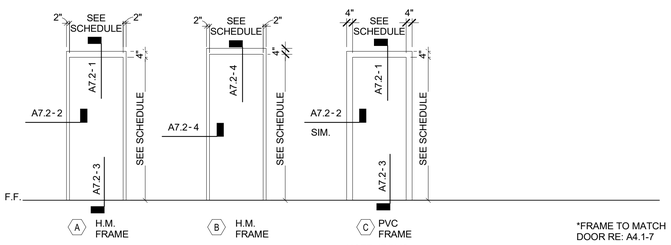
NOTES:

1. LOCKS AND LATCHES SHALL COMPLY WITH IBC SECTION 1010 AND ICC A117.1-2009 FOR GRASPABILITY REQUIREMENTS.
2. * AT LOCKS DENOTED WITH AN *, PROVIDE SECURITY PLATE AT LATCH, ROCKWOOD 320-RKW x 630

3 DOOR SCHEDULE (XXX)
RE: A73 FOR HEADER AND JAMB DETAILS

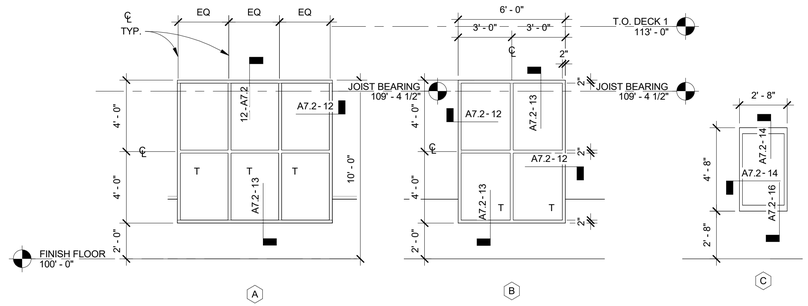
	DOOR TYPE	DOOR SIZE			FRAME	DOOR HARDWARE GROUP	NOTES / REMARKS
		WIDTH	HEIGHT	THICKNESS			
101A	E	16'-0"	10'-0"	MANUF.	MANUF.	MANUF.	MOTORIZED
101B	E	12'-0"	10'-0"	MANUF.	MANUF.	MANUF.	MOTORIZED
102A	C	3'-0"	7'-0"	1-3/4"	C	1	RE: A2.1 FOR DOOR SWING
102B	B	7'-8"	7'-0"	1-3/4"	A	5	RE: A2.1 FOR DOOR SWING
103	A	3'-0"	7'-0"	1-3/4"	A	2	RE: A2.1 FOR DOOR SWING, INSULATED U.36
104	A	3'-0"	7'-0"	1-3/4"	A	2	RE: A2.1 FOR DOOR SWING, INSULATED U.36
105	F (SIM)	3'-0"	7'-0"	1-3/4"	B	6	RE: A2.1 FOR DOOR SWING, H.M. NON-INSULATED
106B	C	3'-0"	7'-0"	1-3/4"	C	1	RE: A2.1 FOR DOOR SWING
106A	A	3'-0"	7'-0"	1-3/4"	A	6	RE: A2.1 FOR DOOR SWING, INSULATED U.36
108	D	7'-4"	7'-4"	1-3/4"	MANUF.	MANUF.	-
109	A	6'-0"	7'-0"	1-3/4"	A	5	RE: A2.1 FOR DOOR SWING
110	A	3'-0"	7'-0"	1-3/4"	A	6	RE: A2.1 FOR DOOR SWING

5 DOOR FRAMES

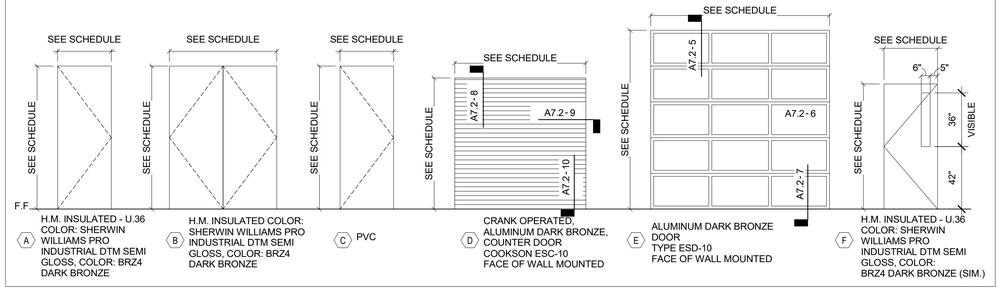


6 WINDOW TYPES

NOTES:
"T" DENOTES TEMPERING AT GLASS PER IBC 2406.4 HAZARDOUS LOCATIONS.
"S" DENOTES SECURITY AT GLASS
PROVIDE SOLARBAN 90 (BY VITRO ARCHITECTURAL GLASS) OR EQUAL
ALL DIMENSIONS ARE MEASURED TO THE ROUGH OPENING AND SHALL BE FIELD VERIFIED PRIOR TO FABRICATION



7 DOOR TYPES

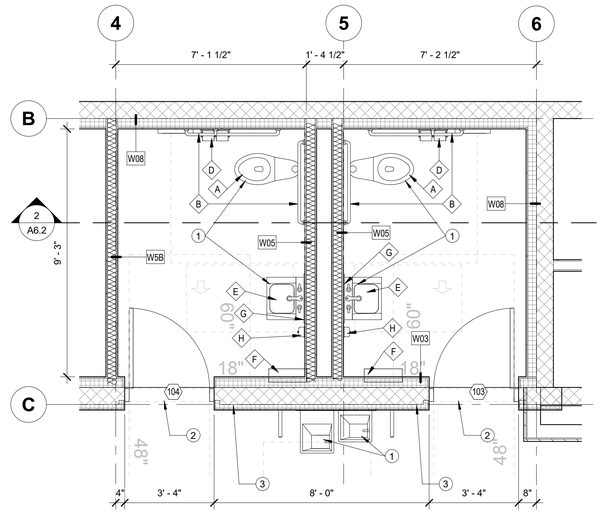


2 FIXTURE SCHEDULE

TAG	ITEM	MANUFACTURER	
A	HC ACCESSIBLE WATER CLOSET	-	RE: PLUMBING
B	STAINLESS STEEL GRAB BARS	BOBRICK	B-5806
C	-	-	-
D	TOILET PAPER DISPENSER	BOBRICK	B-2840
E	RESTROOM LAVATORY	-	RE: PLUMBING
F	PAPER TOWEL DISPENSER	BOBRICK	B-3699
G	MIRROR	BOBRICK	B-165
H	SOAP DISPENSER	BOBRICK	B-2111
I	-	-	-
J	-	-	-
FE	FIRE EXTINGUISHER	-	2A:10B:C
K	-	-	-

SHEET NOTES

1. RESTROOM FIXTURES, RE: PLUMBING DRAWINGS
2. PROVIDE APPROPRIATE ADA TRANSITION STRIP BETWEEN DISSIMILAR FLOORING FINISH
3. RESTROOM SIGN, RE: A4.1-10



NOTE: GC TO VERIFY ALL SIZES OF OWNER PROVIDED EQUIPMENT TO BE SURE SIZE OF SPACE IS ADEQUATE.

1 RESTROOM ENLARGED PLAN
3/8" = 1'-0"

10 RESTROOM SIGN
3" = 1'-0"



NOTE: RESTOOM SIGN TO BE MOUNTED A MINIMUM OF 48" A.F.F FROM THE BASELINE OF THE LOWEST TACTILE CHARACTER AND A MAXIMUM OF 60" A.F.F. FROM THE BASELINE OF THE HIGHEST TACTILE CHARACTER.

STATE OF COLORADO
JESSE GOLDMAN
400744
01-19-2023
LICENSED ARCHITECT

JESSE GOLDMAN, ARCHITECT
2696 S COLORADO BLVD, SUITE 525
DENVER, CO 80222
(303) 962-9164

THESE DRAWINGS AND SPECIFICATIONS AS INSTRUMENTS OF SERVICE ARE AND SHALL REMAIN THE PROPERTY OF THE ARCHITECT. ENGINEER WHETHER THE PROJECT FOR WHICH THEY ARE MADE IS EXECUTED OR NOT. THESE DRAWINGS AND SPECIFICATIONS ARE NOT TO BE USED BY ANY PERSON OR ENTITY ON OTHER PROJECTS, FOR ADDITIONS TO THIS PROJECT, OR FOR COMPLETION OF THIS PROJECT BY OTHERS UNLESS SPECIFICALLY AUTHORIZED IN WRITING BY THE ARCHITECT. THE RIGHTS OF THE ARCHITECT ARE PROTECTED BY STATUTE.
Copyright © 2023

QUICK N CLEAN CAR WASH
PARKER, CO

PARKER RD. & PINE LANE AVE.
2696 S COLORADO BLVD, SUITE 525
DENVER, CO 80222
(303) 962-9164
www.cshqa.com

CSHQA

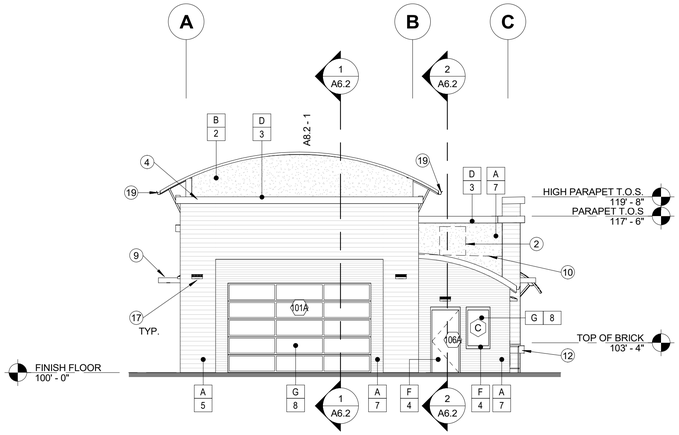
PROJECT	DATE
20037.000	1-19-2023
DRAWN	CHECKED
RJ	WRS

REVISED

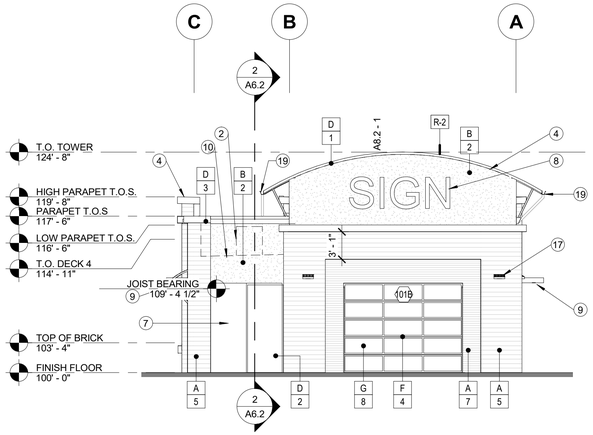
SHEET TITLE: ENLARGED PLANS & SCHEDULES

SHEET
A4.1
ORIGINAL SHEET SIZE 24" x 36"

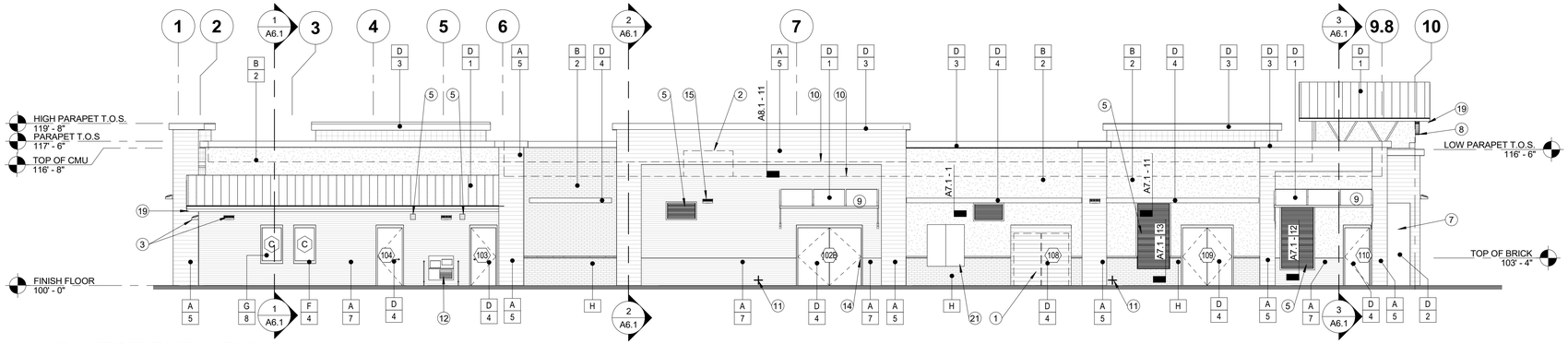
1/19/2023 12:24:14 PM



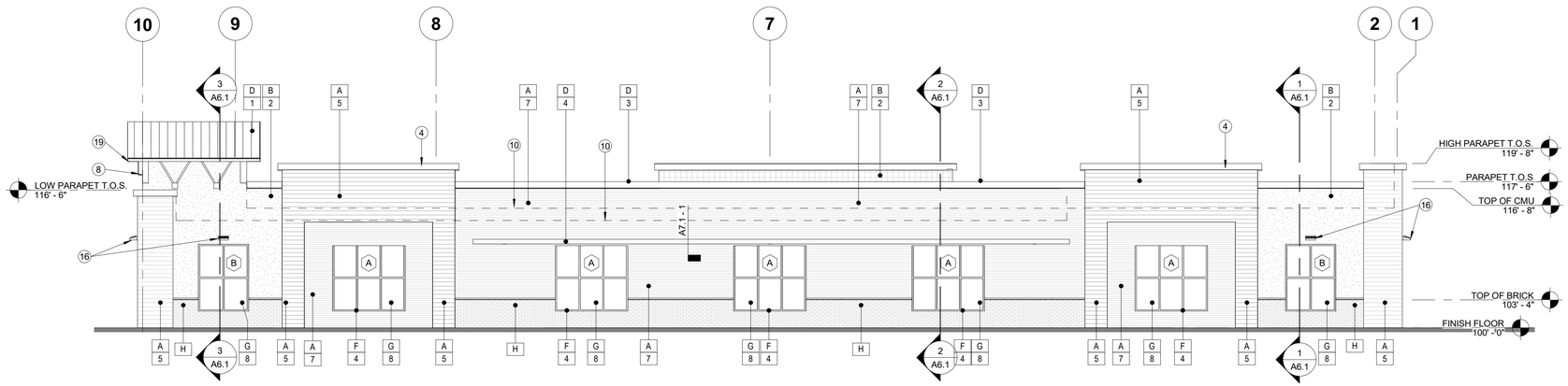
2 NORTH ELEVATION
1/8" = 1'-0"



1 SOUTH ELEVATION
1/8" = 1'-0"



3 WEST ELEVATION
1/8" = 1'-0"



4 EAST ELEVATION
1/8" = 1'-0"

1/19/2023 12:24:15 PM

GENERAL NOTES:

A. THE REFERENCE ELEVATION MARKED WITH ◆ REPRESENTS VERTICAL HEIGHTS RELATIVE TO INTERIOR FLOOR DATUM ASSUMED AT 100' -0" RE: CIVIL FOR ACTUAL ELEVATION.

B. ALL MATERIAL SYMBOLS ARE FOR REPRESENTATION ONLY. CONTRACTOR IS RESPONSIBLE FOR DETERMINING PROPER COURSING, ETC.

C. LOCATION FOR ADDRESS SIGNAGE TO BE INSTALLED AS REQUIRED AND APPROVED BY THE CITY OF RIVERSIDE, CA.

D. ALL COPING WILL EITHER MATCH A COMPLEMENTARY TRIM OR ACCENT COLOR, OR MATCH THE SURROUNDING PREDOMINATE COLOR TO BLEND. GC TO REQUEST COPY OF THE COLOR ELEVATIONS FROM ARCHITECT IF NOT PROVIDED BY OWNER.

E. ALL ROOFTOP EQUIPMENT TO BE SCREENED BY WALLS OR EQUIPMENT SCREENS.

F. GC TO CONFIRM EXTERIOR MATERIALS AND FINISHES WITH OWNER.

MATERIAL LEGEND:

A	HARDIE BOARD SIDING
B	STUCCO OVER 8"x16" CMU
C	SINGLE-PLY MEMBRANE ROOFING WITH SURFACE APPLIED RIBBING FOR STANDING SEAM APPEARANCE. COLOR OF MEMBRANE AND RIBBING TO MATCH DARK BRONZE OR SIMILAR. VERIFY FINAL COLOR WITH OWNER.
D	METAL
E	METAL AWNING
F	ALUMINUM WINDOW FRAME
G	CLEAR GLAZING
H	BRICK VENEER

COLOR LEGEND:

1	PAINT, BENJAMIN MOORE - RUBY RED 2001-01
2	PAINT, SHERWIN WILLIAMS - ACCESSIBLE BEIGE 7036
3	PAINT, SHERWIN WILLIAMS - CITY SCAPE 7067
4	PAINT, SHERWIN WILLIAMS - CAVIAR 6990
5	FINISH, HARDIE BOARD SIDING - KAHKI BROWN
6	FINISH, GENERAL SHALE - PEPPERMILL
7	FINISH, HARDIE BOARD SIDING - NIGHT GREY
8	FINISH, VITRO GLASS SOLARBAN 70XL - CLEAR GLASS

SHEET NOTES:

1. VENDING MACHINE BEYOND, OWNER FURNISHED AND OWNER INSTALLED. G.C. TO VERIFY SIZE OF EQUIPMENT WITH OWNER PRIOR TO CONSTRUCTING OPENING.
2. SCREENED MECHANICAL EQUIPMENT, C/W MECHANICAL DRAWINGS. RE: WALL SECTION
3. EXTERIOR LIGHT FIXTURE, MOUNT BOTTOM OF FIXTURE AT 8'-0" A.F.F., RE: ELECTRICAL.
4. METAL FLASHING/COPING, RE: COPING DETAILS, G.C TO VERIFY FINAL PAINT COLOR WITH OWNER.
5. MECHANICAL LOUVER, C/W MECHANICAL DRAWINGS. GC TO PREVIEW WITH CARWASH EQUIPMENT PROVIDER CLEARANCE IN/OVER LOUVERS. PAINT TO MATCH ADJACENT SURFACE
6. SERVICE SINK, C/W PLUMBING DRAWINGS.
7. ELECTRICAL SERVICE ENTRANCE SECTION (SES), PAINT.
8. SIGN PACKAGE BY OTHERS AND APPROVED UNDER SEPARATE PERMIT. COORDINATE POWER REQUIREMENTS AND BLOCKING IF REQ'D.
9. CANOPY, RE: DETAILS
10. HIDDEN LINE OF ROOF BEYOND.
11. ROOF OVERFLOW DRAIN DISCHARGE, RE: A7.3 - 11 & 12 AND PLUMBING.
12. HI-LO DRINKING FOUNTAINS RE: PLUMBING AND DETAILS A7.1-16.
13. PAINTED LOGO, COORDINATE SPECIFICS WITH OWNER.
14. KNOX BOX - INSTALL IN LOCATION DIRECTED BY FIRE DEPARTMENT.
15. CONTROL JOINT. SPACE EQUALLY WITHIN BAYS, ALIGN WITH PILASTERS, AND/OR ALIGN WITH OPENINGS.
16. EXTERIOR LIGHT FIXTURE, MOUNT BOTTOM OF FIXTURE AT 10'-6" A.F.F., RE: ELECTRICAL.
17. EXTERIOR LIGHT FIXTURE, MOUNT BOTTOM OF FIXTURE AT 9'-6" A.F.F., RE: ELECTRICAL.
18. EXTERIOR LIGHT FIXTURE, MOUNT BOTTOM OF FIXTURE AT 7'-8" A.F.F., RE: ELECTRICAL.
19. GUTTER AND DOWNSPOUT.
20. BREAK METAL, RE: DETAILS. MATCH COLOR AND FINISH OF ADJACENT METAL PANEL.
21. ELECTRICAL PANELS RE: ELECTRICAL

STATE OF COLORADO
JESSE GOLDMAN
400744
01-19-2023
LICENSED ARCHITECT

JESSE GOLDMAN, ARCHITECT
2696 S COLORADO BLVD. SUITE 525
DENVER, CO 80222
(303) 962-9164

THESE DRAWINGS AND SPECIFICATIONS AS INSTRUMENTS OF SERVICE ARE AND SHALL REMAIN THE PROPERTY OF THE ARCHITECT. ENGINEER WHETHER THE PROJECT FOR WHICH THEY ARE MADE IS EXECUTED OR NOT. THESE DRAWINGS AND SPECIFICATIONS SHALL NOT BE USED BY ANY PERSON OR ENTITY ON OTHER PROJECTS WITHOUT THE EXPRESS WRITTEN CONSENT OF THE COMPLETION OF THIS PROJECT WHEN PHASED WITHOUT THE EXPRESS WRITTEN CONSENT OF THE ARCHITECT.
Copyright © 2023

QUICK N CLEAN CAR WASH
PARKER RD. & PINE LANE AVE.
PARKER, CO

2696 S COLORADO BLVD, SUITE 525
DENVER, CO 80222
(303) 962-9164
www.cshqa.com

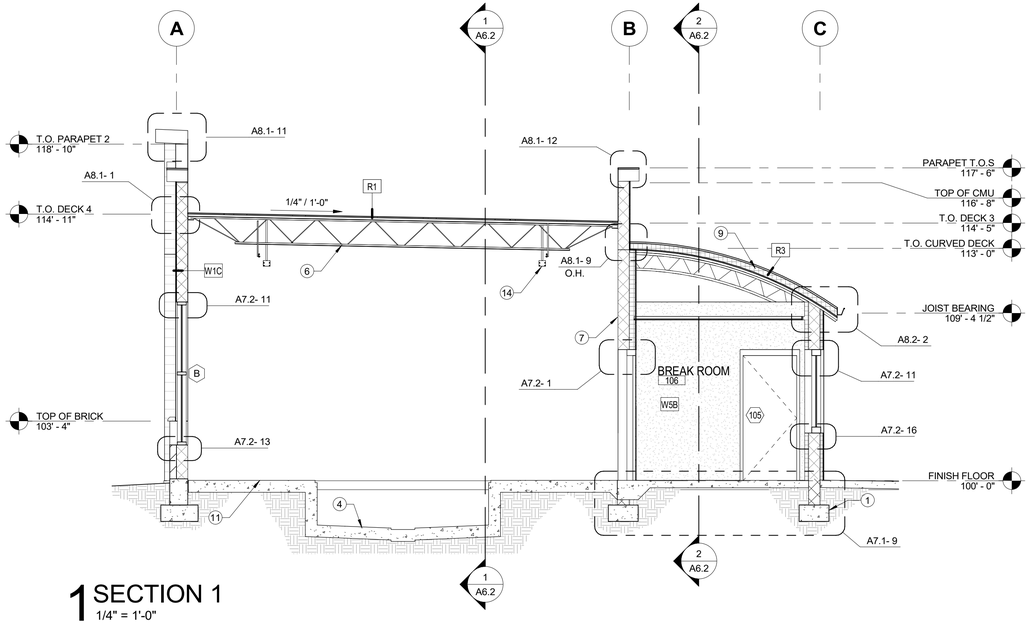
CSHQA

PROJECT	DATE
20037.000	1-19-2023
DRAWN	CHECKED
RJ	WRS

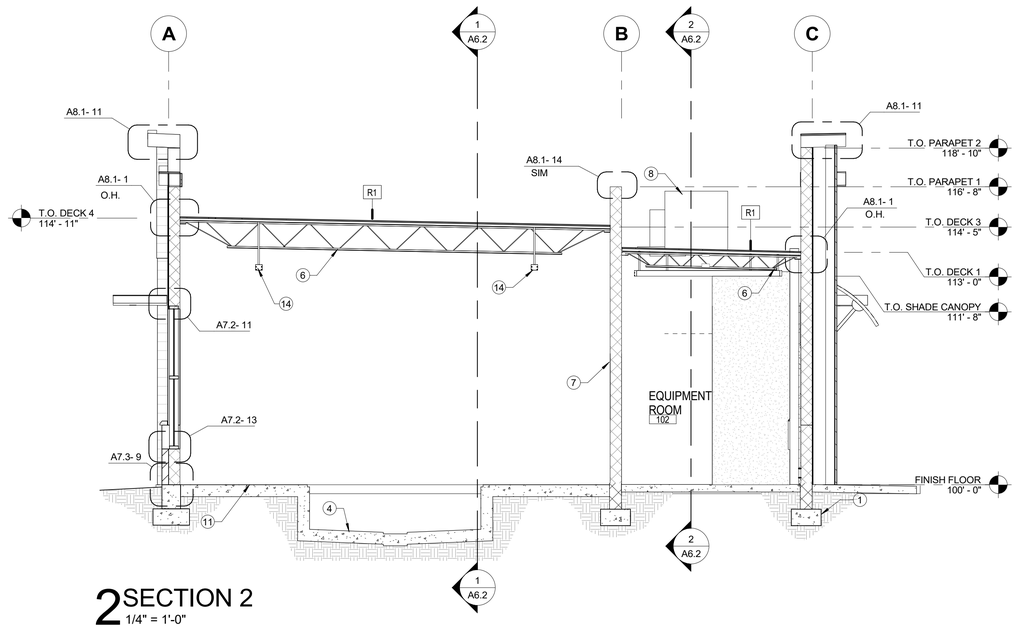
REVISED

SHEET TITLE
EXTERIOR ELEVATIONS

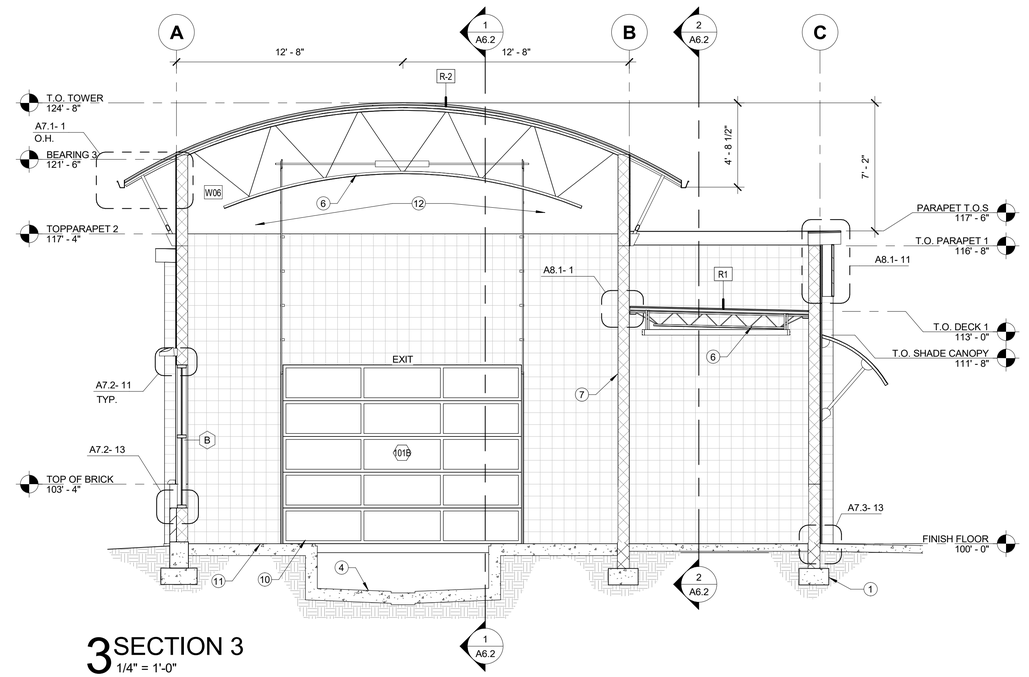
SHEET
A5.1
ORIGINAL SHEET SIZE
24" x 36"



1 SECTION 1
1/4" = 1'-0"



2 SECTION 2
1/4" = 1'-0"



3 SECTION 3
1/4" = 1'-0"

SHEET NOTES:

1. FOUNDATION, RE: STRUCTURAL DRAWINGS.
2. STOREFRONT, RE: A4.1-6 AND A7.3-3
3. STEEL TRUSSES, RE: STRUCTURAL DRAWINGS.
4. CONCRETE CONVEYOR TRENCH, RE: STRUCT AND CARWASH EQUIPMENT PLANS.
5. MECHANICAL ROOF TOP EQUIPMENT SCREENING WALL.
6. STEEL JOIST OR BEAM, RE: STRUCTURAL DRAWINGS.
7. CMU WALL, RE: STRUCTURAL DRAWINGS.
8. MECHANICAL EQUIPMENT, RE: A8.1-8 AND MECHANICAL DRAWINGS.
9. ROOF INSULATION PER ROOF ASSEMBLY TYPE.
10. SECTIONAL DOOR, RE: A4.1-3 &7.
11. FINISHED FLOOR HEIGHT (T.O.C.) VARRIES WITHIN WASH TUNNEL, RE: CAR WASH DRAWINGS.
12. FRP OVER METAL STUDS.
13. S.E.S. CABINET
14. LIGHT FIXTURE, RE: ELECTRICAL DRAWINGS.

STATE OF COLORADO
JESSE GOLDMAN
400744
01-19-2023
LICENSED ARCHITECT

JESSE GOLDMAN, ARCHITECT
2696 S COLORADO BLVD, SUITE 525
DENVER, CO 80222
(303) 962-9164

THESE DRAWINGS AND SPECIFICATIONS AS INSTRUMENTS OF SERVICE ARE AND SHALL REMAIN THE PROPERTY OF THE ARCHITECT. ENGINEER WHETHER THE PROJECT FOR WHICH THEY ARE MADE IS EXECUTED OR NOT. THESE DRAWINGS AND SPECIFICATIONS ARE NOT TO BE USED BY ANY PERSON OR ENTITY ON OTHER PROJECTS, FOR ADDITIONS TO THIS PROJECT, OR FOR COMPLETION OF THIS PROJECT WHEN PHASED WITHOUT THE WRITTEN CONSENT OF THE ARCHITECT. ALL RIGHTS RESERVED.
Copyright © 2023

QUICK N CLEAN CAR WASH

PARKER RD. & PINE LANE AVE.
PARKER, CO

CSHQA
2696 S COLORADO BLVD, SUITE 525
DENVER, CO 80222
(303) 962-9164
www.cshqa.com

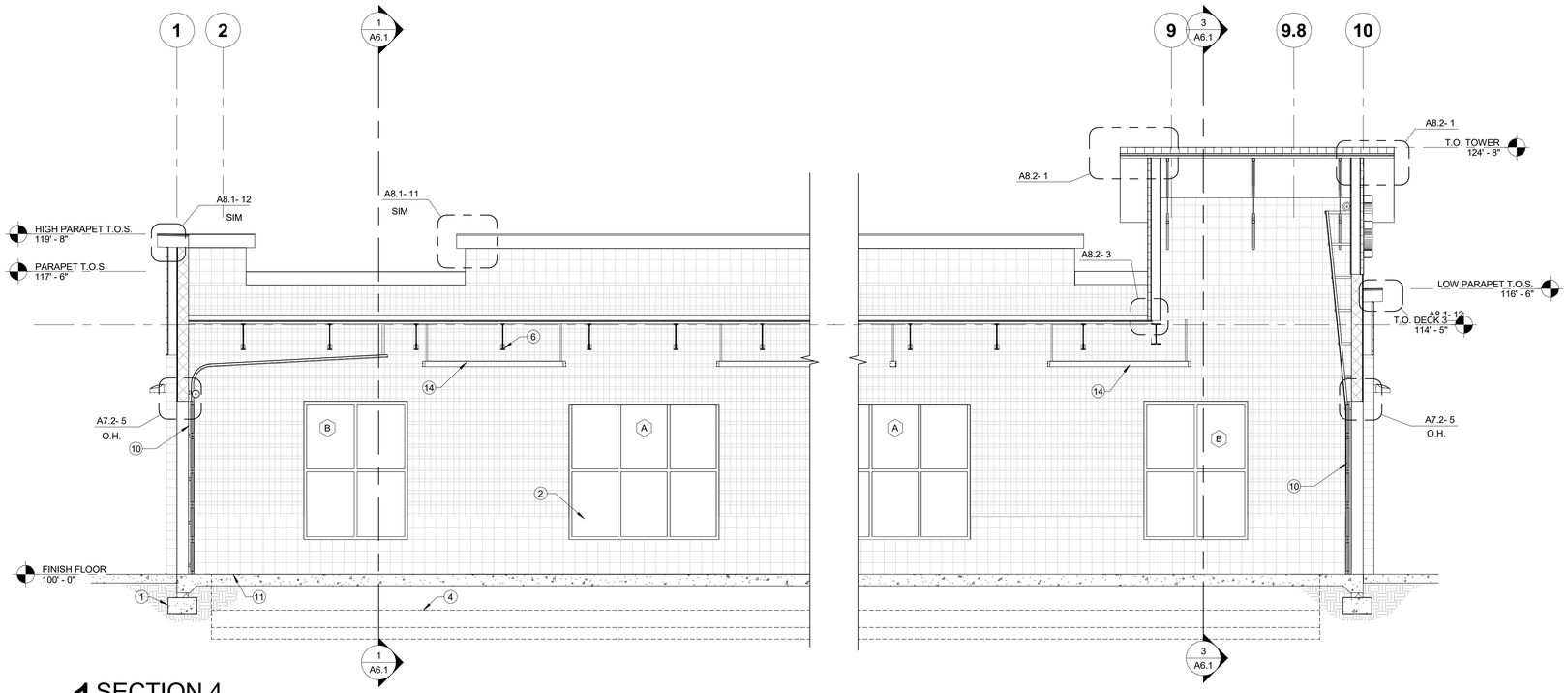
PROJECT	DATE
20037.000	1-19-2023
DRAWN	CHECKED
EAP	WRS

REVISED

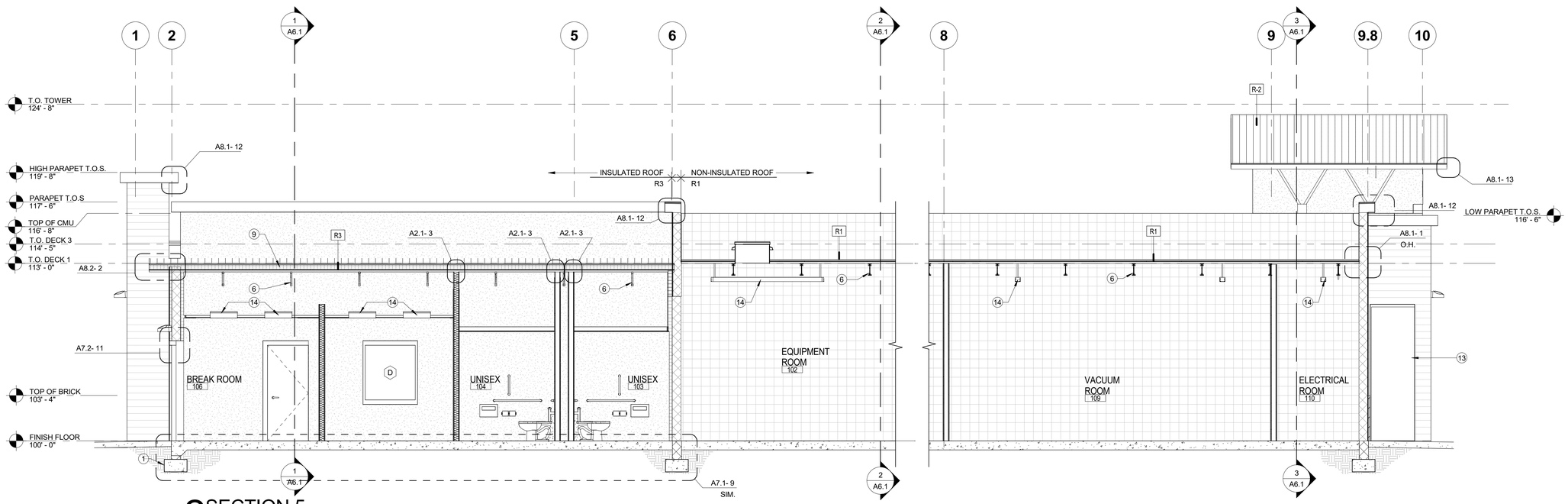
SHEET TITLE
BUILDING SECTIONS

SHEET
A6.1
ORIGINAL SHEET SIZE
24" x 36"

1/19/2023 12:24:16 PM



1 SECTION 4
1/4" = 1'-0"



2 SECTION 5
1/4" = 1'-0"

SHEET NOTES:

1. FOUNDATION, RE: STRUCTURAL DRAWINGS.
2. STOREFRONT, RE: A4.1-6 AND A7.3-3
3. STEEL TRUSSES, RE: STRUCTURAL DRAWINGS.
4. CONCRETE CONVEYOR TRENCH, RE: STRUCT AND CARWASH EQUIPMENT PLANS.
5. MECHANICAL ROOF TOP EQUIPMENT SCREENING WALL.
6. STEEL JOIST OR BEAM, RE: STRUCTURAL DRAWINGS.
7. CMU WALL, RE: STRUCTURAL DRAWINGS.
8. MECHANICAL EQUIPMENT, RE: A8.1-8 AND MECHANICAL DRAWINGS.
9. ROOF INSULATION PER ROOF ASSEMBLY TYPE.
10. SECTIONAL DOOR, RE: A4.1-3 &7.
11. FINISHED FLOOR HEIGHT (T.O.C.) VARRIES WITHIN WASH TUNNEL, RE: CAR WASH DRAWINGS.
12. FRP OVER METAL STUDS.
13. S.E.S. CABINET
14. LIGHT FIXTURE, RE: ELECTRICAL DRAWINGS.

STATE OF COLORADO
JESSE GOLDMAN
400744
01-19-2023
LICENSED ARCHITECT

JESSE GOLDMAN, ARCHITECT
2696 S COLORADO BLVD, SUITE 525
DENVER, CO 80222
(303) 962-9164

THESE DRAWINGS AND SPECIFICATIONS AS INSTRUMENTS OF SERVICE ARE AND SHALL REMAIN THE PROPERTY OF THE ARCHITECT. ENGINEER WHETHER THE PROJECT FOR WHICH THEY ARE MADE IS EXECUTED OR NOT. THESE DRAWINGS AND SPECIFICATIONS ARE NOT TO BE USED BY ANY PERSON OR ENTITY ON OTHER PROJECTS, FOR ADDITIONS TO THIS PROJECT, OR FOR COMPLETION OF THIS PROJECT BY OTHERS WITHOUT THE EXPRESS WRITTEN PERMISSION OF THE ARCHITECT. ALL COMMON LAW, STATUTORY AND OTHER RESERVED RIGHTS, INCLUDING COPYRIGHT, ARE HEREBY RESERVED.
Copyright © 2023

QUICK N CLEAN CAR WASH

PARKER, CO

2696 S COLORADO BLVD, SUITE 525

PARKER RD. & PINE LANE AVE.

DENVER, CO 80222
(303) 962-9164
www.cshqa.com

CSHQA

PROJECT	DATE
20037.000	1-19-2023
DRAWN	CHECKED
RJ	WRS

REVISED

SHEET TITLE

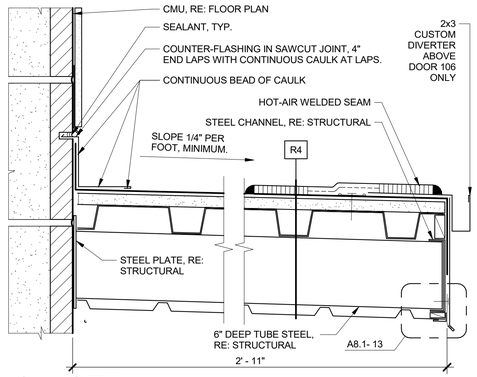
BUILDING SECTIONS

SHEET

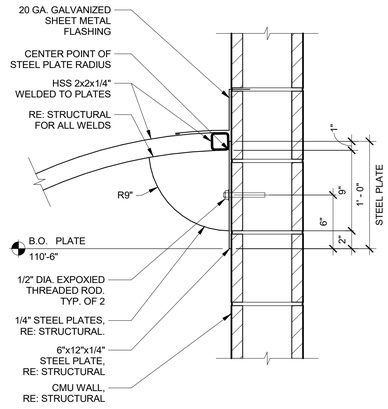
A6.2

ORIGINAL SHEET SIZE
24" x 36"

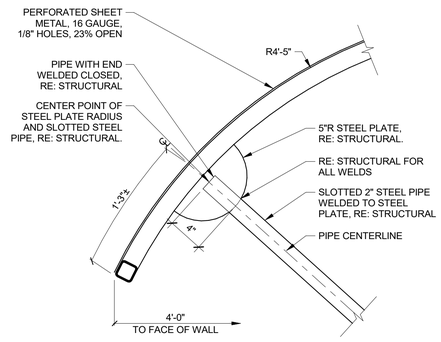
1/19/2023 12:24:16 PM



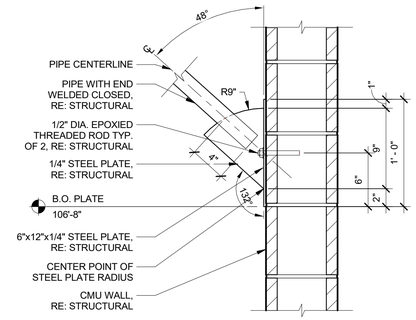
1 CANOPY
3" = 1'-0"



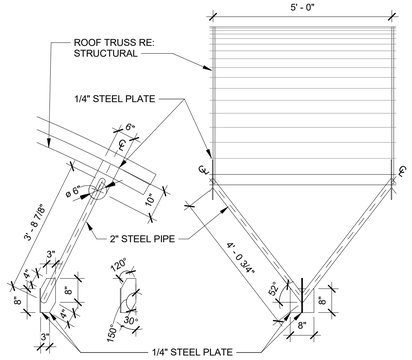
2 CANOPY UPPER BRACE
1 1/2" = 1'-0"



3 CANOPY
1 1/2" = 1'-0"



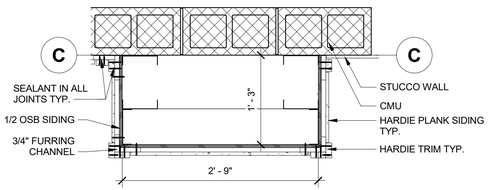
4 CANOPY LOW BRACE
1 1/2" = 1'-0"



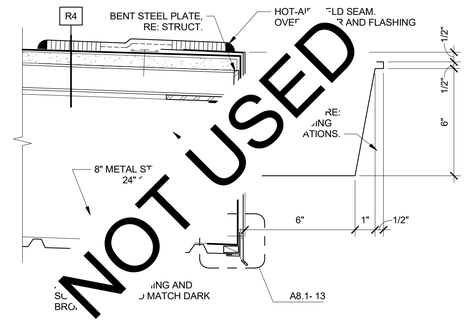
5 SUPPORT BRACKETS
1/2" = 1'-0"



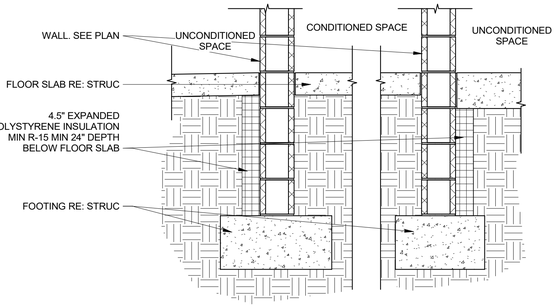
6 EXTERIOR PILLAR #1
1" = 1'-0"



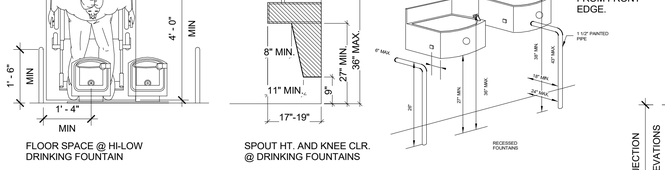
7 EXTERIOR PILLAR #2
1" = 1'-0"



8 GUTTER
3" = 1'-0"



9 UNDERSLAB INSULATION
3/4" = 1'-0"



FLOOR SPACE @ HI-LOW DRINKING FOUNTAIN

SPOUT HT. AND KNEE CLR. @ DRINKING FOUNTAINS

WATER FLOW: THE SPOUT SHALL PROVIDE A FLOW OF WATER 4" HIGH MIN. AND SHALL BE LOCATED 5" MAX. FROM THE FRONT OF THE UNIT.

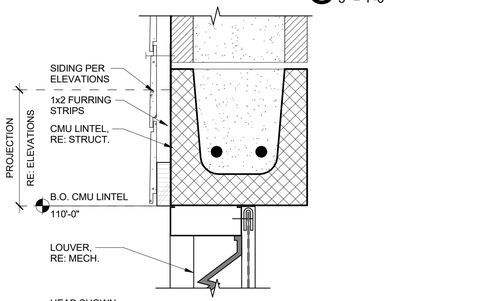
NOTES: ILLUSTRATIONS SHOWN HERE ARE FOR DIMENSIONAL PURPOSES ONLY. A SECOND DRINKING FOUNTAIN SHALL BE PROVIDED AT A MOUNTING HEIGHT SUITABLE TO PERSONS WITH LIMITED PHYSICAL BENDING ABILITY, MAINTAINING MINIMUM CLEARANCES NOTED AND AS REQUIRED.

AT ALCOVES DEEPER THAN 24" AN ADDITIONAL 6"

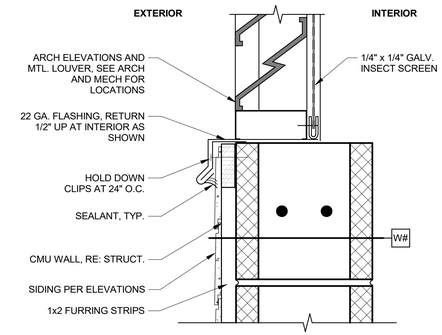
MANEUVERING CLEARANCE IS REQUIRED.

AT "HI-LOW" TYPE FOUNTAINS CENTER THE 30"X48" CLEAR FLOOR SPACE ON THE "LOW" FOUNTAIN FIXTURE

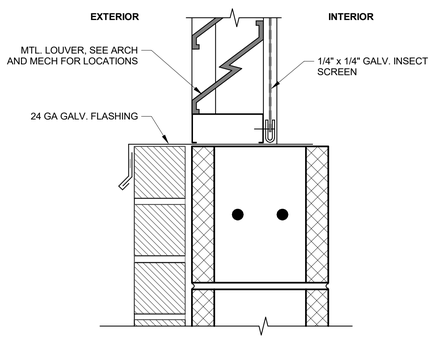
10 DRINKING FOUNTAIN DETAILS
1/2" = 1'-0"



11 LOUVER HEAD AT HARDIE SIDING
3" = 1'-0"



12 LOUVER SILL AT HARDIE SIDING
3" = 1'-0"



13 LOUVER SILL AT BRICK WAINSCOTT
3" = 1'-0"

NOT USED

STATE OF COLORADO
JESSE GOLDMAN
400744
01-19-2023
LICENSED ARCHITECT

JESSE GOLDMAN, ARCHITECT
2696 S COLORADO BLVD, SUITE 525
DENVER, CO 80222
(303) 962-9164

THESE DRAWINGS AND SPECIFICATIONS AS INSTRUMENTS OF SERVICE ARE AND SHALL REMAIN THE PROPERTY OF THE ARCHITECT. ENGINEER WHETHER THE PROJECT FOR WHICH THEY ARE MADE IS EXECUTED OR NOT. THESE DRAWINGS AND SPECIFICATIONS SHALL NOT BE USED BY ANY PERSON OR ENTITY ON OTHER PROJECTS WITHOUT THE EXPRESS WRITTEN CONSENT OF THE COMPANY. THIS PROJECT WHEN PHASED WITHOUT COMPLETION OF THIS PROJECT WILL BE CONSIDERED AS ONE PROJECT FOR PURPOSES OF COPYRIGHT.
Copyright © 2023

QUICK N CLEAN CAR WASH
PARKER RD. & PINE LANE AVE.
PARKER, CO
2696 S COLORADO BLVD, SUITE 525
DENVER, CO 80222
(303) 962-9164
www.cshqa.com

CSHQA

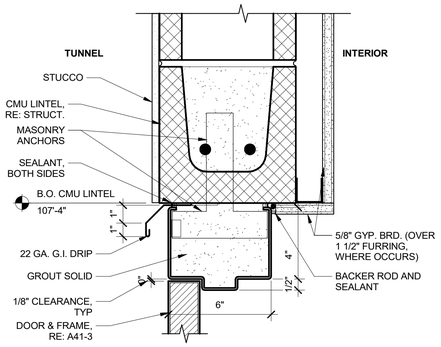
PROJECT	DATE
20037.000	1-19-2023
DRAWN	CHECKED
Author	Checker

REVISED

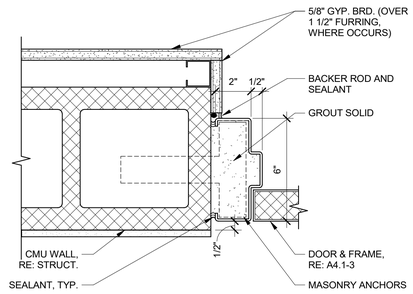
SHEET TITLE
DETAILS

SHEET
A7.1
ORIGINAL SHEET SIZE
24" x 36"

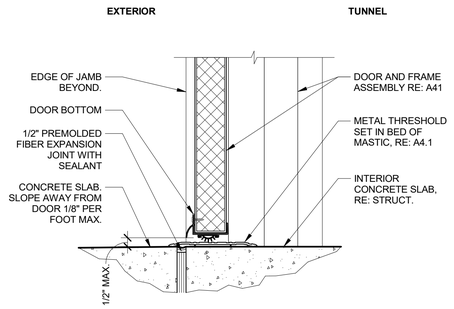
1/19/2023 12:24:17 PM



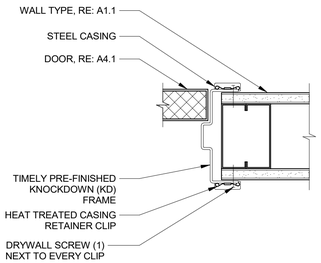
1 H.M. DOOR FRAME - CMU HEAD
3" = 1'-0"



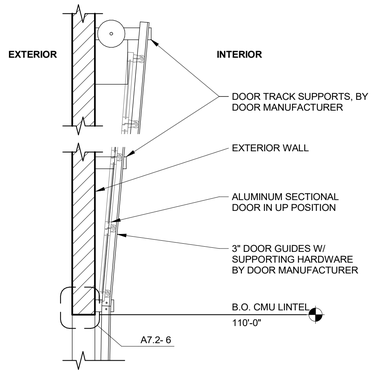
2 H.M. DOOR FRAME - CMU JAMB 1
3" = 1'-0"



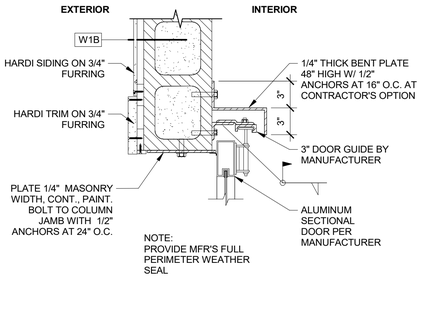
3 H.M. DOOR FRAME - SILL
3" = 1'-0"



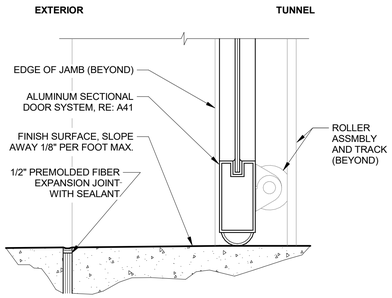
4 H.M. DOOR FRAME - STUD JAMB/HEAD
3" = 1'-0"



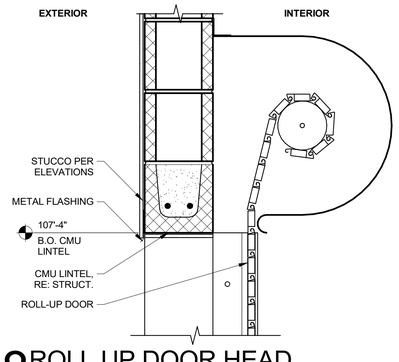
5 SECTIONAL DOOR HEAD
1/2" = 1'-0"



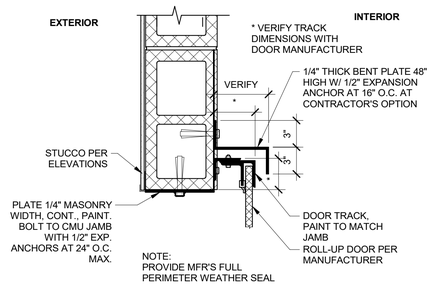
6 SECTIONAL DOOR JAMB
1 1/2" = 1'-0"



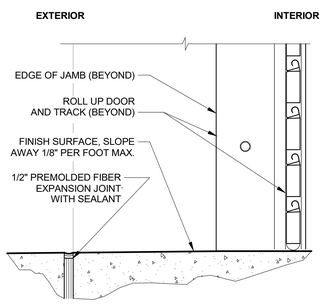
7 SECTIONAL DOOR SILL
3" = 1'-0"



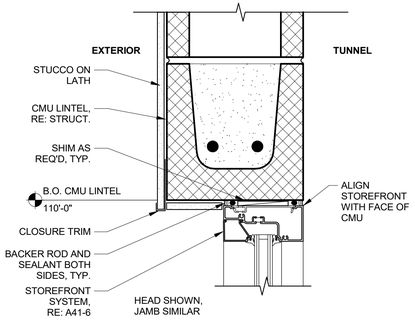
8 ROLL UP DOOR HEAD
1 1/2" = 1'-0"



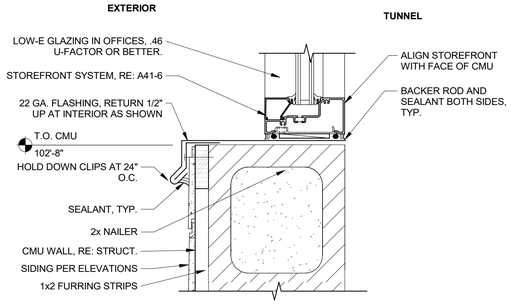
9 ROLL UP DOOR JAMB
1 1/2" = 1'-0"



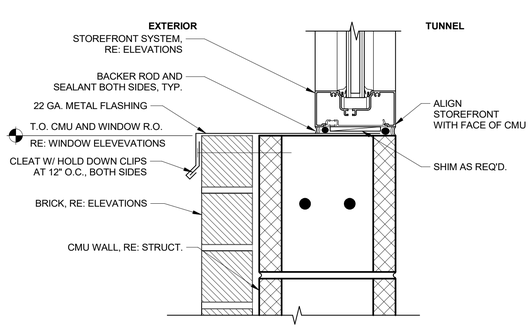
10 ROLL UP DOOR SILL
3" = 1'-0"



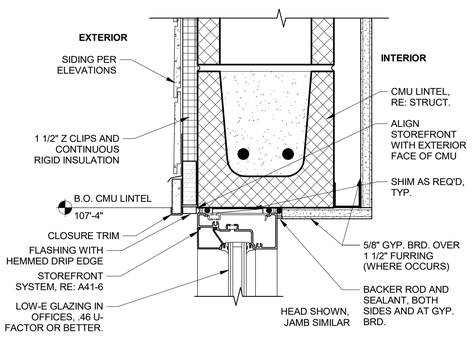
11 STOREFRONT HEAD - JAMB AT TUNNEL
3" = 1'-0"



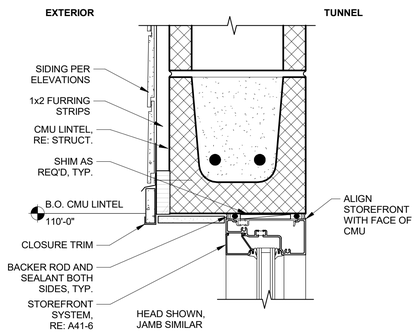
12 STOREFRONT SILL HARDISIDING AT TUNNEL
3" = 1'-0"



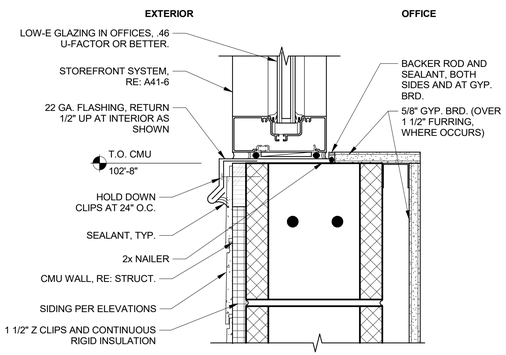
13 STOREFRONT SILL AT BRICK WAINSCOTT
3" = 1'-0"



14 STOREFRONT HEAD - JAMB 2
3" = 1'-0"



15 STOREFRONT HEAD - JAMB HARDISIDING AT TUNNEL
3" = 1'-0"



16 STOREFRONT SILL - HARDISIDING
3" = 1'-0"

1/19/2023 12:24:17 PM

JESSE GOLDMAN, ARCHITECT
2696 S COLORADO BLVD, SUITE 525
DENVER, CO 80222
(303) 962-9164

THESE DRAWINGS AND SPECIFICATIONS AS INSTRUMENTS OF SERVICE ARE AND SHALL REMAIN THE PROPERTY OF THE ARCHITECT. ENGINEER WHETHER THE PROJECT FOR WHICH THEY ARE MADE IS EXECUTED OR NOT. THESE DRAWINGS AND SPECIFICATIONS ARE NOT TO BE USED BY ANY PERSON OR ENTITY ON OTHER PROJECTS, FOR ADDITIONS TO THIS PROJECT, OR FOR COMPLETION OF THIS PROJECT WHEN PHASED WITHOUT THE WRITTEN PERMISSION OF THE ARCHITECT AT COMMENCEMENT OF STATED.
Copyright © 2023

STATE OF COLORADO
JESSE GOLDMAN
400744
01-19-2023
LICENSED ARCHITECT

QUICK N CLEAN CAR WASH
PARKER, CO

2696 S COLORADO BLVD, SUITE 525
DENVER, CO 80222
(303) 962-9164
www.cshqa.com

PARKER RD. & PINE LANE AVE.

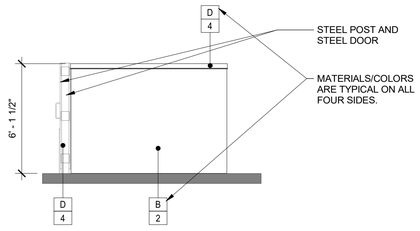
CSHQA

PROJECT	DATE
20037.000	1-19-2023
DRAWN	CHECKED
RJ	WRS

REVISED

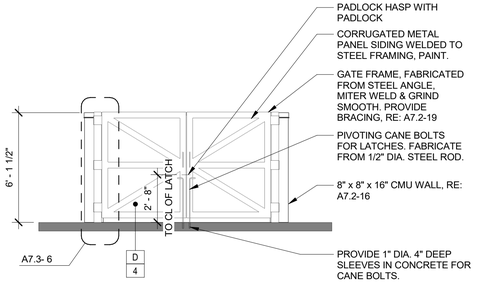
SHEET TITLE
WINDOW/DOOR DETAILS

SHEET
A7.2
ORIGINAL SHEET SIZE
24" x 36"



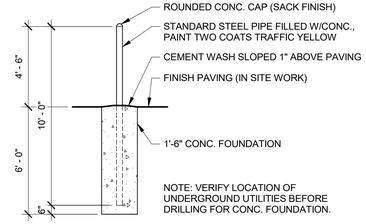
NOTE: RE: A5.1 FOR COLOR / MATERIAL LEGEND

1 TRASH ENCLOSURE SIDE
1/4" = 1'-0"

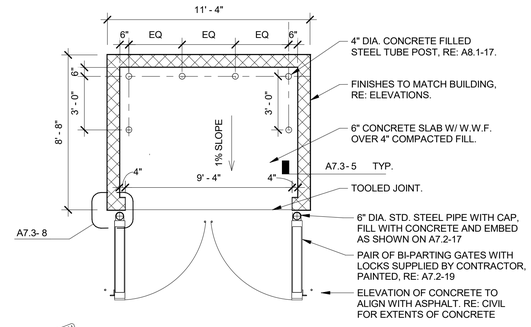


NOTE: RE: A5.1 FOR COLOR / MATERIAL LEGEND

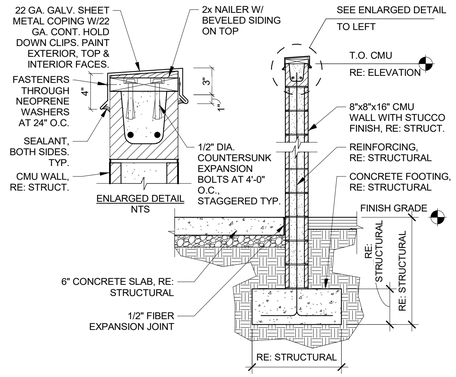
2 TRASH ENCLOSURE FRONT
1/4" = 1'-0"



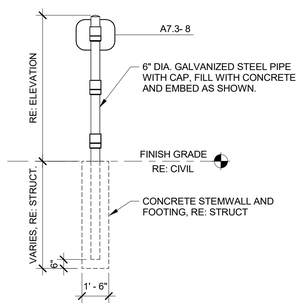
3 PIPE BUMPER
1/4" = 1'-0"



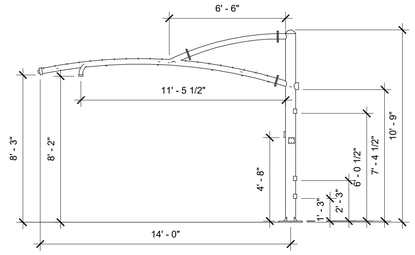
4 TRASH ENCLOSURE PLAN
1/4" = 1'-0"



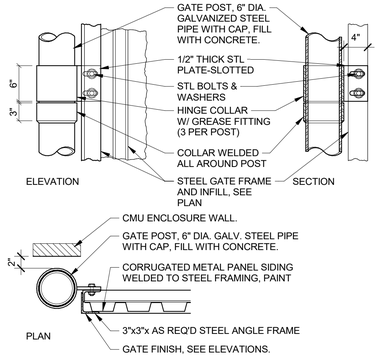
5 TRASH ENCLOSURE SECTION
1/2" = 1'-0"



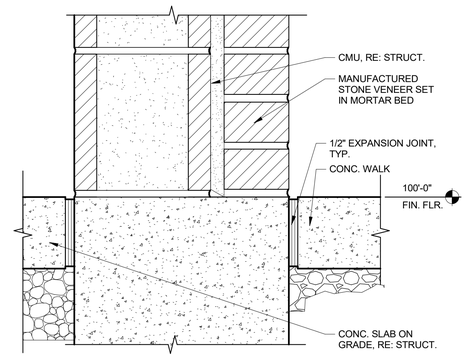
6 GATE POST
1/4" = 1'-0"



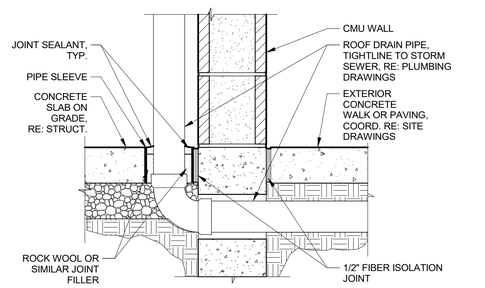
7 TYP. VACUUM STANCHION ELEVATION
NTS



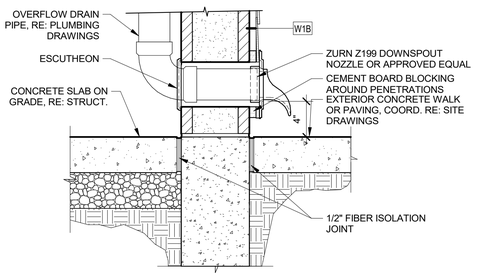
8 GATE DETAILS
1" = 1'-0"



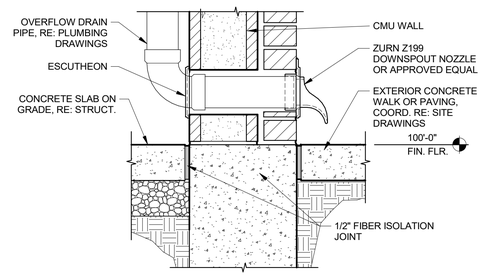
9 BRICK BASE
3" = 1'-0"



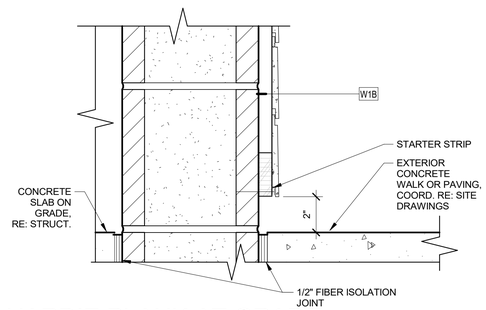
10 ROOF DRAIN
1 1/2" = 1'-0"



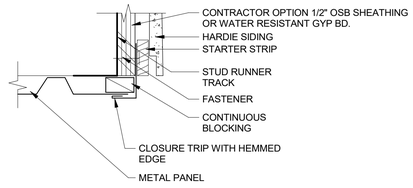
11 OVERFLOW DISCHARGE
1 1/2" = 1'-0"



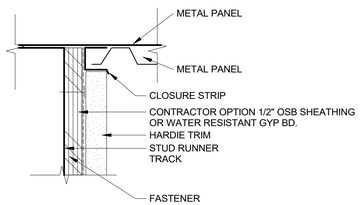
12 OVERFLOW DISCHARGE @ BRICK
1 1/2" = 1'-0"



13 HARDIE PLANK AT GRADE
3" = 1'-0"



14 DRIP EDGE AT HARDIE
6" = 1'-0"



15 INSIDE CORNER
6" = 1'-0"

JESSE GOLDMAN, ARCHITECT
2696 S COLORADO BLVD, SUITE 525
DENVER, CO 80222
(303) 962-9164

THESE DRAWINGS AND SPECIFICATIONS AS INSTRUMENTS OF SERVICE ARE AND SHALL REMAIN THE PROPERTY OF THE ARCHITECT. ENGINEER WHETHER THE PROJECT FOR WHICH THEY ARE MADE IS EXECUTED OR NOT. THESE DRAWINGS AND SPECIFICATIONS ARE NOT TO BE USED BY ANY PERSON OR ENTITY ON OTHER PROJECTS, FOR ADDITIONS TO THIS PROJECT, OR FOR COMPLETION OF THIS PROJECT WHEN PHASED WITHOUT THE WRITTEN CONSENT OF THE ARCHITECT. ALL COMMON LAW, STATUTORY AND OTHER RESERVED RIGHTS, INCLUDING COPYRIGHT, ARE RETAINED BY THE ARCHITECT.
Copyright © 2023

STATE OF COLORADO
JESSE GOLDMAN
400744
01-19-2023
LICENSED ARCHITECT

QUICK N CLEAN CAR WASH
PARKER RD. & PINE LANE AVE.
PARKER, CO

2696 S COLORADO BLVD, SUITE 525
DENVER, CO 80222
(303) 962-9164
www.cshqa.com

CSHQA

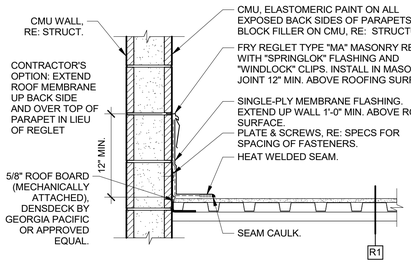
PROJECT	DATE
20037.000	1-19-2023
DRAWN	CHECKED
RJ	WRS

REVISED

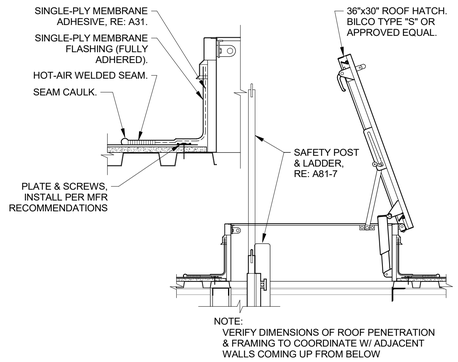
SHEET TITLE
DETAILS

SHEET
A7.3
ORIGINAL SHEET SIZE
24" x 36"

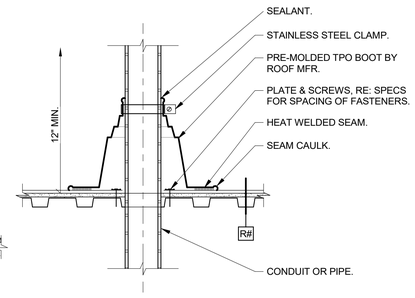
1/19/2023 12:24:18 PM



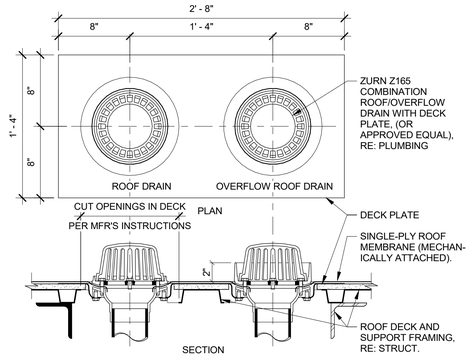
1 COPING, PARAPET & ROOFING
1" = 1'-0"



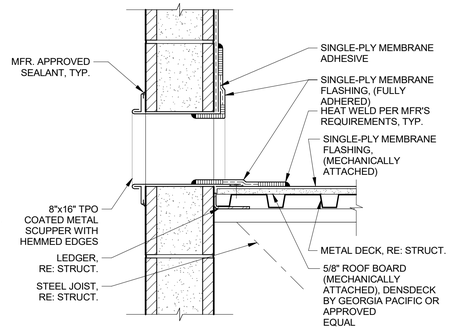
2 ROOF HATCH
3/4" = 1'-0"



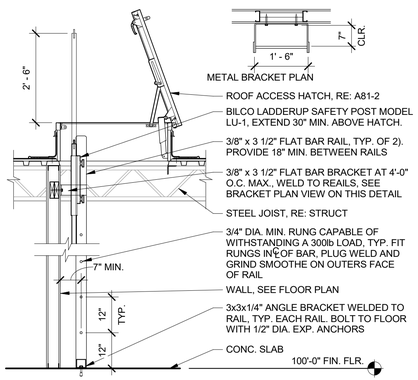
3 ROOF PENETRATION
1" = 1'-0"



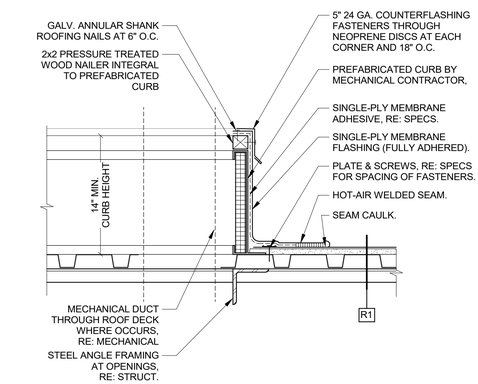
4 ROOF DRAIN / OVERFLOW 1
1 1/2" = 1'-0"



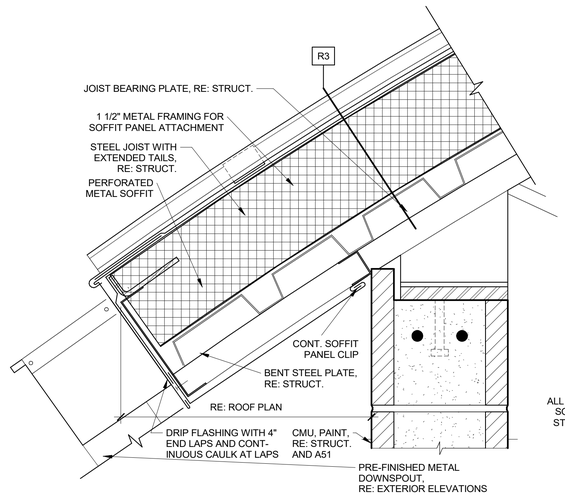
5 ROOF DRAIN / OVERFLOW 2
1 1/2" = 1'-0"



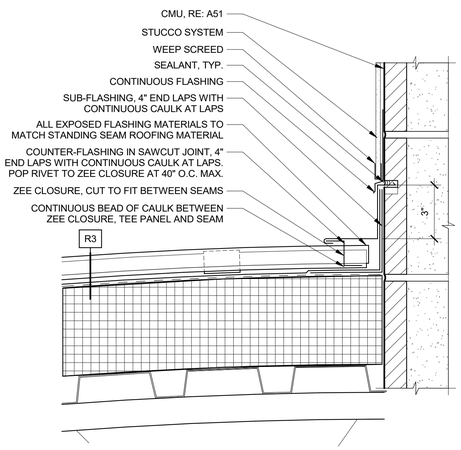
6 ROOF ACCESS LADDER
1/2" = 1'-0"



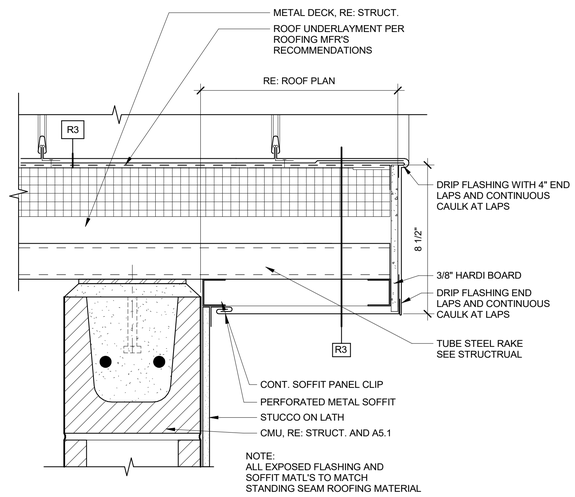
7 PREFABRICATED CURB
1 1/2" = 1'-0"



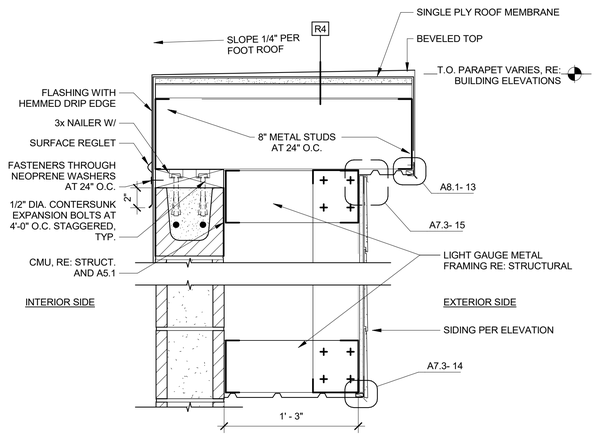
8 ROOF EDGE - INSULATED
3" = 1'-0"



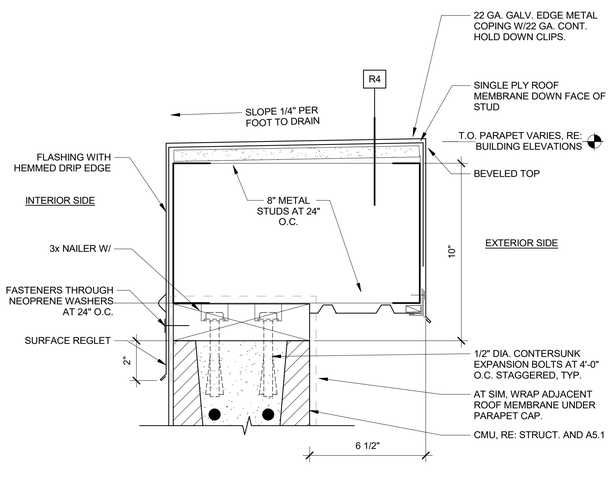
9 VAULTED ROOF TO WALL
3" = 1'-0"



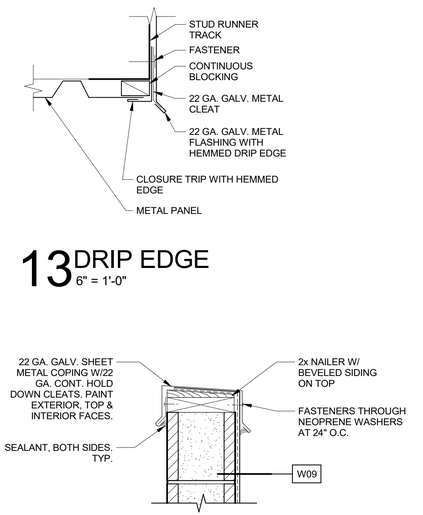
10 VAULTED ROOF RAKE
3" = 1'-0"



11 TALL PARAPET
1 1/2" = 1'-0"



12 PARAPET
3" = 1'-0"



13 DRIP EDGE
6" = 1'-0"

14 CMU SCREEN WALL CAP
1 1/2" = 1'-0"

JESSE GOLDMAN, ARCHITECT
2696 S COLORADO BLVD, SUITE 525
DENVER, CO 80222
(303) 962-9164

THESE DRAWINGS AND SPECIFICATIONS AS INSTRUMENTS OF SERVICE ARE AND SHALL REMAIN THE PROPERTY OF THE ARCHITECT. ENGINEER WHETHER THE PROJECT FOR WHICH THEY ARE MADE IS EXECUTED OR NOT. THESE DRAWINGS AND SPECIFICATIONS ARE NOT TO BE USED BY ANY PERSON OR ENTITY ON OTHER PROJECTS, FOR ADDITIONS TO THIS PROJECT, OR FOR COMPLETION OF THIS PROJECT BY OTHERS UNLESS THE ARCHITECT IS PROVIDED FAIR COMPENSATION AND PERMISSION IS GRANTED BY OTHERS.
Copyright © 2023

STATE OF COLORADO
JESSE GOLDMAN
400744
01-19-2023
LICENSED ARCHITECT

QUICK N CLEAN CAR WASH
PARKER RD. & PINE LANE AVE.
PARKER, CO

2696 S COLORADO BLVD, SUITE 525
DENVER, CO 80222
(303) 962-9164
www.cshqa.com

CSHQA

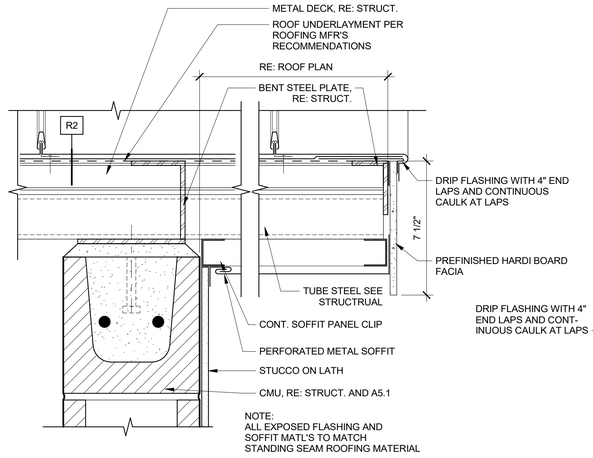
PROJECT	DATE
20037.000	1-19-2023
DRAWN	CHECKED
RJ	WRS

REVISED

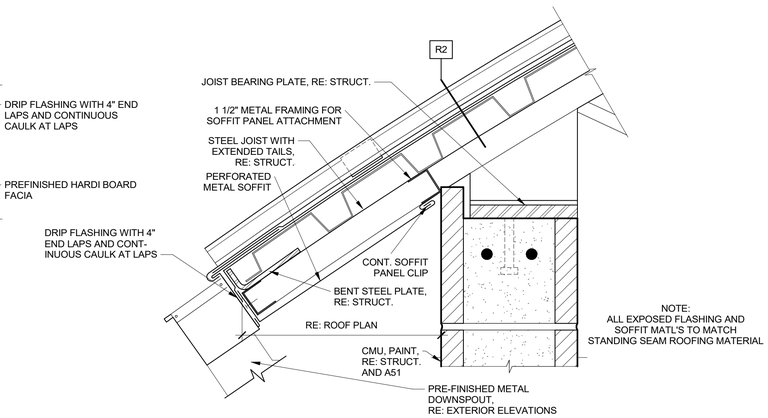
SHEET TITLE
ROOFING DETAILS

SHEET
A8.1
ORIGINAL SHEET SIZE
24" x 36"

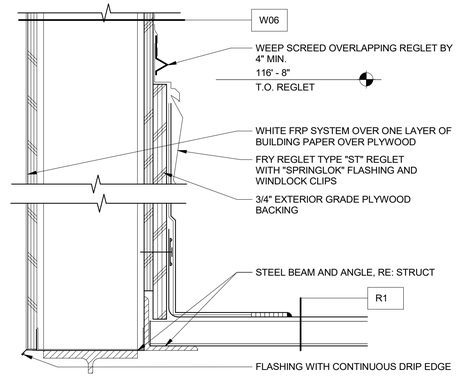
1/19/2023 12:24:19 PM



1 VAULTED ROOF RAKE AT EXIT
3" = 1'-0"



2 ROOF EDGE
3" = 1'-0"



3 FRAME WALL FLASHING
3" = 1'-0"

JESSE GOLDMAN, ARCHITECT
2696 S COLORADO BLVD, SUITE 525
DENVER, CO 80222
(303) 962-9164

THESE DRAWINGS AND SPECIFICATIONS, AS INSTRUMENTS OF SERVICE, ARE AND SHALL REMAIN THE PROPERTY OF THE ARCHITECT. ENGINEER WHETHER THE PROJECT FOR WHICH THEY ARE MADE IS EXECUTED OR NOT. THESE DRAWINGS AND SPECIFICATIONS ARE NOT TO BE USED BY ANY PERSON OR ENTITY ON OTHER PROJECTS, FOR ADDITIONS TO THIS PROJECT, OR FOR COMPLETION OF THIS PROJECT WHEN PHASED WITHOUT THE WRITTEN PERMISSION OF THE ARCHITECT. ENGINEER.
Copyright © 2023

QUICK N CLEAN CAR WASH
PARKER RD. & PINE LANE AVE.
PARKER, CO
2696 S COLORADO BLVD, SUITE 525
DENVER, CO 80222
(303) 962-9164
www.cshqa.com

CSHQA

PROJECT	DATE
20037.000	1-19-2023
DRAWN	CHECKED
Author	Checker

REVISED

SHEET TITLE
ROOFING DETAILS

SHEET
A8.2
ORIGINAL SHEET SIZE
24" x 36"

1/19/2023 12:24:19 PM

PLUMBING SPECIFICATIONS AND NOTES

- THE CONTRACTOR, AND HIS SUBCONTRACTORS AND SUPPLIERS, SHALL INCLUDE IN HIS BID ALL MATERIALS, LABOR, AND EQUIPMENT INVOLVED, IN ACCORDANCE WITH ALL LOCAL CUSTOMS, CODES, RULES, REGULATIONS; AND SECURE COMPLIANCE OF ALL PARTS OF THE SPECIFICATIONS AND DRAWINGS REGARDLESS OF SECTIONAL INCLUSION IN THESE SPECIFICATIONS. THE CONTRACTOR SHALL BE RESPONSIBLE FOR THE COMPLETE AND SATISFACTORY ACCOMPLISHMENT OF ALL WORK INCLUSIVE OF WHATEVER MISCELLANEOUS MATERIAL AND/OR APPURTENANCES ARE REQUIRED TO PERFECT THE INSTALLATION, AND DEMONSTRATE THAT ALL ELECTRICAL SYSTEMS WILL OPERATE SATISFACTORILY UNDER NORMAL OPERATING CONDITIONS.
- DO NOT SCALE DRAWINGS. THE DRAWINGS ARE DIAGRAMMATIC AND SHOW THE GENERAL LOCATION AND ARRANGEMENT OF EQUIPMENT, PIPING AND RELATED ITEMS. THEY SHALL BE FOLLOWED AS CLOSELY AS ELEMENTS OF THE CONSTRUCTION WILL PERMIT. THE CONTRACTOR SHALL PROVIDE/INSTALL ALL PLUMBING SYSTEMS, AND ASSOCIATED EQUIPMENT, COMPLETE AND INCLUDE ALL NECESSARY OFFSETS, FITTINGS, AND OTHER COMPONENTS REQUIRED DUE TO INTERFERENCES, SPACE CONSTRAINTS, CODE REQUIREMENTS, ETC. AS REQUIRED TO PROVIDE A COMPLETE/FUNCTIONAL SYSTEM.
- WORK SHALL BE COORDINATED WITH THE WORK OF OTHER TRADES. CONTRACTOR SHALL GUARANTEE THAT ALL LABOR, MATERIALS, AND EQUIPMENT ARE FREE FROM DEFECTS AND AGREES TO REPLACE OR REPAIR ANY PART OF THIS INSTALLATION WHICH BECOMES DEFECTIVE WITHIN A PERIOD OF ONE YEAR FROM THE DATE OF SUBSTANTIAL COMPLETION FOLLOWING FINAL ACCEPTANCE. ACCEPTANCE DATE OF SUBSTANTIAL COMPLETION SHALL BE AS ENGINEER. DETERMINED BY THE ARCHITECT AND/OR ENGINEER.
- SIZES, INVERTS AND POINTS OF CONNECTION OF EXISTING PLUMBING PIPING AND UTILITIES SHALL VERIFIED IN THE FIELD PRIOR TO BEGINNING WORK.
- PROVIDE COMPLETE MAINTENANCE AND OPERATING INSTRUCTIONAL MANUALS COVERING ALL PLUMBING EQUIPMENT AND INDIVIDUAL EQUIPMENT SPECIFICATION SECTIONS.
- ALL SHOP DRAWINGS AND EQUIPMENT SUBMITTALS SHALL BE SUBMITTED AS A COMPLETE PACKAGE, NOT PIECE MAIL. ALL SUBMITTALS SUBMITTED INDIVIDUALLY SHALL BE RETURNED UNCHECKED. EXCEPTIONS TO THIS ONLY SHALL INCLUDE LONG LEAD ITEMS.
- INSTALL EQUIPMENT IN STRICT ACCORDANCE WITH ALL DIRECTIONS AND RECOMMENDATIONS FURNISHED BY THE MANUFACTURER. WHERE SUCH DIRECTIONS ARE IN CONFLICT WITH THE DRAWINGS AND SPECIFICATIONS, REPORT SUCH CONFLICTS TO THE ARCHITECT AND/OR ENGINEER FOR RESOLUTION.
- PROVIDE AND INSTALL SCHEDULE 40 BLACK STEEL PIPE SLEEVES, CUT TO LENGTH, WHEREVER PIPES PASS THROUGH ABOVE GRADE WALLS AND FLOORS. PROVIDE AND INSTALL GALVANIZED STEEL PIPE SLEEVES, CUT TO LENGTH, WHEREVER PIPES PASS THROUGH BELOW GRADE FOUNDATION WALLS AND SLAB ON GRADE FLOORS. SLEEVES SHALL TERMINATE FLUSH WITH WALLS IN FINISHED AREAS. ALL SLEEVES THROUGH THE FLOOR ARE TO EXTEND TWO (2) INCHES ABOVE FINISH FLOOR. PROVIDE ESCUTCHEONS AT EACH PENETRATION THROUGH WALLS, FLOORS, AND CEILINGS IN PROVIDE ADEQUATE CLEARANCE TO SEAL THE SPACE AROUND PIPES AND SLEEVES THROUGH WALLS, FLOORS AND CEILINGS. PATCH SLEEVES TO MATCH BUILDING MATERIAL IN EXPOSED AREAS. ALLOW FOR PROPER PIPE MOVEMENT AND SEALING.
- PENETRATIONS OF FIRE RATED WALLS OR FLOORS BY PIPE SHALL BE SEALED BY A FIRESTOPPING SYSTEM UL LISTED FOR THE APPLICATION IN ACCORDANCE WITH THE WALL RATING. PENETRATION SEAL MATERIALS SHALL BE INSTALLED IN ACCORDANCE WITH PRINTED INSTRUCTIONS OF THE UL FIRE RESISTANCE DIRECTORY AND MANUFACTURERS INSTRUCTIONS. FIRESTOPPING SYSTEM SHALL BE EQUAL TO 3M FIRE BARRIER. FIRESTOPPING MATERIAL SHALL BE CAULK OR PUTTY TYPE.
- PROVIDE ALL EXCAVATION, TRENCHING, TUNNELING AND BACKFILLING REQUIRED FOR THE PLUMBING WORK IN ACCORDANCE WITH ADOPTED PLUMBING CODES.
- MAKE CONNECTIONS TO EQUIPMENT, FIXTURES AND OTHER ITEMS INCLUDED IN THE WORK IN ACCORDANCE WITH THE APPROVED SHOP DRAWINGS AND ROUGH-IN MEASUREMENTS FURNISHED BY THE MANUFACTURES OF THE PARTICULAR EQUIPMENT FURNISHED.
- TEST DRAINAGE PIPING SYSTEMS IN ACCORDANCE WITH THEIR RESPECTIVE AND APPLICABLE GOVERNING CODES. TEST DRAINAGE AND WASTE PIPING HYDRAULICALLY BY FILLING THE SYSTEM TO ITS HIGHEST POINT OR AT A STATIC HEAD OF 10 FEET, WHICHEVER IS HIGHER.
- PRESSURE TEST PLUMBING PIPING (DOMESTIC COLD WATER, DOMESTIC HOT WATER, ETC.) IN ACCORDANCE WITH GOVERNING AND APPLICABLE CODES. AT MINIMUM, TEST WITH WATER AT 225 PSIG – PERMISSIBLE PRESSURE DROP SHALL BE 0 PSIG OVER 2 HOUR PERIOD.
- DOMESTIC WATER PIPING SHALL BE INSULATED IN ACCORDANCE WITH TABLE C403.11.3 OF THE IECC AND WITH GOVERNING AND APPLICABLE CODES. INSULATION SHALL HAVE A VAPOR BARRIER WITH SELF-SEALING ADHESIVE JOINTS. INSULATED PIPING EXPOSED TO VIEW SHALL BE COVERED AND FINISHED WITH A 30 MIL, 1" THICK PVC JACKET. FITTINGS, VALVES AND ACCESSORIES SHALL ALSO BE JACKETED.
- PIPING SHALL BE IDENTIFIED WITH PLASTIC PIPE MARKERS IN CLEAR VIEW AND ALIGNED WITH AXIS OF PIPING. SERVICE AND FLOW DIRECTION SHALL BE INDICATED. DISTANCE BETWEEN IDENTIFICATION LOCATIONS SHALL NOT EXCEED 20 FEET. IDENTIFICATION SHALL BE LOCATED AT EACH VALVE, RUNOUT AND ON BOTH SIDES OF AN OBSTRUCTION.
- PROVIDE EXTENDED STEMS ON VALVE TO KEEP HANDLES CLEAR OF INSULATION.
- PIPE HANGER SPACING:
  METAL PIPING:
  - PIPE SIZE: 1/2 INCHES TO 1-1/4 INCHES: MAXIMUM HANGER SPACING: 6.5 FT. HANGER ROD DIAMETER: 3/8 INCHES.
  - PIPE SIZE: 1-1/2 INCHES TO 2 INCHES: MAXIMUM HANGER SPACING: 10 FT. HANGER ROD DIAMETER: 3/8 INCH.
  - PIPE SIZE: 2-1/2 INCHES TO 3 INCHES: MAXIMUM HANGER SPACING: 10 FT. HANGER ROD DIAMETER: 1/2 INCH.
  - PIPE SIZE: 4 INCHES TO 6 INCHES: MAXIMUM HANGER SPACING: 10 FT. HANGER ROD DIAMETER: 5/8 INCH.

  PLASTIC PIPING:
  - ALL SIZES: MAXIMUM HANGER SPACING: 4 FT. HANGER ROD DIAMETER: 3/8 INCH.
- VENTS TERMINATED ABOVE ROOF SHALL BE 10' MINIMUM FROM OUTSIDE AIR INTAKES AND/OR OPERABLE WINDOWS.
- FIXTURE LOCATIONS AND MOUNTING HEIGHTS SHALL BE ACCORDING TO THE ARCHITECTURAL DRAWINGS.
- INSTALL WATER HAMMER ARRESTORS COMPLETE WITH ACCESSIBLE ISOLATION VALVE ON HOT AND COLD WATER SUPPLY PIPING TO LAVATORIES, SINKS, WASHING MACHINE OUTLETS, WATER CLOSETS, URINALS, DISHWASHERS, BATHTUBS/SHOWERS, AND OTHER APPLICABLE FIXTURE LOCATIONS WITH QUICK CLOSING VALVES. WATER HAMMER ARRESTORS SHALL CONFORM TO ASSE 1010.
- INSTALL ASSE 1070 LISTED "POINT OF USE" THERMOSTATIC MIXING VALVES AT ALL FIXTURES (LAVATORIES, SINKS, ETC.). PROVIDE LAV-SHIELDS UNDER ALL ACCESSIBLE LAVATORIES FOR PROTECTION AGAINST CONTACT AS REQUIRED BY CODE.
- COORDINATE INSTALLATION OF FLOOR DRAINS AND FLOOR SINKS WITH THE LOCATE FLOOR DRAINS AND FLOOR SINKS PER ARCHITECTURAL DRAWINGS. CAST FLOOR DRAINS AND FLOOR SINKS INTO THE WORK OF PLACING CONCRETE TO ASSURE PROPER DRAIN ELEVATION AND FLOOR SLOPE. FLOOR DRAINS IN ABOVE GROUND SLABS SHALL BE FLASHED WITH CONCRETE AT THE TIME THE FLOORS ARE PLACED AND MAKE WATERTIGHT. SEPARATE FINISH WITH SQUARE LEAD SHEET PANS. FLOOR DRAINS IN SLABS ON GRADE PROVIDED WITH MEMBRANE OR METAL PAN WATERPROOFING DO NOT REQUIRE LEAD FLASHING, BUT SHALL HAVE TWO ADDITIONAL LAYERS OF THE WATERPROOFING AT THE FLOOR DRAINS. FLOOR DRAIN TRAP SIZE SHALL MATCH THE OUTLET SIZE OF THE DRAIN AND THE SIZE SHOWN FLASHING SHALL NOT OBSTRUCT THE WEEPHOLES. ON THE PLANS. FLOOR DRAIN TRAPS SUBJECT TO LOSS BY EVAPORATION (I.E. STORAGE ROOMS, MECHANICAL ROOMS, BATHROOMS, ETC.) SHALL HAVE A DEEP SEAL TRAP CONSISTING OF AT LEAST A 4 INCH SEAL, A TRAP PRIMER CONNECTION, AND BE PROTECTED BY A TRAP PRIMER VALVE. TRAP PRIMER VALVES SHALL BE PROVIDE TRAP PRIMER TAP OFF TOP OF DOMESTIC COLD WATER MAIN PIPE FEEDING NEARBY PLUMBING FIXTURE. INSTALLED IN CONCEALED BUT ACCESSIBLE LOCATIONS FOR MAINTENANCE.
- LINE WHICH CHANGES DIRECTION CLEANOUTS SHALL BE INSTALLED IN ACCESSIBLE LOCATIONS AND PROVIDED IN ANY HORIZONTAL DRAINAGE CLEANOUTS IN HORIZONTAL DRAINAGE MORE THAN 45 DEGREES, AT THE ENDS OF MAIN AND BRANCH RUNS, BASE OF STACKS, AND AT ALL TRAPS LINES LOCATED INSIDE THE BUILDING SHALL BE PROVIDED AT MAXIMUM SPACING OF 50 FEET FOR DRAINS 4 INCHES AND SMALLER. ALL HORIZONTAL DRAINAGE LINES INSIDE THE BUILDING LARGER THAN 4 INCHES SHALL HAVE CLEANOUTS SPACED AT A MAXIMUM OF 80 FEET.
- WHERE IN CONTACT WITH MATERIAL OR ATMOSPHERE EXERTING A CORROSIVE ACTION, METALLIC GAS PIPING AND FITTINGS SHALL BE COATED WITH CORROSION-RESISTANT MATERIAL.
- WHERE NOT INTEGRAL TO THE THE SPECIFIED STORAGE TANK-TYPE WATER HEATER(S) AND HOT WATER STORAGE TANK(S), THE CONTRACTOR SHALL PROVIDE HEAT TRAPS ON SUPPLY AND DISCHARGE PIPING.
- INTERIOR, ABOVE GRADE STORM DRAINAGE PIPING SHALL BE INSULATED WITH 1-1/2" THICK ALL-SERVICE-JACKET WITH POLYMER FILM EXTERIOR SURFACE.

PLUMBING BASIS OF DESIGN

DOMESTIC WATER TAP:

PER EMAIL CONVERSATION (10/19/22) WITH THE CITY OF PARKER WATER AND SANITATION DISTRICT (303.841.4627), THE AVAILABLE WATER PRESSURE IS BETWEEN 108 AND 115 PSI. THE DESIGN WILL USE 108 PSI FOR THE DOMESTIC WATER PIPE SIZING.

THE BUILDING WILL BE SERVED BY A 1-1/2" TAP UPSIZED TO 2", FIVE-FEET AFTER THE METER VAULT. EXTEND 2" DOMESTIC WATER SUPPLY INTO THE EQUIPMENT ROOM TO A 2" BACKFLOW PREVENTER AND 2" DISTRIBUTION. SEE DETAIL A/P2.1.

DESIGN PRESSURE SHALL BE 80 PSI (MAX). PLUMBING CONTRACTOR SHALL FIELD VERIFY PRESSURE PROVIDED PRIOR TO STARTING WORK AND NOTIFY ENGINEER IF PRESSURE IS DIFFERENT. PROVIDE A PRESSURE REDUCING VALVE AS REQUIRED PER CODE TO MAINTAIN THIS MAXIMUM PRESSURE.

NATURAL GAS SYSTEM:

PER PHONE CONVERSATION (10/19/22) WITH XCEL ENERGY BUILDER'S CALL LINE (800-628-2121), THE AVAILABLE GAS PRESSURE IS A POUNDS MEDIUM SYSTEM (2 PSI OR 6" WC AVAILABLE). THE DESIGN WILL USE 2 PSI GAS PRESSURE FOR THE GAS PIPE SIZING.

CONTRACTOR TO COORDINATE ALL GAS METER AND GAS PRESSURE WORK WITH UTILITY COMPANY AS REQUIRED. NOTIFY ENGINEER IF PRESSURE IS DIFFERENT.

STORM DRAINAGE:

PER IPC APPENDIX B, THE STORM DRAINAGE SYSTEM HAS BEEN SIZED USING THE 3.0 INCHES PER HOUR RAINFALL RATE FOR COLORADO SPRINGS, COLORADO. THE DESIGN WILL USE HORIZONTAL PIPE SIZES BASED ON AN 1/4" PER FOOT SLOPE.

SAND/OIL INTERCEPTOR SIZING CALCULATION:

TOTAL TUNNEL WASH AREA (INCLUDING EQUIPMENT ROOM) = 4,631 SQUARE FEET

6 CUBIC FEET FOR FIRST 100 SQUARE FEET

1 CUBIC FOOT FOR EACH ADDITIONAL 100 SQUARE FEET

6 + 1*45.31 = 51.31 CUBIC FEET = 384 GALLONS (OWNER REQUESTS A 1,000 GALLON SAND/OIL INTERCEPTOR)

PLUMBING MATERIAL SCHEDULE

WASTE/STORM PIPING (ABOVE GRADE): ALL SIZES SHALL BE SCHEDULE 40 PVC PIPE AND FITTINGS SOLVENT WELD JOINTS.

WASTE/STORM PIPING (BELOW GRADE): ALL SIZES SHALL BE SCHEDULE 40 PVC PIPE AND FITTINGS SOLVENT WELD JOINTS.

VENT PIPING (ABOVE GRADE): ALL SIZES SHALL BE SCHEDULE 40 PVC PIPE AND FITTINGS SOLVENT WELD JOINTS.

DOMESTIC WATER (BELOW GRADE): SIZES 1/2" TO 2-1/2" SHALL BE TYPE K COPPER WITH COPPER PRESSURE-SEALED FITTINGS AND JOINTS.

DOMESTIC WATER (ABOVE GRADE): SIZES 1/2" TO 2-1/2" SHALL BE TYPE L COPPER WITH WROUGHT COPPER FITTINGS AND LEAD-FREE SOLDER JOINTS.

CONDENSATE DRAINS (ABOVE GRADE): ALL SIZES SHALL BE TYPE M COPPER WITH WROUGHT COPPER FITTINGS AND LEAD-FREE SOLDER JOINTS.

GAS PIPING (ABOVE GRADE): SIZES 1/2" TO 2" SHALL BE SCHEDULE 40 BLACK STEEL PIPE WITH BLACK MALLEABLE IRON SCREWED FITTINGS AND THREADED JOINTS.

GAS PIPING (ABOVE GRADE): SIZES 2-1/2" AND GREATER OR ROUTED IN AIR PLENUMS SHALL BE BLACK FORGED STEEL SOCKET OR WELD END FITTINGS.

COMPRESSED INSTRUMENT AIR: ALL SIZES SHALL BE TYPE L COPPER WITH WROUGHT COPPER FITTINGS (ASTM B 819). MANUFACTURER CLEANED, DE-GREASED AND IDENTIFIED PRIOR TO INSTALLATION, KEPT SEALED UNTIL PREPARED FOR INSTALLATION. FITTINGS SHALL BE CLEANED FOR OXYGEN SERVICE AND JOINTS SHALL BE SOLDERED. WHERE IN CONFLICT, MANUFACTURER'S EQUIPMENT INSTALLATION INSTRUCTIONS SHALL TAKE PRECEDENCE.

AIR COMPRESSOR VENTS: ALL SIZES OF PIPE AND FITTINGS SHALL BE CAST IRON WITH A CAP AND MESH SCREEN AT WALL (OR ROOF) PENETRATION. VACUUM PIPING SHALL BE INSTALLED WITH 45 DEGREE BENDS. WHERE IN CONFLICT, MANUFACTURER'S EQUIPMENT INSTALLATION INSTRUCTIONS SHALL TAKE PRECEDENCE.

UTILITY COORDINATION

GENERAL CONTRACTOR TO GENERATE AND SUBMIT ALL UTILITY APPLICATIONS WITH LOCAL UTILITY COMPANY PRIOR TO COMMENCEMENT OF CONSTRUCTION. CONTRACTOR RESPONSIBLE TO SUBMIT THIS APPLICATION UPON INITIAL AWARDING OF PROJECT TO AVOID ANY LAG IN START AND EQUIPMENT LEAD TIMES. THE DESIGN TEAM IS NOT RESPONSIBLE FOR THIS APPLICATION PROCESS OR SUBMITTAL.

PLUMBING SHEET INDEX/CODES

JURISDICTION: PARKER, COLORADO

PLUMBING CODE: 2021 INTERNATIONAL PLUMBING CODE

FUEL GAS CODE: 2021 INTERNATIONAL FUEL GAS CODE

ENERGY CODE: 2021 INTERNATIONAL ENERGY CONSERVATION CODE

SHEET NO.	SHEET DESCRIPTION	ISSUE 01/18/23 – PERMIT SET
P0.1	PLUMBING COVER SHEET	X
P0.2	PLUMBING SCHEDULES	X
P1.1	PLUMBING FLOOR PLAN	X
P1.2	PLUMBING ROOF PLAN	X
P2.1	PLUMBING DETAILS	X
P2.2	PLUMBING ISOMETRIC	X

PIPING	ABBR	DESCRIPTION
— (E) —	(E)	EXISTING PIPING
(D)	(D)	DEMO PIPING TO BE REMOVED
	W	WASTE (ABOVE GRADE)
	W	WASTE (BELOW GRADE)
	V	VENT
—SOD—	SOD	SAND/OIL DRAIN (ABOVE GRADE)
—SOD—	SOD	SAND/OIL DRAIN (BELOW GRADE)
	SD/OSD	STORM DRAIN (ABOVE GRADE)
	SD/OSD	STORM DRAIN (BELOW GRADE)
—F—	F	FIRE LINE PIPING
—CW—	CW	COLD WATER PIPING
—HW—	HW	HOT WATER PIPING
—HWR—	HWR	HOT WATER RECIRC. PIPING
—T— —G—	T G	TEMPERED WATER (TEMP. LISTED) GAS PIPING
—MG—	MG	MEDIUM PRESSURE GAS PIPING
—GV—	GV	GAS PRESSURE REGULATOR VENT
—D—	D	DRAIN PIPING

FITTINGS	ABBR	DESCRIPTION
	U	UNION
		THERMOMETER W/THERMOWELL
	AV	AIR VENT
	FC	FLEXIBLE PIPE CONNECTOR
	PG	PRESSURE GAUGE W/ GAUGE COCK
	VTR	VENT THROUGH ROOF
		ELBOW UP
		ELBOW DOWN
		TEE UP
		TEE DOWN
		PIPE CAP OR PLUG
	FCO	FLOOR CLEANOUT
	WCO	WALL CLEANOUT
		PIPE REDUCER

VALVES	ABBR	DESCRIPTION
	SOV	SHUT-OFF VALVE
	CV	CHECK VALVE WITH INDICATION OF FLOW DIRECTION
	PRV	PRESSURE REDUCING VALVE
S	SV	SOLENOID VALVE
	CS,BV	CIRCUIT SETTER OR BALANCING VALVE
	TPR	TEMPERATURE/ PRESSURE RELIEF VALVE
	STR	STRAINER W/ BLOW-OFF & CAPPED HOSE- END CONNECTION
	GV	GAS VALVE/COCK
	GPR	GAS PRESSURE REGULATOR

FIX/EQUIP	ABBR	DESCRIPTION
	RD	ROOF DRAINS (FLOOR ABOVE)
	RD	ROOF DRAINS (SAME FLOOR)
	DSN	DOWNSPOUT NOZZLE
		PUMP
	HB	HOSE BIBB

ABBREVIATIONS

(R)	REMOVE OR RELOCATE
(E)	EXISTING
(N)	NEW
(REF)	REFERENCE
DFU	DRAINAGE FIXTURE UNIT
WSFU	WATER SUPPLY FIXTURE UNIT
AFF	ABOVE FINISHED FLOOR
AFG	ABOVE FINISHED GRADE
BFF	BELOW FINISHED FLOOR
BFG	BELOW FINISHED GRADE
BTUH	BRITISH THERMAL UNIT PER HOUR
CFH	CUBIC FEET PER HOUR
CO	CLEANOUT
°F	DEGREE FAHRENHEIT
FPM	FEET PER MINUTE
FS	FLOOR SINK
FD	FLOOR DRAIN
FT WC	FEET WATER COLUMN
IN WC	INCHES WATER COLUMN
IRR	IRRIGATION
GAL	GALLON
GPH	GALLONS PER HOUR
GPM	GALLONS PER MINUTE
KW	KILOWATTS
MAX	MAXIMUM
MIN	MINIMUM
MBH	THOUSAND BTUH
MCA	MINIMUM CIRCUIT AMPS
MOCP	MAXIMUM OVER CURRENT PROTECTION
NTS	NOT TO SCALE
OSD	OVERFLOW STORM DRAIN
ORD	OVERFLOW ROOF DRAIN
PRESS	PRESSURE
PSI	POUNDS PER SQUARE INCH
PW	PUMPED WASTE
SPECS	SPECIFICATIONS
SP	STATIC PRESUSURE
SD	STORM DRAIN
TYP	TYPICAL
W/	WITH
W/O	WITHOUT

SYMBOLS	ABBR	DESCRIPTION
F 1	F-1	DESIGNATION
1		SHEET KEY NOTES
	POC	POINT OF CONN. (CONN. NEW TO EXISTING)
	POD	POINT OF DISCONNECTION

3 CONSULTING ENGINEERS
1415 Park Ave. W., Denver, CO 80205
p 303.357.1998
3consultingengineers.com

COLORADO LICENSED BRUCE PACHINGER 51373 PROFESSIONAL ENGINEER
2023-01-18

3 CONSULTING ENGINEERS

JESSE GOLDMAN, ARCHITECT
2696 S COLORADO BLVD, SUITE 525
DENVER, CO 80222
(303) 962-9164

THESE DRAWINGS AND SPECIFICATIONS AS INSTRUMENTS OF SERVICE, ARE AND SHALL REMAIN THE PROPERTY OF 3 CONSULTING ENGINEERS. THE PROJECT FOR WHICH THEY ARE MADE IS EXECUTED AND PUBLISHED IN ACCORDANCE WITH COPYRIGHT LAWS. THEY ARE NOT BE USED BY ANY PERSON OR ENTITY ON OTHER PROJECTS, FOR ADDITIONS TO THIS PROJECT, OR FOR COMPLETION OF THIS PROJECT WHEN PHASES WITHOUT THE WRITTEN CONSENT OF 3 CONSULTING ENGINEERS. COPYRIGHT © 2023

QUICK N CLEAN CAR WASH
PARKER RD. & PINE LANE AVE.
PARKER, CO 80134
2696 S COLORADO BLVD, SUITE 525
DENVER, CO 80222
(303) 962-9164
www.cshqa.com

CSHQA

PROJECT	DATE
20037	1-16-2023
DRAWN	CHECKED
JCB	JCB

REVISED

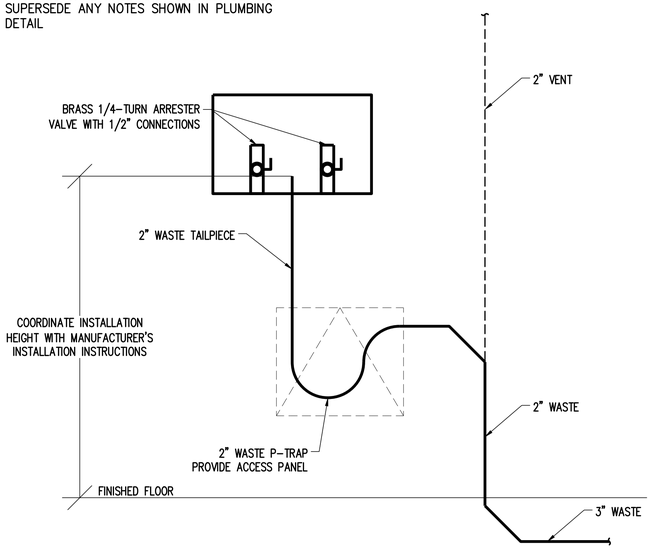
SHEET TITLE
PLUMBING COVER SHEET

SHEET
P0.1

PLUMBING EQUIPMENT SCHEDULE

EQUIPMENT	DESCRIPTION
WH 1	AO SMITH MODEL #BTX-80, 50 GALLON NATURAL GAS WATER HEATER, 76,000 BTUH INPUT, 63 GPH HEAT RECOVERY CAPACITY AT 100°F AND 98 GALLON FIRST HOUR DELIVERY. FURNISH WITH TEMPERATURE & PRESSURE RELIEF VALVE. PROVIDE 2-1/2" DEEP DRAIN PAN AND ROUTE 1-1/4" DRAIN LINE TO NEAREST FLOOR SINK. PROVIDE CONDENSATE NEUTRALIZATION KIT AND INSTALL PER MANUFACTURER'S INSTALLATION INSTRUCTIONS.
ET 1	AMTROL MODEL THERM-X-TROL ST-12C DOMESTIC HOT WATER EXPANSION TANK, INLINE MOUNTED WITH TURBULATOR, 6.4 GALLONS TANK, 0.5 GALLONS ACCEPTANCE FACTOR, 11" DIA.x14" HIGH, 3/4" INLET.
HCP 1	TACO MODEL 008-BC6 CARTRIDGE CIRCULATOR LEAD-FREE BRONZE DOMESTIC WATER RECIRCULATING PUMP FOR 1.5 GPM @ 14 FT TDH, 115V/1ø, 0.84 AMPS, 1/25 HP MOTOR @ 3250 RPM. PROVIDE AQUASTAT MODEL #563-2 AND INSTALL AS REQUIRED PER MANUFACTURER'S INSTALLATION INSTRUCTIONS.
SOI 1	OLDCASTLE PRECAST MODEL #SOI-STANDARD SAND/OIL INTERCEPTOR FOR 1,000 GALLON LIQUID CAPACITY. TANK DESIGN FOR H-20 TRAFFIC WHEEL LOAD WITH DRY COIL CONDITIONS. EARTH COVER OVER TANK NOT TO EXCEED 8 FEET. FURNISH WITH (2) 24" DIAMETER GASKETED H-20 TRAFFIC COVERS. PROVIDE EXTRA RISERS AS REQUIRED TO MATCH GRADE, 6" INLET & OUTLET.

ARCHITECTURAL WALL AND FLOORING DETAILS SUPERSEDE ANY NOTES SHOWN IN PLUMBING DETAIL



CLOTHES WASHER — A

NO SCALE

GAS LOAD SCHEDULE

ITEM	QTY	GAS LOAD (MBH)	GAS LOAD (CFH)	SUBTOTAL (CFH)
CAR WASH HEATERS (PROVIDED BY OTHERS)	2	550	661.9	1323.8
B 1 / B 2 / B 3	3	250	300.8	902.4
RTU 1	1	115	138.4	138.4
WH 1	1	76	91.5	91.5
GUH 1	1	60	72.2	72.2
IRH 1 / IRH 2 / IRH 3 / IRH 4	4	150	180.5	722.0
TOTAL GAS LOAD = 3250.3 CFH				

PLUMBING FIXTURE SCHEDULES AND NOTES

FIXTURE	DESCRIPTION AND NOTES	MANUFACTURERS AND MODELS	PLUMBING CONNECTION SCHEDULE HW/T	CW	V	TRAP	S/W

WC1	ADA COMPLIANT FLOOR SET, FLUSH TANK TOILET WITH LOW CONSUMPTION 1.0 GPF SIPHON JET FLUSHING ACTION, ELONGATED BOWL, GLAZED TRAPWAY. [1][2][3][4][5][6][8]	MANUFACTURERS AND MODELS
		TOILET = KOHLER #K-5298 OR EQUAL BY TOTO, PROFLO, AMERICAN STANDARD, ZURN
		SEAT = KOHLER #K-4666-C OR EQUAL BY OLSONITE, BENEKE, CHURCH, BEMIS
			–	3/4	2	–	4

L1	20"X18" VITREOUS CHINA WALL HUNG LAVATORY SINK WITH HOLE DRILLINGS TO MEET FAUCET SPECIFICATIONS. PROVIDE THERMOSTATIC MIXING VALVE. SEE DETAIL FOR SPECIFICATION. [3][4][7][8]	MANUFACTURERS AND MODELS LAVATORY = AMERICAN STANDARD #0355.012 OR EQUAL BY TOTO, KOHLER, CRANE FAUCET = AMERICAN STANDARD #1480.100 OR EQUAL BY KOHLER, DELTA, CHICAGO DRAIN = DEARBORN BRASS #760W-1 OR EQUAL BY KOHLER, AMERICAN STANDARD, DELTA TRAP AND SUPPLY INSULATION = TRUEBRO #103 E-Z OR EQUAL BY BROCAR, PROFLO CARRIER = ZURN #Z1231 OR EQUAL BY JOSAM, J.R. SMITH, WADE, MIFAB	1/2	1/2	2	1-1/2	2

MSB1	24"X24" MOP SERVICE BASIN WITH 10" HIGH SIDES, STAINLESS STEEL WALL GUARDS, 3"IPS INTEGRAL DRAIN STAINLESS STEEL DRAIN AND REMOVABLE STRAINER. [15][16][17][18]	MANUFACTURERS AND MODELS
		MOP SERVICE BASIN = FIAT MODEL #MSB2424 WITH #832-AA AND #889-CC OR EQUAL BY ZURN
		FAUCET = FIAT MODEL #830-AA
			3/4	3/4	2	3	3

EWC1	SINGLE HEIGHT WALL HUNG ADA COMPLIANT (NON-REFRIGERATED) BOTTLE FILLING STATION. SEE PLANS FOR INSTALLATION HEIGHT. [8][10][11][12][13][14]	MANUFACTURERS AND MODELS ELECTRIC WATER COOLER = ELKAY #EZWSSM OR EQUAL BY OASIS, HALSEY TAYLOR WALL MOUNTING BRACKET = INCLUDED	–	1/2	1-1/2	1-1/2	1-1/2
HB1	ANTI-FREEZE RECESSED HOSE BIBB WITH 3/4" HOSE END WALL HYDRANT WITH LOCKABLE DOOR. [9]	MANUFACTURERS AND MODELS HOSE BIBB = WOODFORD MODEL #B65	–	3/4	–	–	–
CWB1	RECESSED CLOTHES WASHER BOX WALL BOX WITH SHUT-OFF VALVES AND WATER HAMMER [9] ARRESTORS FOR HOT AND COLD WATER AND 2" WASTE CONNECTION.	MANUFACTURERS AND MODELS CLOTHES WASHER BOX = GUY GRAY MODEL #W4700HA	1/2	1/2	2	2	2
TD1	FIBERGLASS TRENCH DRAIN SYSTEM WITH STEEL ANGLE FRAME, 10' MODULAR SECTIONS, [9][19] 6" WIDE TOP WITH HEAVY DUTY CAST IRON GRATES.	MANUFACTURERS AND MODELS TRENCH DRAIN = ZURN MODEL #ZF806-DGE	–	–	SEE PLANS	SEE PLANS	SEE PLANS
FD1	PVC FLOOR DRAIN WITH ROUND NICKEL BRONZE STRAINER, TRAP PRIMER CONNECTION [9] AND SEDIMENT BUCKET.	MANUFACTURERS AND MODELS FLOOR DRAIN = ZURN MODEL #EZ1 OR EQUAL BY JR SMITH, JOSAM	–	–	SEE PLANS	SEE PLANS	SEE PLANS
FS1	PVC FLOOR SINK WITH HALF GRATE, DOME STRAINER AND SEDIMENT BUCKET. [9]	MANUFACTURERS AND MODELS FLOOR SINK = ZURN MODEL #FD-2370-DS-H-Y OR EQUAL BY JR SMITH, JOSAM	–	–	SEE PLANS	SEE PLANS	SEE PLANS
WCO1	PROVIDE PVC CLEANOUT TEE WITH CLEANOUT PLUG AND ROUND, STAINLESS STEEL WALL ACCESS COVER WITH SECURING SCREW. [9]	MANUFACTURERS AND MODELS WALL CLEANOUT PLUG= ZURN MODEL #CO2490 OR EQUAL BY JR SMITH, JOSAM ACCESS COVER = ZURN MODEL #CO-2530-SS5	–	–	–	–	SEE PLANS
FCO1	FLOOR CLEANOUT, PVC SOLVENT WELD BODY, GAS AND WATERTIGHT ABS TAPERED PLUG AND TOP ASSEMBLY, ROUND SCORIATED COVER IN NICKEL BRONZE WITH ROUGH-IN COVER. [9]	MANUFACTURERS AND MODELS FLOOR CLEANOUT = ZURN MODEL #EZC OR EQUAL BY JR SMITH, JOSAM	–	–	–	–	SEE PLANS
GCO1	GRADE CLEANOUT WITH PVC SOLVENT WELD BODY, INTEGRATED SELF CONTAINED ROUND [9] LIGHT DUTY NICKEL BRONZE SCORIATED COVER WITH ROUGH-IN COVER.	MANUFACTURERS AND MODELS GRADE CLEANOUT = ZURN MODEL #EZC-PV4 OR EQUAL BY JR SMITH, JOSAM	–	–	–	–	SEE PLANS
RD1 ORD1	CAST IRON ROOF DRAIN WITH REMOVABLE DOME. [9]	MANUFACTURERS AND MODELS ROOF DRAIN/OVERFLOW ROOF DRAIN = ZURN #ZC100-C-EA-R	–	–	–	–	SEE PLANS
DSN1	NICKEL BRONZE DOWNSPOUT NOZZLE WITH REMOVABLE STAINLESS SCREEN. [9]	MANUFACTURERS AND MODELS DOWNSPOUT NOZZLE = ZURN MODEL #Z199-ZAB-NH-SS	–	–	–	–	SEE PLANS

SCHEDULE NOTES

1. BOLT DOWN LOCKING TANK LID.
2. PROVIDE OPEN FRONT WHITE SEAT LESS COVER WITH CHECK HINGE.
3. ALL TRIM TO BE CHROME PLATED COPPER OR BRASS.
4. PROVIDE CHROME PLATED CAST BRASS ESCUTCHEON AT WALL PENETRATION.
5. RIM OF TOILET TO BE INSTALLED AT 17" ABOVE FINISHED FLOOR.
6. INSTALL TRIP LEVERS ON WIDE SIDE OF ADA TOILET STALL AND INSTALL SEAT PER ADA REQUIREMENTS.
7. PROVIDE GRID DRAIN WITH ADA WHEELCHAIR OFFSET DRAIN WITH P-TRAP AND WASTE ARM.
8. PROVIDE ANGLE STOPS WITH WHEEL HANDLES WITH FLEXIBLE SEAMLESS COPPER TUBE SUPPLIES.
9. SET FLUSH AND LEVEL WITH FINISHED SURFACES. COORDINATE LOCATION WITH ARCHITECTURAL AND CARWASH DRAWINGS.
10. PROVIDE P-TRAP AND WASTE ARM.
11. MANUFACTURER TO CERTIFY UNIT TO BE LEAD FREE AS DEFINED BY THE SAFE DRINKING WATER ACT.
12. PROVIDE IN-WALL MOUNTING PLATE CARRIER ACCESSORY.
13. INSTALL FIXTURE'S SPOUT HEIGHT(S) AS REQUIRED PER ADA REQUIREMENTS.
14. ELECTRICAL LOAD = 115V/1ø, 1.0 FLA.
15. INSTALL MOP SERVICE BASIN ON A MORTAR BED.
16. INSTALL CHECK VALVES ON BOTH HOT AND COLD WATER LINES TO FAUCET.
17. PROVIDE FAUCET MOUNTED AT 40" ABOVE FINISHED FLOOR.
18. PROVIDE BUCKET HOOK AND WALL BRACE. MOUNT HOSE AND MOP HANGER OVER MOP SERVICE BASIN.
19. PROVIDE COMBINATION LEVELING STRAPS/ANCHOR TABS TO BE SECURED TO TRENCH AND OVERLAPPING JOINTS.

GAS PIPE SCHEDULE (IFGC EQ 4-2)

- PRESSURE AVAILABLE = 2 PSI
- MAXIMUM ALLOWABLE PRESSURE DROP = 1.5 PSI
- TOTAL EQUIVALENT LENGTH (LONGEST RUN) = 170 FT

PIPE SIZE	PIPE CAPACITY (CFH)
1/2"	424
3/4"	886
1"	1669
1-1/4"	3427
1-1/2"	5134

DOMESTIC WATER PIPE SIZING CALCULATIONS

- PRESSURE AVAILABLE AT METER = 108 PSI
- STATIC HEAD = 12 FT. x 0.43 = 5.16 PSI
- REQUIRED FIXTURE PRESSURE = 25 PSI
- METER, PRV, BACKFLOW PREVENTER(S) LOSSES = 23 PSI
- REMAINING AVAILABLE PRESSURE FOR FRICTION LOSS CALCULATION = 55 PSI
- TOTAL EQUIVALENT LENGTH (LONGEST RUN) = 250 FT X 20% FITTING LENGTH FACTOR = 250 FT
- ALLOWABLE FRICTION LOSS/100FT.= (55 x 100)/250 = 18.33 PSI/100 FT.
- SIZING CRITERIA = 18 PSI/100 FT. (NOT TO EXCEED 8 FPS) AND FAIRLY ROUGH COPPER PIPING

Pipe Size	Max. Flow (GPM)	Flush Tank Fixture Units	Flush Valve Fixture Units	Velocity (FPS)
1/2"	3.5	1.3	–	5.3
3/4"	9.0	4.7	–	6.8
1"	19.0	18.5	–	7.8
1 1/4"	30.0	53.1	–	8.0
1 1/2"	46.0	111.1	–	8.0
2"	74.0	245.0	–	8.0

3 CONSULTING ENGINEERS
1415 Park Ave. W., Denver, CO 80205
p 303.357.1998
3consultingengineers.com

COLORADO LICENSED — BRUCE PACHNANDA — 51373 — PROFESSIONAL ENGINEER
2023-01-18

3 CONSULTING ENGINEERS

JESSE GOLDMAN, ARCHITECT
2696 S COLORADO BLVD. SUITE 525
DENVER, CO 80222
(303) 962-9164

THESE DRAWINGS AND SPECIFICATIONS, AS INSTRUMENTS OF SERVICE, ARE AND SHALL REMAIN THE PROPERTIES OF CSHQA. THEY ARE NOT TO BE USED ON THE PROJECT FOR WHICH THEY ARE MADE IS EXECUTED OR FOR ANY OTHER PROJECT EXCEPT BY AGREEMENT WITH CSHQA. NOT BE USED BY ANY PERSON OR ENTITY ON OTHER PROJECTS, FOR ADDITIONS TO THIS PROJECT, OR FOR COMPLETION OF THIS PROJECT WHEN PHASES WITHOUT THE WRITTEN CONSENT OF CSHQA. PC 04/19
© COPYRIGHT CSHQA AFFILIATES

CSHQA

QUICK N CLEAN CAR WASH
PARKER RD. & PINE LANE AVE.
PARKER, CO 80134

2696 S COLORADO BLVD, SUITE 525
DENVER, CO 80222
(303) 962-9164
www.cshqa.com

PROJECT	DATE
20037	1-16-2023
DRAWN	CHECKED
JCB	JCB

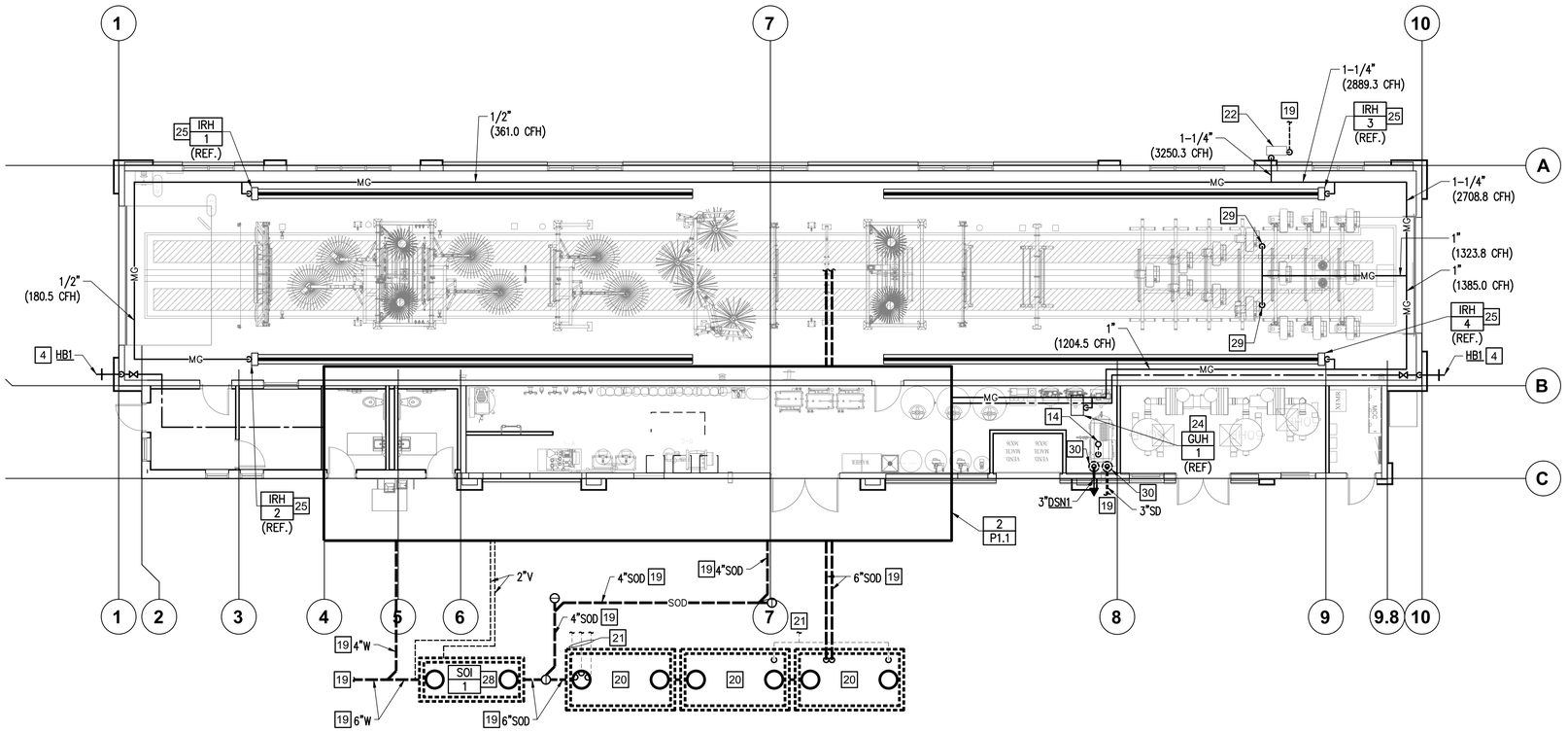
REVISED

SHEET TITLE
PLUMBING SCHEDULES

SHEET
P0.2

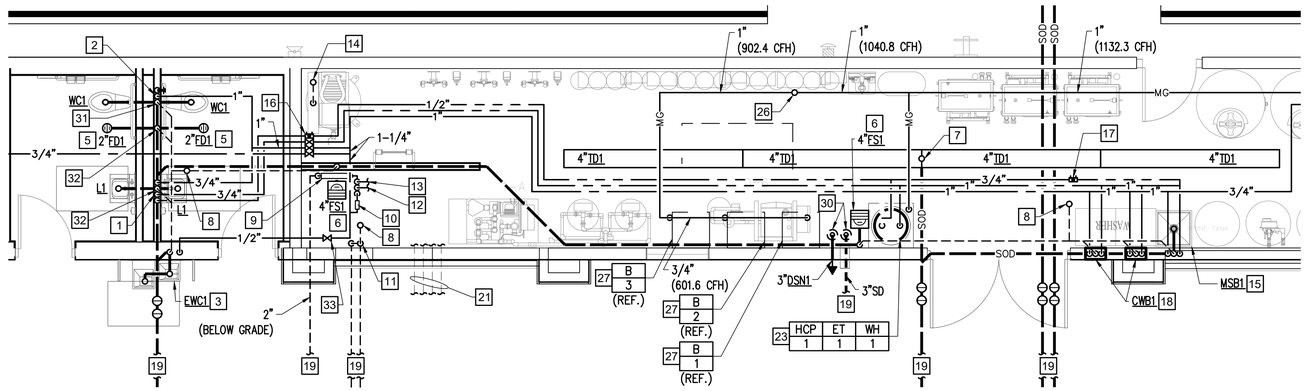
PLUMBING NOTES

1. 3/4" HOT AND COLD WATER DOWN IN WALL. EXTEND 1/2" HOT AND COLD WATER PIPING TO EACH LAVATORY WITH 2" WASTE DOWN AND 2" VENT UP IN WALL. CONNECT TO LAVATORY MIXING VALVE AS REQUIRED PER DETAIL B/P2.1. 1/2" HOT WATER RECIRC UP IN WALL FROM HOT WATER CONNECTION AS REQUIRED PER SECTION SECTION C404.5 OF THE 2021 INTERNATIONAL ENERGY CONSERVATION CODE.
2. 1" COLD WATER DOWN IN WALL. EXTEND 3/4" COLD WATER PIPING TO EACH WATER CLOSET WITH 4" WASTE DOWN AND 2" VENT PIPING UP IN WALL.
3. 1/2" COLD WATER DOWN IN WALL TO ELECTRIC WATER COOLER WITH 2" WASTE DOWN IN WALL, 2" VENT UP.
4. 3/4" COLD WATER DOWN IN WALL TO HOSE BIBB.
5. 2" FLOOR DRAIN. SEE DETAIL E/P2.1.
6. 4" FLOOR SINK WITH 4" WASTE DOWN, 2" VENT UP IN WALL. SEE DETAIL F/P2.1.
7. 4" SAND/OIL WASTE DOWN FROM TRENCH.
8. 3" VENT UP. SEE SHEET P1.2 FOR CONTINUATION.
9. SEE DOMESTIC WATER ENTRY DETAIL A/P2.1.
10. PROVIDE 1-1/4" LEAD-FREE WATTS MODEL #LF009-QT REDUCED PRESSURE PRINCIPLE TYPE BACKFLOW PREVENTER AND WATTS #909AGC REGULATOR AIR GAP. PROVIDE FULL SIZE DISCHARGE PIPING TO FLOOR SINK WITH AIR GAP.
11. TWO (2) 2" VENTS UP FROM BELOW GRADE EACH WITH CLEANOUT IN VERTICAL. COMBINE TO (1) 3" HORIZONTAL VENT AND EXTEND TO ABOVE CEILING.
12. 2" COLD WATER PIPING FOR CAR WASH SYSTEM. SEE CAR WASH DRAWINGS FOR CONTINUATION.
13. EXTEND 3/4" COLD WATER FILL PIPING TO SNOWMELT SYSTEM. SEE MECHANICAL DRAWINGS FOR CONTINUATION.
14. CONNECT 2" OUTSIDE AIR INTAKE TO AIR COMPRESSOR FROM OUTSIDE AIR INTAKE PIPE THROUGH ROOF WITH GOOSENECK FITTING. INSTALL PER EQUIPMENT INSTALLATION INSTRUCTIONS.
15. 3/4" HOT AND COLD WATER DOWN IN WALL TO MOP SERVICE BASIN WITH 3" SAND/OIL WASTE DOWN IN WALL, 2" VENT UP.
16. SET BALANCING VALVE TO 0.5 GPM.
17. SET BALANCING VALVE TO 1.0 GPM.
18. 3/4" HOT AND COLD WATER DOWN IN WALL TO CLOTHES WASHER BOX. EXTEND PIPING TO APPLIANCE'S (PROVIDED BY OTHERS) HOT, COLD AND WASTE CONNECTIONS AS REQUIRED PER MANUFACTURER'S RECOMMENDATIONS. PROVIDE 2" SAND/OIL WASTE DOWN AND 2" VENT UP IN WALL. SEE CLOTHES WASHER DETAIL A/P0.2.
19. SEE CIVIL FOR CONTINUATION.
20. RECLAIM TANKS PROVIDED BY OTHERS (SHOWN FOR REFERENCE ONLY). COORDINATE FINAL LOCATION OF RECLAIM TANK(S) WITH ARCH, CIVIL AND CARWASH DRAWINGS.
21. RECLAIM PIPING (BELOW GRADE) TO/FROM RECLAIM TANK(S) TO RECLAIM PUMP/SYSTEM. COORDINATE ROUTING AND SIZING OF PIPING WITH CARWASH VENDOR DRAWINGS. CONNECT TO EQUIPMENT AS REQUIRED PER MANUFACTURER'S INSTALLATION INSTRUCTIONS.
22. NEW GAS METER FOR NEW CONNECTED GAS LOAD (2,701,000 BTU). SET OUTLET GAS PRESSURE TO 2 PSI. COORDINATE ALL WORK WITH UTILITY COMPANY AS REQUIRED.
23. 1/2" MEDIUM PRESSURE GAS PIPING CONNECTION DOWN TO WATER HEATER. PROVIDE GAS SHUT OFF VALVE, GAS PRESSURE REGULATOR, UNION AND 6" DIRT LEG, AS REQUIRED (91.5 CFH). SEE WATER HEATER DETAIL G/P2.1.
24. 1/2" MEDIUM PRESSURE GAS PIPING CONNECTION DOWN TO UNIT HEATER. PROVIDE GAS SHUT OFF VALVE GAS PRESSURE REGULATOR. UNION AND 6" DIRT LEG, AS REQUIRED (72.2 CFH).
25. 1/2" MEDIUM PRESSURE GAS PIPING CONNECTION DOWN TO INFRARED HEATER. PROVIDE GAS SHUT OFF VALVE, GAS PRESSURE REGULATOR, UNION AND 6" DIRT LEG, AS REQUIRED (180.5 CFH).
26. 1/2" MEDIUM PRESSURE GAS PIPING UP THROUGH ROOF. SEE SHEET P1.2 FOR CONTINUATION.
27. 3/4" MEDIUM PRESSURE GAS PIPING FOR SNOWMELT SYSTEM. SEE MECHANICAL DRAWINGS FOR CONTINUATION. EXTEND AND CONNECT 3/4" MG PIPING TO EACH BOILER WITH GAS SHUT OFF VALVE, GAS PRESSURE REGULATOR, UNION AND 6" DIRT LEG (300.8 CFH), AS REQUIRED. ROUTE CONDENSATE PIPING THROUGH CONDENSATE NEUTRALIZERS PRIOR TO DRAINING TO FLOOR SINK WITH AIR GAP. CONNECT PIPING TO EACH BOILER AS REQUIRED PER MANUFACTURER'S INSTALLATION INSTRUCTION.
28. PROVIDE SAND/OIL INTERCEPTOR PER DETAIL C/P2.1. COORDINATE FINAL LOCATION OF SAND/OIL INTERCEPTOR WITH ARCH, CIVIL AND CARWASH DRAWINGS.
29. 3/4" MEDIUM PRESSURE GAS PIPING DOWN TO CAR WASH HEATER (PROVIDED BY OTHERS). PROVIDE GAS SHUT OFF VALVE, GAS PRESSURE REGULATOR, UNION AND 6" DIRT LEG (661.9 CFH). CONNECT PIPING TO HEATER AS REQUIRED PER MANUFACTURER'S INSTALLATION INSTRUCTIONS.
30. 3" STORM/OVERFLOW STORM DRAIN PIPING DOWN THROUGH ROOF. EXTEND STORM PIPING DOWN ALONG WALL WITH CLEANOUT IN VERTICAL TO BELOW GRADE. EXTEND OVERFLOW STORM PIPING DOWN ALONG WALL WITH CLEANOUT IN VERTICAL TO DOWNSPOUT NOZZLE.
31. COMMON 4" WASTE DOWN AND COMMON 2" VENT PIPING UP IN WALL.
32. COMMON 2" WASTE DOWN AND COMMON 2" VENT PIPING UP IN WALL.
33. PROVIDE SHUT-OFF VALVE WITH DRAIN PORT AND AIR COMPRESSOR FITTING FOR WINTERIZING. SLOPE PIPING TO DRAIN VALVE AS REQUIRED.



1 PLUMBING FLOOR PLAN

1/8" = 1'-0"



2 PLUMBING ENLARGED FLOOR PLAN

1/4" = 1'-0"

GENERAL NOTES

- REFER TO CAR WASH VENDOR'S DETAILS, SHOP DRAWINGS AND SPECIFICATIONS FOR ADDITIONAL INFORMATION REQUIRED FOR MATERIALS, INSTALLATION OF ALL EQUIPMENT AND PIPING SYSTEMS.

COLORADO LICENSED
BRUCE PACHINGER
51373
PROFESSIONAL ENGINEER
2023-01-18

3 CONSULTING ENGINEERS
JESSE GOLDMAN, ARCHITECT
2696 S COLORADO BLVD, SUITE 525
DENVER, CO 80222
(303) 962-9164

THESE DRAWINGS AND SPECIFICATIONS, AS INSTRUMENTS OF SERVICE, ARE AND SHALL REMAIN THE PROPERTY OF 3 CONSULTING ENGINEERS WHETHER THE PROJECT FOR WHICH THEY ARE MADE IS EXECUTED OR NOT. THE DRAWINGS AND SPECIFICATIONS SHALL NOT BE USED BY ANY PERSON OR ENTITY ON OTHER PROJECTS, FOR ADDITIONS TO THIS PROJECT, OR FOR COMPLETION OF THIS PROJECT WHEN PHASES WITHOUT THE WRITTEN CONSENT OF 3 CONSULTING ENGINEERS AFFILIATES. Copyright © 2023

QUICK N CLEAN CAR WASH
PARKER RD. & PINE LANE AVE.
PARKER, CO 80134

CSHQA
2696 S COLORADO BLVD, SUITE 525
DENVER, CO 80222
(303) 962-9164
www.cshqa.com

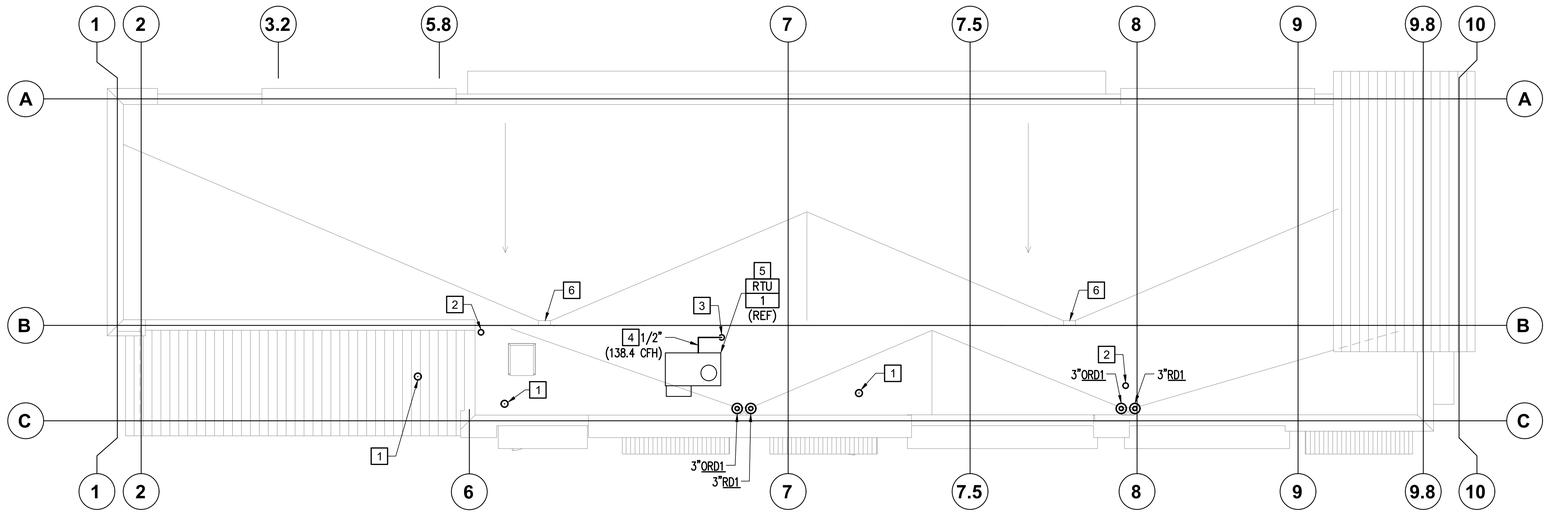
PROJECT	DATE
20037	1-16-2023
DRAWN	CHECKED
JCB	JCB

REVISED

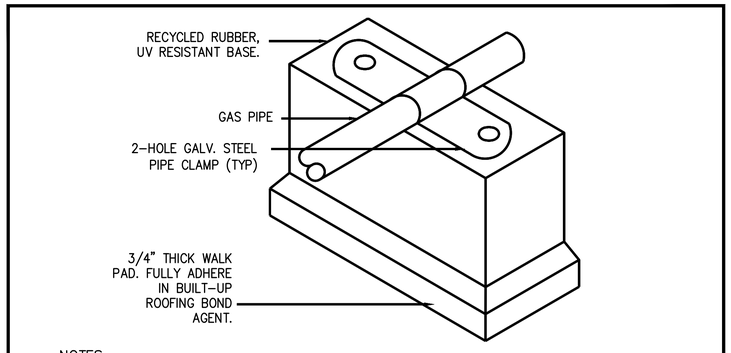
SHEET TITLE
PLUMBING FLOOR PLAN

SHEET
P1.1

3 CONSULTING ENGINEERS
1415 Park Ave. W., Denver, CO 80205
p 303.357.1998
3consultingengineers.com



1 PLUMBING ROOF PLAN
1/8" = 1'-0"



NOTES:
1. BLOCKING SHALL BE INSTALLED A MINIMUM OF 6'-0" ON CENTER AND AT EACH CHANGE OF DIRECTION OF PIPING AND A MINIMUM OF 12" ABOVE ROOF TO TOP OF BLOCKING.
2. FOR ROOF CONSTRUCTION TYPE REFER TO ARCHITECTURAL DRAWINGS.

GAS ROOF SUPPORT — A
NO SCALE

PLUMBING NOTES

1. 3" VTR. MAINTAIN 10' CLEAR FROM ANY BUILDING OPENINGS AND/OR OUTSIDE AIR INTAKES.
2. CONNECT 2" OUTSIDE AIR INTAKE TO AIR COMPRESSOR FROM OUTSIDE AIR INTAKE PIPE THROUGH ROOF WITH GOOSENECK FITTING. INSTALL PER EQUIPMENT INSTALLATION INSTRUCTIONS.
3. 1/2" MEDIUM PRESSURE GAS PIPING UP THROUGH ROOF.
4. SUPPORT GAS PIPING ON ROOF PER DETAIL A THIS SHEET.
5. CONNECT 1/2" MEDIUM PRESSURE GAS PIPING TO ROOFTOP UNIT. PROVIDE GAS SHUT OFF VALVE, GAS PRESSURE REGULATOR, UNION AND 6" DIRT LEG, AS REQUIRED (138.4 CFH).
6. THROUGH SCUPPER (BY OTHERS).

3 CONSULTING ENGINEERS
1415 Park Ave. W., Denver, CO 80205
p 303.357.1998
3consultingengineers.com

COLORADO LICENSED
BRUCE PACHINGER
51373
PROFESSIONAL ENGINEER
2023-01-18

3 CONSULTING ENGINEERS

JESSE GOLDMAN, ARCHITECT
2696 S COLORADO BLVD, SUITE 525
DENVER, CO 80222
(303) 962-9164

THESE DRAWINGS AND SPECIFICATIONS, AS INSTRUMENTS OF SERVICE, ARE AND SHALL REMAIN THE PROPERTY OF ARCHITECT AND SHALL NOT BE USED IN THE PROJECT FOR WHICH THEY ARE MADE IS EXECUTED OR FOR ANY OTHER PROJECT EXCEPT BY AGREEMENT IN WRITING AND WITH APPROPRIATE COMPENSATION TO ARCHITECT. THESE DRAWINGS ARE NOT TO BE USED BY ANY PERSON OR ENTITY ON OTHER PROJECTS, FOR ADDITIONS TO THIS PROJECT, OR FOR COMPLETION OF THIS PROJECT WHEN PHASES WITHOUT THE WRITTEN CONSENT OF ARCHITECT.
AFFILIATES. Copyright © 2023

QUICK N CLEAN CAR WASH
PARKER RD. & PINE LANE AVE.
PARKER, CO 80134

2696 S COLORADO BLVD, SUITE 525
DENVER, CO 80222
(303) 962-9164
www.cshqa.com

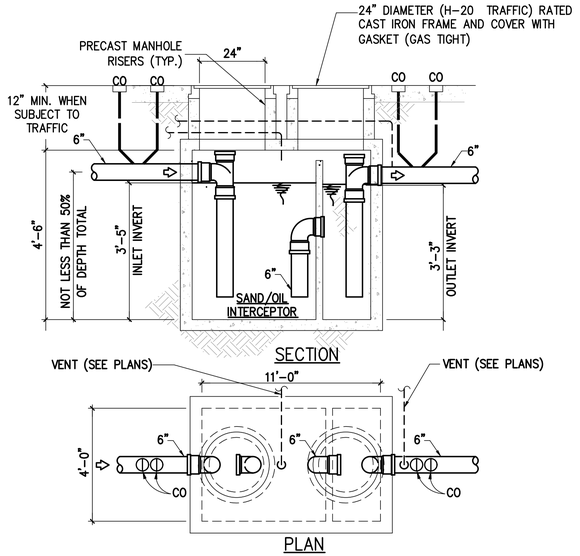
CSHQA

PROJECT	DATE
20037	1-16-2023
DRAWN	CHECKED
JCB	JCB

REVISED

SHEET TITLE
PLUMBING ROOF PLAN

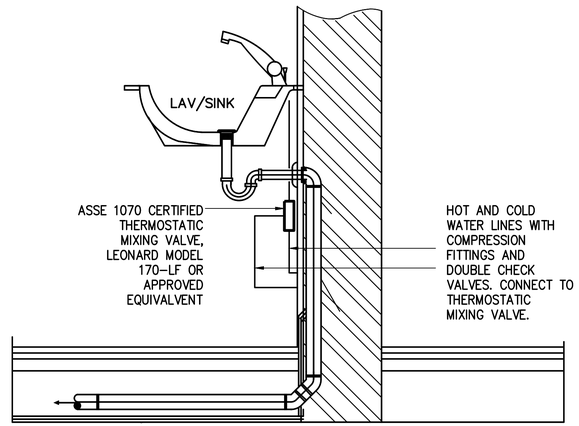
SHEET
P1.2



SAND/OIL INTERCEPTOR

NO SCALE

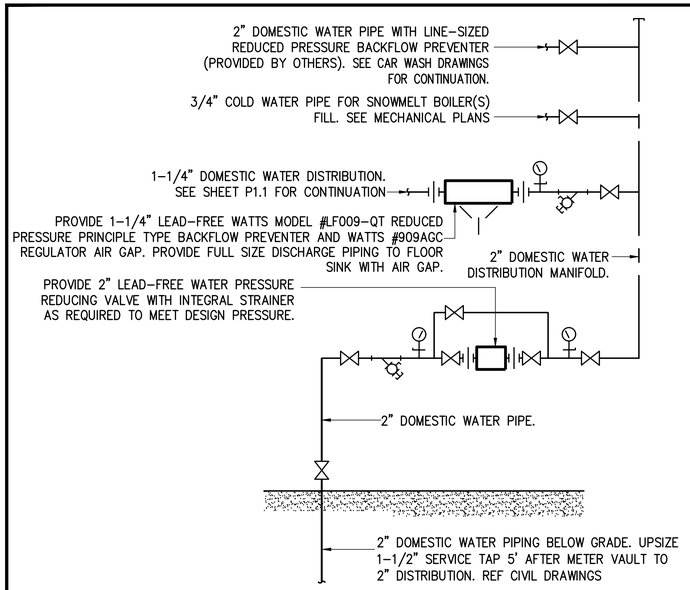
C



MIXING VALVE

NO SCALE

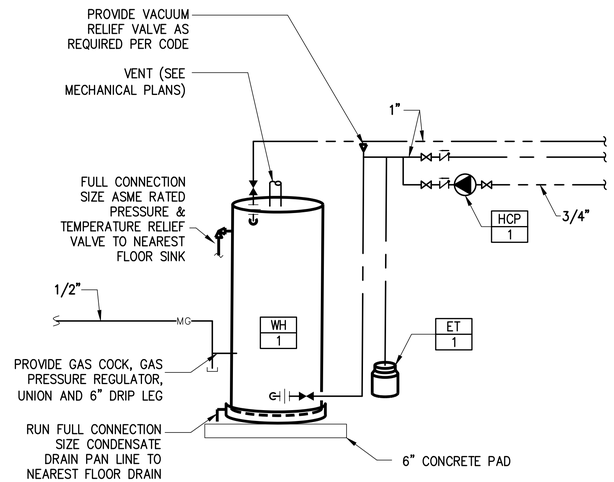
B



DOMESTIC WATER ENTRY

NO SCALE

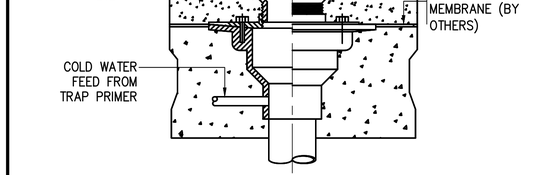
A



GAS WATER HEATER

NO SCALE

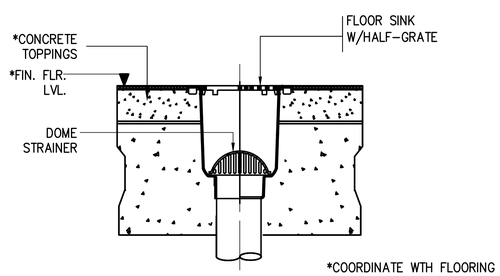
G



FLOOR DRAIN/TRAP PRIMER

NO SCALE

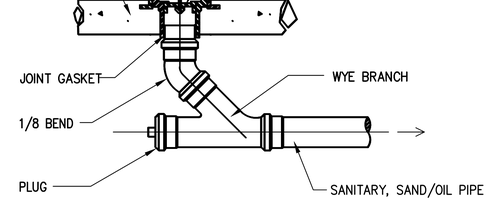
E



FLOOR SINK

NO SCALE

F



FLOOR CLEANOUT

NO SCALE

D

COLORADO LICENSED BRUCE PACHNANDA 51373 PROFESSIONAL ENGINEER

2023-01-18

3 CONSULTING ENGINEERS

JESSE GOLDMAN, ARCHITECT
2696 S COLORADO BLVD, SUITE 525
DENVER, CO 80222
(303) 962-9164

THESE DRAWINGS AND SPECIFICATIONS, AS INSTRUMENTS OF SERVICE, ARE AND SHALL REMAIN THE PROPERTY OF CSHQA. THESE DRAWINGS AND SPECIFICATIONS FOR THE PROJECT FOR WHICH THEY ARE MADE IS EXECUTED THE ARCHITECTURAL WORKS EMBODIED IN THESE DRAWINGS MAY NOT BE USED BY ANY PERSON OR ENTITY ON OTHER PROJECTS EXCEPT BY AGREEMENT IN WRITING WITH CSHQA. COMPLETION OF THIS PROJECT WHEN PHASES WITHOUT THE WRITTEN CONSENT OF CSHQA. © COPYRIGHT CSHQA AFFILIATES. Copyright © 2023

QUICK N CLEAN CAR WASH

PARKER RD. & PINE LANE AVE.

PARKER, CO 80134

2696 S COLORADO BLVD, SUITE 525
DENVER, CO 80222
(303) 962-9164
www.cshqa.com

CSHQA

PROJECT	DATE
20037	1-16-2023
DRAWN	CHECKED
JCB	JCB

REVISED

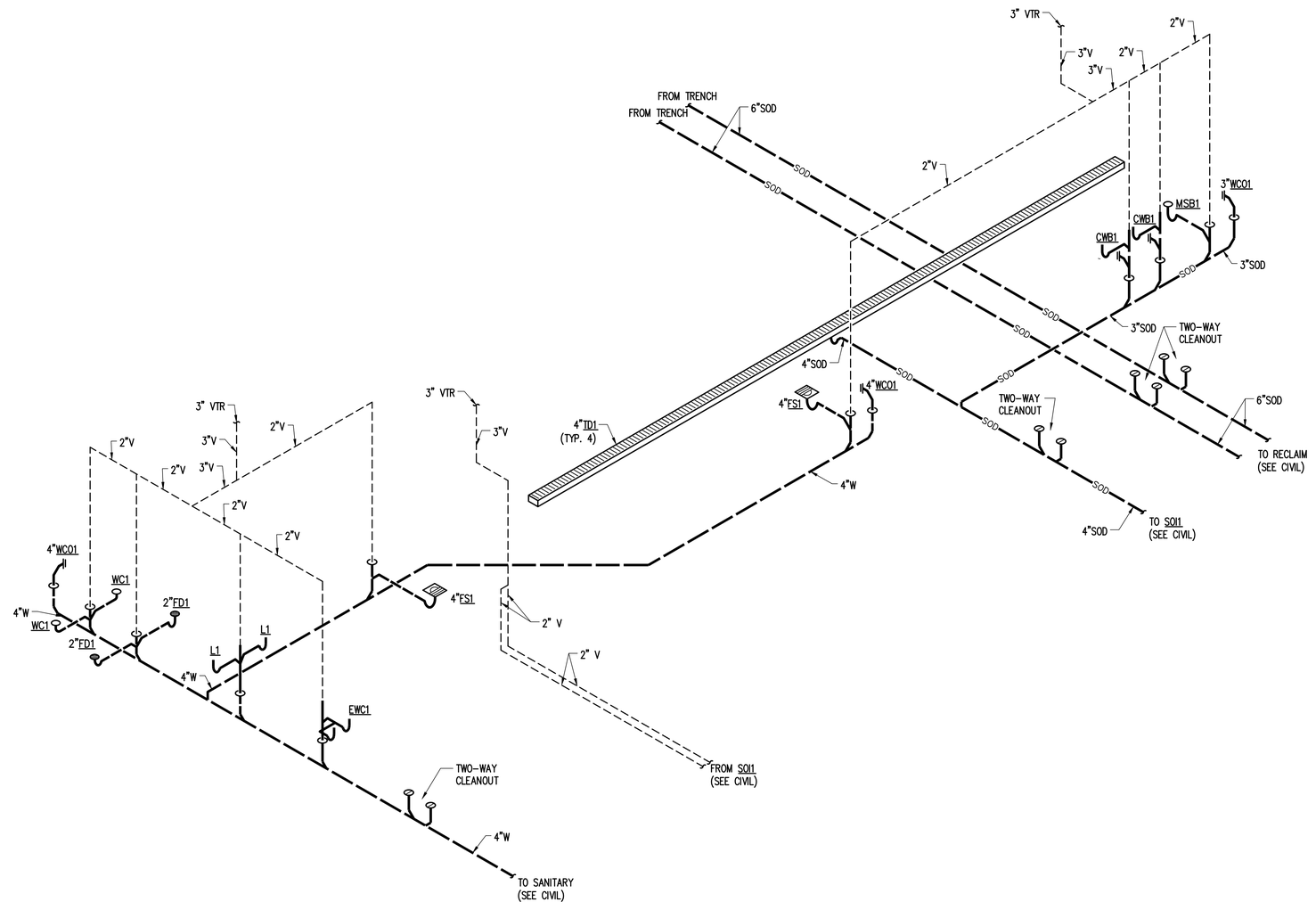
SHEET TITLE

PLUMBING DETAILS

SHEET

P2.1

3 CONSULTING ENGINEERS
1415 Park Ave. W., Denver, CO 80205
p 303.357.1998
3consultingengineers.com



1 PLUMBING WASTE AND VENT ISOMETRIC
NO SCALE

COLORADO LICENSED
BRUCE PACHINGAT
513773
PROFESSIONAL ENGINEER
2023-01-18

3 CONSULTING

JESSE GOLDMAN, ARCHITECT
2696 S COLORADO BLVD, SUITE 525
DENVER, CO 80222
(303) 962-9164

THESE DRAWINGS AND SPECIFICATIONS, AS INSTRUMENTS OF SERVICE, ARE AND SHALL REMAIN THE PROPERTY OF ARCHITECT AND ARE NOT TO BE USED ON THE PROJECT FOR WHICH THEY ARE MADE IS EXECUTED OR THE RIGHTS RESERVED HEREIN ARE RELEASED. THEY ARE NOT BE USED BY ANY PERSON OR ENTITY ON OTHER PROJECTS, FOR ADDITIONS TO THIS PROJECT, OR FOR COMPLETION OF THIS PROJECT WHEN PHASES WITHOUT THE WRITTEN CONSENT OF CSHQA, INC OR ITS AFFILIATES. Copyright © 2023

QUICK N CLEAN CAR WASH

PARKER RD. & PINE LANE AVE.
PARKER, CO 80134

2696 S COLORADO BLVD, SUITE 525
DENVER, CO 80222
(303) 962-9164
www.cshqa.com

CSHQA

PROJECT	DATE
20037	1-16-2023
DRAWN	CHECKED
JCB	JCB

REVISED

SHEET TITLE
PLUMBING ISOMETRIC

SHEET
P2.2

3 CONSULTING ENGINEERS
1415 Park Ave. W., Denver, CO 80205
p 303.357.1998
3consultingengineers.com

MECHANICAL COMCHECK

COMcheck Software Version COMcheckWeb

Mechanical Compliance Certificate

Project Information

Energy Code:	2021 IECC
Project Title:	MECHCCK
Location:	Parker, Colorado
Climate Zone:	5b
Project Type:	New Construction

Construction Site: Owner/Agent: Designer/Contractor:

Additional Efficiency Package(s)
Credits: 10.0 Required 0.0 Proposed

Mechanical Systems List

Quantity System Type & Description

1 RTU-1 (Single Zone):
Heating: 1 each - Central Furnace, Gas, Capacity = 115 kBtu/h
Proposed Efficiency = 80.00% Et, Required Efficiency: 80.00 % Et or 80% AFUE
Cooling: 1 each - Single Package DX Unit, Capacity = 32 kBtu/h, Air-Cooled Condenser, Unknown Economizer
Proposed Efficiency = 15.00 SEER, Required Efficiency = 14.00 SEER
Proposed Part Load Efficiency = 0.00 , Required Part Load Efficiency = 0.00

4 IRH 1-4 (Single Zone w/ PerimeterSystem):
Heating: 1 each - Radiant Heater, Gas, Capacity = 150 kBtu/h
No minimum efficiency requirement applies

1 GUH-1 (Unknown w/ PerimeterSystem):
Heating: 1 each - Unit Heater, Gas, Capacity = 60 kBtu/h
Proposed Efficiency = 80.00% Ec, Required Efficiency: 80.00 % Ec

1 UH-1 (Unknown w/ PerimeterSystem):
Heating: 1 each - Unit Heater, Electric, Capacity = 10 kBtu/h
No minimum efficiency requirement applies

2 BOILER 1 AND BOILER 2:
Heating: Hot Water Boiler, Capacity 399 kBtu/h, Gas, with Waterloop Heat Pump
Proposed Efficiency: 80.00 % Et, Required Efficiency: 80.00 % Et

1 WH-1:
Gas Storage Water Heater, Capacity: 50 gallons, Input Rating: 76 kBtu/h w/ Circulation Pump
Proposed Efficiency: 80.00 % Et, Required Efficiency: 80.00 % Et

Mechanical Compliance Statement

Compliance Statement: The proposed mechanical design represented in this document is consistent with the building plans, specifications, and other calculations submitted with this permit application. The proposed mechanical systems have been designed to meet the 2021 IECC requirements in COMcheck Version COMcheckWeb and to comply with any applicable mandatory requirements listed in the Inspection Checklist.

KYLE SULESKI — Name - Title
Signature
11/18/2022 — Date

COMMISSIONING

THIS BUILDING REQUIRES MECHANICAL AND SERVICE WATER HEATING SYSTEMS COMMISSIONING AND COMPLETION REQUIREMENTS PER INTERNATIONAL ENERGY CONSERVATION CODE SECTION C408. PROVIDE ALL REQUIREMENTS PER THIS SECTION AS REQUIRED BY AUTHORITY HAVING JURISDICTION.

SUBMIT PLAN, DATA COLLECTING WORKSHEETS, AND ALL OTHER REQUIRED DOCUMENTATION FOR REVIEW PRIOR TO PERFORMING WORK TO DESIGN TEAM FOR REVIEW.

MECHANICAL SYMBOLS

SYMBOL DOUBLE	SYMBOL SINGLE	ABBR	DESCRIPTION
HVAC:			RETURN/EXHAUST DUCT UP
			SUPPLY DUCT UP
			OUTSIDE AIR DUCT UP
			SUPPLY DUCT DOWN
			RETURN/EXHAUST DUCT DOWN
			ROUND DUCT DOWN
			ROUND DUCT UP
			DUCT DROP
			TRANSITION–RECT. TO RECT. OR ROUND TO ROUND
			TRANSITION–RECT. TO ROUND
			VANED ELBOW
			CAPPED DUCTWORK
			EXISTING TO BE REMOVED OR RELOCATED
(1L)	(1L)		DUCT W/ INTERNAL LINING 1L= 1" THICK 2L= 2" THICK
		FD	FIRE DAMPER
		FSD	FIRE SMOKE DAMPER. CONTROLLED BY DUCT SMOKE DETECTOR
C	C	FSD (C)	FIRE SMOKE DAMPER. CONTROLLED BY CORRIDOR AREA SMOKE DETECTOR
		MD	MOTORIZED DAMPER
		MVD	MANUAL VOLUME DAMPER W/ LOCKING QUADRANT
Y	Y	VD–Y	VOLUME DAMPER W/YOUNG REGULATOR
		BD	BACKDRAFT DAMPER
			CONICAL TAP
			CONICAL SPIN–IN FITTING W/ MANUAL VOLUME DAMPER
OR			SUPPLY DIFFUSER–4–WAY THROW
			SUPPLY DIFFUSER–3/2/1–WAY THROW
			SLOT DIFFUSER
		RA,EA,TA	RETURN, EXHAUST, TRANSFER GRILLE
			LOW PRESSURE FLEXIBLE DUCT
		AP	CEILING ACCESS PANEL
			FLEXIBLE DUCT CONNECTION

SYMBOLS:		
F / M		SECTION NO. / SECTION VIEW SHEET NO.
F / M1		DETAIL DESIGNATION
F / 1	F–1	EQUIPMENT DESIGNATION
1		SHEET KEY NOTES
	POC	POINT OF CONN. (CONN. NEW TO EXISTING)
T	T	NEW THERMOSTAT
TS		SPACE TEMPERATURE SENSOR
H		SPACE HUMIDISTAT
HS		SPACE HUMIDITY SENSOR
PS		SPACE PRESSURE SENSOR
CD		CARBON DIOXIDE SENSOR
CO		CARBON MONOXIDE SENSOR
NO		NITROGEN DIOXIDE SENSOR
S		DUCT MOUNTED SMOKE DETECTOR
SW		ON/OFF SWITCH SMOKE DETECTOR
MS		MASTER SWITCH OR CONTROLLER
		ARROW INDICATES DIRECTION OF FLOW
UP		RISE IN DIRECTION OF AIRFLOW
DN		DROP IN DIRECTION OF AIRFLOW

ABBREVIATIONS:

(R)	(R)	REMOVE AND RELOCATE
(E)	(E)	EXISTING (PARENTHESIS AROUND ITEM INDICATES IT IS EXISTING)
(N)	(N)	NEW
(ETR)	ETR	EXISTING TO REMAIN
(D)	(D)	DEMOLISH
	NTS	NOT TO SCALE
	AFF	ABOVE FINISHED FLOOR
	BFC	BELOW FINISHED CEILING
	DDC	DIRECT DIGITAL CONTROL
	ESP	EXTERNAL STATIC PRESSURE
	FLA	FULL LOAD AMP.
	FT. W.C.	FEET WATER COLUMN
	OED	OPEN ENDED DUCT
	WMS	WIRE MESH SCREEN

MECHANICAL SHEET INDEX/CODES

JURISDICTION: PARKER, COLORADO

MECHANICAL CODE: 2021 INTERNATIONAL MECHANICAL CODE – PRESCRIPTIVE

FUEL GAS CODE: 2021 INTERNATIONAL FUEL GAS CODE

ENERGY CODE: 2021 INTERNATIONAL ENERGY CONSERVATION CODE – REDUCED LIGHTING METHOD

SHEET NO.	SHEET DESCRIPTION	ISSUE 01/18/23 – PERMIT SET
M0.1	MECHANICAL COVER SHEET	X
M0.2	MECHANICAL SPECIFICATIONS	X
M0.3	MECHANICAL SCHEDULES	X
M0.4	MECHANICAL SNOWMELT SPECIFICATIONS	X
M0.5	MECHANICAL SNOWMELT	X
M0.6	MECHANICAL SNOWMELT	X
M1.0	MECHANICAL SNOWMELT PLAN	X
M1.1	MECHANICAL FLOOR PLAN	X
M1.2	MECHANICAL ROOF PLAN	X
M2.1	MECHANICAL DETAILS	X
M2.2	MECHANICAL DETAILS	X

DESIGN PARAMETERS

ELEVATION: 5827 FT ABOVE SEA LEVEL

WINTER DESIGN: 0° F.

SUMMER DESIGN TEMP DB/WB: 91.4° F/ 59.9° F

DB DESIGN FOR AIR COOLED EQUIPMENT: 101.4° F

GENERAL NOTES

1. READ ENTIRE DRAWINGS SPECIFICATIONS.
2. MECHANICAL CONTRACTOR IS RESPONSIBLE FOR BIDDING ENTIRE SET OF CONTRACT DRAWINGS AND DOCUMENTS NOT JUST THE MECHANICAL SHEETS.
3. ALL HVAC EQUIPMENT REQUIRING POWER SHALL BE VERIFIED WITH ELECTRICAL CONTRACTOR PRIOR TO ORDERING EQUIPMENT. ALL SUBSTITUTIONS OF HVAC EQUIPMENT REQUIRING ELECTRICAL POWER SHALL BE FULL RESPONSIBILITY OF MECHANICAL CONTRACTOR.
4. DUCTWORK LOCATED BELOW 7'–6" IN MECHANICAL ROOMS SHALL BE EQUIPPED W/ PADDING MATERIAL ON ALL CORNERS, EDGES & OTHER SURFACES WHICH MAY BE HAZARDOUS.
5. CONCRETE HOUSEKEEPING PADS SHALL BE LOCATED BY THE MECHANICAL CONTRACTOR AND INSTALLED BY THE GENERAL CONTRACTOR. THE PADS SHALL EXTEND A MINIMUM OF 6" BEYOND EACH SIDE OF THE EQUIPMENT FOOTPRINT.
6. CONTRACTOR SHALL PROVIDE TEMPORARY HEAT AS REQUIRED AND SHALL NOT USE EQUIPMENT TO HEAT OR COOL A SPACE THAT WILL REMAIN IN THE BUILDING AFTER CLOSE OUT OF CONSTRUCTION.
7. ALL TESTS ON EQUIPMENT SHALL BE COMPLETED BEFORE ANY MECHANICAL EQUIPMENT OR PIPING INSULATION IS APPLIED.
8. ALL DUCTWORK, PIPING AND TEMPERATURE CONTROL CONDUIT TO VIBRATING EQUIPMENT SHALL HAVE FLEXIBLE CONNECTORS.

VENTILATION REQUIREMENTS

SEE SHEET M2.1 FOR VENTILATION REQUIREMENTS.

3 CONSULTING ENGINEERS
1415 Park Ave. W., Denver, CO 80205
p 303.357.1998
3consultingengineers.com

COLORADO LICENSED — BRUCE PACHNAR — 51373 — PROFESSIONAL ENGINEER
2023-01-18

3 CONSULTING ENGINEERS

JESSE GOLDMAN, ARCHITECT
2696 S COLORADO BLVD, SUITE 525
DENVER, CO 80222
(303) 962-9164

THESE DRAWINGS AND SPECIFICATIONS, AS INSTRUMENTS OF SERVICE, ARE AND SHALL REMAIN THE PROPERTY OF CSHQA. THESE DRAWINGS AND SPECIFICATIONS FOR THE PROJECT FOR WHICH THEY ARE MADE IS EXECUTED OR PUBLISHED. THE REUSE OF THESE DRAWINGS AND SPECIFICATIONS IS NOT BE USED BY ANY PERSON OR ENTITY ON OTHER PROJECTS, FOR ADDITIONS TO THIS PROJECT, OR FOR COMPLETION OF THIS PROJECT WHEN PHASES WITHOUT THE WRITTEN CONSENT OF CSHQA. ©CSHQA, INC. OR ITS AFFILIATES. Copyright © 2023

QUICK N CLEAN CAR WASH
PARKER RD. & PINE LANE AVE.
PARKER, CO 80134
2696 S COLORADO BLVD, SUITE 525
DENVER, CO 80222
(303) 962-9164
www.cshqa.com

CSHQA

PROJECT	DATE
20037	1-16-2023
DRAWN	CHECKED
JCB	JCB

REVISED

SHEET TITLE
MECHANICAL COVER SHEET

SHEET
M0.1

GENERAL MECHANICAL REQUIREMENTS

DESCRIPTION OF WORK

THIS DIVISION INCLUDES ALL LABOR, MATERIALS, EQUIPMENT, TOOLS, SUPERVISION, START-UP SERVICES, OWNER TRAINING, ETC., INCLUDING ALL INCIDENTAL AND RELATED ITEMS, NECESSARY TO COMPLETE INSTALLATION AND SUCCESSFULLY TEST AND START UP AND OPERATE THE MECHANICAL SYSTEMS INDICATED ON THE DRAWINGS.
THE CONTRACTOR, AND HIS SUBCONTRACTORS AND SUPPLIERS, SHALL INCLUDE IN HIS BID ALL MATERIALS, LABOR, AND EQUIPMENT INVOLVED, IN ACCORDANCE WITH ALL LOCAL CUSTOMS, CODES, RULES, REGULATIONS; AND SECURE COMPLIANCE OF ALL PARTS OF THE SPECIFICATIONS AND DRAWINGS REGARDLESS OF SECTIONAL INCLUSION IN THESE SPECIFICATIONS.
THE CONTRACTOR SHALL BE HELD RESPONSIBLE FOR THE COMPLETE AND SATISFACTORY ACCOMPLISHMENT OF ALL WORK INCLUSIVE OF WHATEVER MISCELLANEOUS MATERIAL AND/OR APPURTENANCES ARE REQUIRED TO PERFECT THE INSTALLATION, AND DEMONSTRATE THAT ALL ELECTRICAL SYSTEMS WILL OPERATE SATISFACTORILY UNDER NORMAL OPERATING CONDITIONS.

DRAWINGS

THE DRAWINGS ARE DIAGRAMMATIC AND SHOW THE GENERAL LOCATION AND ARRANGEMENT OF EQUIPMENT, PIPING, DUCTWORK AND RELATED ITEMS. THEY SHALL BE FOLLOWED AS CLOSELY AS ELEMENTS OF THE CONSTRUCTION WILL PERMIT. THE CONTRACTOR SHALL PROVIDE/INSTALL ALL MECHANICAL SYSTEMS, AND ASSOCIATED EQUIPMENT, COMPLETE AND INCLUDE ALL NECESSARY OFFSETS, FITTINGS, AND OTHER COMPONENTS REQUIRED DUE TO INTERFERENCES, SPACE CONSTRAINTS, CODE REQUIREMENTS, ETC. AS REQUIRED TO PROVIDE A COMPLETE/FUNCTIONAL SYSTEM.
THE GENERAL MECHANICAL REQUIREMENTS ARE INTENDED TO AUGMENT THE DRAWINGS AND SPECIFICATIONS. SHOULD CONFLICTS OCCUR BETWEEN THE DRAWINGS AND THE SPECIFICATIONS, THE STRICTEST PROVISION SHALL GOVERN. WHERE THERE ARE CONFLICTS OR DIFFERENCES BETWEEN THE DRAWINGS FOR THE VARIOUS TRADES, REPORT SUCH CONFLICTS OR DIFFERENCES TO THE ARCHITECT AND/OR ENGINEER FOR RESOLUTION.
THE CONTRACTOR SHALL EXAMINE THE DRAWINGS OF ALL OTHER TRADES IN ORDER TO VERIFY THE CONDITIONS GOVERNING THE WORK ON THE JOB SITE. ARRANGE WORK ACCORDINGLY, PROVIDING ALL DUCTWORK, PIPING, FITTINGS, TRAPS, VALVES AND ACCESSORIES AS MAY BE REQUIRED TO MEET SUCH CONDITIONS.
DEVIATIONS FROM THE DRAWINGS, WITH THE EXCEPTION OF MINOR CHANGES IN ROUTING AND OTHER SUCH INCIDENTAL CHANGES THAT DO NOT AFFECT THE FUNCTIONING OR SERVICEABILITY OF THE SYSTEMS, SHALL NOT BE MADE WITHOUT THE WRITTEN APPROVAL OF THE ARCHITECT AND/OR ENGINEER.
THE ARCHITECTURAL AND STRUCTURAL DRAWINGS TAKE PRECEDENCE IN ALL MATTERS PERTAINING TO THE BUILDING STRUCTURE, MECHANICAL DRAWINGS IN ALL MATTERS PERTAINING TO MECHANICAL TRADES AND ELECTRICAL DRAWINGS IN ALL MATTERS PERTAINING TO ELECTRICAL TRADES. WHERE THERE ARE CONFLICTS OR DIFFERENCES BETWEEN THE DRAWINGS FOR THE VARIOUS TRADES, REPORT SUCH CONFLICTS OR DIFFERENCES TO THE ARCHITECT AND/OR ENGINEER FOR RESOLUTION.

COORDINATION OF WORK

THE CONTRACTOR SHALL VERIFY CLEARANCE REQUIREMENTS OF ALL ELECTRICAL AND MECHANICAL EQUIPMENT/SYSTEMS PRIOR TO THE INSTALLATION OF ANY NEW WORK. MECHANICAL EQUIPMENT,DUCTWORK, SYSTEMS, ETC. SHALL NOT INTERFERE WITH MECHANICAL EQUIPMENT SPACES OR ELECTRICAL CLEARANCES. THE CONTRACTOR SHALL COORDINATE HIS WORK TO OBTAIN SYMMETRY IN CEILING LAYOUTS, SO THAT LIGHTS, GRILLS, ETC. ARE COORDINATED AND ARE INSTALLED PER THE ARCHITECTURAL REFLECTED CEILING PLAN AND INTERIOR ELEVATIONS.
THE CONTRACTOR AND HIS SUBCONTRACTORS SHALL BE RESPONSIBLE FOR ALL TASKS APPLICABLE TO THEIR WORK IN ACCORDANCE WITH THE SPECIFICATIONS, DRAWINGS, AND CODE REQUIREMENTS, AND SHALL BE RESPONSIBLE FOR COORDINATING LOCATIONS AND ARRANGEMENTS OF THEIR WORK TO GIVE BEST RESULTS WITH ALL OTHER RELEVANT TRADES.
COORDINATE ALL WALL, ROOF, FLOOR PENETRATIONS, EQUIPMENT PADS, EQUIPMENT LOCATIONS, SYSTEM ROUTINGS, ETC. WITH ARCHITECTURAL AND STRUCTURAL TRADES.
VERIFY REQUIREMENTS OF ALL EQUIPMENT WITH SHOP DRAWING SUBMITTALS PRIOR TO INSTALLATION – NOTIFY ARCHITECT AND/OR ENGINEER OF ANY CONFLICTS BETWEEN SHOP DRAWINGS AND PLANS.
COORDINATE LOCATIONS OF MECHANICAL ITEMS THAT REQUIRE ACCESS (I.E. DAMPER ACTUATORS, EXHAUST FANS,ETC.) WITH REFLECTED CEILING PLAN. ITEMS LOCATED ABOVE HARD NON-ACCESSIBLE CEILINGS SHALL BE PROVIDED WITH ACCESS DOORS AS REQUIRED.
VERIFY CLEARANCE REQUIREMENTS OF ALL ELECTRICAL AND MECHANICAL EQUIPMENT/SYSTEMS PRIOR TO THE INSTALLATION OF ANY NEW WORK. MECHANICAL EQUIPMENT, PIPING, DUCTWORK, SYSTEMS, ETC. SHALL NOT INTERFERE WITH ELECTRICAL EQUIPMENT SPACES. ELECTRICAL CONDUIT AND EQUIPMENT CLEARANCES SHALL NOT INTERFERE WITH MECHANICAL EQUIPMENT SPACES.

INSPECTION OF SITE AND PROJECT DOCUMENTATION

THE CONTRACTOR SHALL VISIT THE SITE AND EXAMINE/VERIFY THE CONDITIONS UNDER WHICH THE WORK MUST BE CONDUCTED BEFORE SUBMITTING PROPOSAL. THE CONTRACTOR SHALL EXAMINE THE DRAWINGS AND SPECIFICATIONS OF ALL OTHER TRADES INCLUDING MECHANICAL, ARCHITECTURAL, STRUCTURAL AND ELECTRICAL.
THE SUBMITTING OF A PROPOSAL IMPLIES THAT THE CONTRACTOR HAS VISITED THE SITE, EXAMINED ALL CONTRACT DOCUMENTS, AND UNDERSTANDS THE CONDITIONS UNDER WHICH THE WORK MUST BE CONDUCTED.
THE CONTRACTOR SHALL NOTIFY THE ARCHITECT AND/OR ENGINEER, PRIOR TO SUBMITTING HIS BID VIA REQUEST FOR INFORMATION (RFI), OF ANY POTENTIAL PROBLEMS THAT HE HAS IDENTIFIED DURING HIS INSPECTION OF THE SITE OR FROM THE REVIEW OF PLANS/SPECIFICATIONS. RFIS MUST BE SUBMITTED AT LEAST 5 WORKING DAYS PRIOR TO BID OPENING.

GENERAL SUPPORT REQUIREMENTS

PROVIDE ALL NECESSARY ANGLE/BRACKETS, HANGERS, OR SUPPLEMENTARY SUPPORTING STEEL AS REQUIRED FOR ADEQUATE SUPPORT FOR ALL PIPING, DUCTWORK, AND EQUIPMENT. SECURE APPROVAL FORM ARCHITECT AND/OR STRUCTURAL ENGINEER, IN WRITING, BEFORE WELDING OR BOLTING TO STEEL FRAMING OR ANCHORING TO CONCRETE STRUCTURE, OR CUTTING/CORING THRU STRUCTURAL SYSTEMS.
WHERE PIPING, DUCTWORK, OR EQUIPMENT IS SUPPORTED OR SUSPENDED FROM CONCRETE CONSTRUCTION, PROVIDE APPROVED CONCRETE INSERTS IN FORMWORK TO RECEIVE HANGER RODS, SUCH AS UNISTRUT OR POWERSTRUT, AND WHERE INSTALLED IN METAL DECK, USE RAMSET OR WELDS AS REQUIRED.
INSTALL MECHANICAL PIPING SYSTEMS WITH ADEQUATE ANCHORS, GUIDES, EXPANSION LOOPS, ETC. AS REQUIRED TO PROVIDE FOR PIPING EXPANSION/CONTRACTION.

GUARANTEE

CONTRACTOR SHALL GUARANTEE THAT ALL LABOR, MATERIALS, AND EQUIPMENT ARE FREE FROM DEFECTS AND AGREES TO REPLACE OR REPAIR ANY PART OF THIS INSTALLATION WHICH BECOMES DEFECTIVE WITHIN A PERIOD OF ONE YEAR FROM THE DATE OF SUBSTANTIAL COMPLETION FOLLOWING FINAL ACCEPTANCE. ACCEPTANCE DATE OF SUBSTANTIAL COMPLETION SHALL BE AS DETERMINED BY THE ARCHITECT AND/OR ENGINEER.
THE CONTRACTOR SHALL FILE WITH THE OWNER ANY AND ALL GUARANTEES FROM THE EQUIPMENT MANUFACTURERS INCLUDING THE OPERATING CONDITIONS AND PERFORMANCE CAPACITIES THEY ARE BASED ON.

CODES, PERMITS AND FEES

REFER ENTIRE SET OF CONTRACT DOCUMENTS, GENERAL CONDITIONS AND SUPPLEMENTARY CONDITIONS.
UNLESS OTHERWISE INDICATED, ALL REQUIRED PERMITS, PLAN REVIEWS, LICENSES, INSPECTIONS, APPROVALS AND FEES FOR MECHANICAL WORK SHALL BE SECURED AND PAID FOR BY THE CONTRACTOR.
ALL WORK SHALL BE EXECUTED IN ACCORDANCE WITH THE MOST CURRENT RULES AND REGULATIONS SET FORTH IN LOCAL AND STATE CODES.
MECHANICAL AND PLUMBING SYSTEMS SHALL BE INSTALLED PER CURRENT JURISDICTIONAL CODES (MICHIGAN MECHANICAL CODE, MICHIGAN PLUMBING CODE, INTERNATIONAL FUEL GAS CODE, MICHIGAN BUILDING CODE, ETC.), CURRENT NFPA CODES (NFPA 101, NFPA 90, ETC.), AND APPLICABLE SECTIONS OF THE MICHIGAN BUILDING CODE.
WHERE THE DRAWINGS AND/OR SPECIFICATIONS INDICATE MATERIALS OR CONSTRUCTION IN EXCESS OF CODE REQUIREMENTS, THE DRAWINGS AND/OR SPECIFICATIONS SHALL GOVERN. IN THE EVENT THAT THE PLANS AND SPECIFICATIONS CONFLICT WITH ANY RULES, REGULATIONS, OR CODES APPLYING, SAID RULES, REGULATIONS AND CODES SHALL GOVERN.

SUBSTITUTION ITEMS REQUIRING PRIOR APPROVAL

ALL ITEMS THAT THE CONTRACTOR PROPOSED TO USE IN THE WORK THAT ARE NOT SPECIFICALLY NAMED IN THE CONTRACT DOCUMENTS MUST BE SUBMITTED FOR REVIEW. SUCH ITEMS MUST BE SUBMITTED IN DUPLICATE TO THE ARCHITECT AND/OR ENGINEER FOR APPROVAL A MINIMUM OF TEN (10) DAYS PRIOR TO BID OPENING. REQUESTS FOR PRIOR APPROVAL MUST BE ACCOMPANIED BY COMPLETE CATALOG INFORMATION, INCLUDING BUT NOT LIMITED TO, MODEL, SIZE, ACCESSORIES, COMPLETE ELECTRICAL INFORMATION AND PERFORMANCE DATA IN THE FORM GIVEN IN THE EQUIPMENT SCHEDULE ON THE DRAWINGS AT STATED DESIGN CONDITIONS. WHERE ITEMS ARE REFERRED TO BY SYMBOLIC DESIGNATIONS ON THE DRAWINGS, ALL REQUESTS FOR PRIOR APPROVAL SHALL BEAR THE SAME DESIGNATIONS.

MATERIAL AND EQUIPMENT MANUFACTURERS

ALL ITEMS OF EQUIPMENT SHALL BE FURNISHED COMPLETE WITH ALL ACCESSORIES NORMALLY SUPPLIED WITH THE CATALOG ITEMS LISTED AND ALL OTHER ACCESSORIES NECESSARY FOR A COMPLETE AND SATISFACTORY OPERATING SYSTEM. ALL EQUIPMENT AND MATERIALS SHALL BE NEW AND SHALL BE STANDARD PRODUCTS OF MANUFACTURERS REGULARLY ENGAGED IN THE PRODUCTION OF PLUMBING, HEATING, VENTILATING AND AIR CONDITIONING EQUIPMENT AND SHALL BE THE MANUFACTURER'S LATEST DESIGN.
IF AN APPROVED MANUFACTURER IS OTHER THAN THE MANUFACTURER USED AS THE BASIS FOR DESIGN, THE EQUIPMENT OF PRODUCT PROVIDED SHALL BE EQUAL IN QUALITY, DURABILITY, APPEARANCE, CAPACITY AND EFFICIENCY THROUGH ALL RANGES OF OPERATION, SHALL CONFORM WITH ARRANGEMENTS AND SPACE LIMITATIONS OF THE EQUIPMENT SHOWN ON THE PLANS AND/OR SPECIFIED, SHALL BE COMPATIBLE WITH THE OTHER COMPONENTS OF THE SYSTEM AND SHALL COMPLY WITH THE REQUIREMENTS FOR SUBSTITUTION ITEMS REQUIRING PRIOR APPROVAL SPECIFIED IN THIS SECTION OF THE SPECIFICATIONS. ALL COSTS TO MAKE THESE ITEMS OF EQUIPMENT COMPLY WITH THESE REQUIREMENTS INCLUDING, BUT NOT LIMITED TO, PIPING, SHEET METAL, ELECTRICAL WORK, AND BUILDING ALTERATIONS SHALL BE INCLUDED IN THE ORIGINAL BID.

OPERATION AND MAINTENANCE INSTRUCTIONAL MANUALS

PROVIDE COMPETE MAINTENANCE AND OPERATING INSTRUCTIONAL MANUALS COVERING ALL MECHANICAL EQUIPMENT AS SPECIFIED HEREIN, DIVISION 1 REQUIREMENTS, AND INDIVIDUAL EQUIPMENT SPECIFICATION SECTIONS.
THE O&M DATA SHALL BE BOUND IN A SUITABLE NUMBER OF 3" OR 4", 3-RING, HARD COVER BINDERS. PERMANENTLY IMPRINTED ON THE COVER SHALL BE THE WORDS, "MANUFACTURER'S OPERATION AND MAINTENANCE DATA", PROJECT TITLE, LOCATION OF PROJECT, AND THE DATE. A TABLE OF CONTENTS SHALL BE PROVIDED IN THE FRONT OF EACH BINDER.
MAINTENANCE AND OPERATING INSTRUCTIONAL MANUALS SHALL BE JOB SPECIFIC TO THIS PROJECT. GENERIC MANUALS ARE NOT ACCEPTABLE. EACH PIECE OF EQUIPMENT IN THE O&M MANUAL SHALL BE IDENTIFIED AS IDENTIFIED ON THE PROJECT DRAWINGS (I.E. EXHAUST FAN EF-1, ETC.).
INTERNALLY SUBDIVIDE THE BINDER CONTENTS WITH PERMANENT PAGE DIVIDERS, ORGANIZED BY MAJOR EQUIPMENT/SYSTEMS (I.E. FANS, ETC.)
CONTENTS: EACH VOLUME OF O&M MANUAL SHALL HAVE THREE PARTS:
PART 1: A DIRECTORY LISTING NAMES, ADDRESSES, AND TELEPHONE NUMBERS OF ARCHITECT/ENGINEER, CONTRACTOR, SUBCONTRACTORS, AND MAJOR EQUIPMENT SUPPLIERS.
PART 2: O&M DATA, ARRANGED AND SUBDIVIDED BY MAJOR EQUIPMENT/SYSTEMS. FOR EACH CATEGORY, IDENTIFY NAMES, ADDRESSES, AND TELEPHONE NUMBERS OF SUBCONTRACTORS AND SUPPLIERS:
LIST OF EQUIPMENT.
COPIES OF SHOP DRAWINGS AND PRODUCT DATA, APPROVED BY ARCHITECT/ENGINEER.
INSTALLATION AND OPERATIONAL PROCEDURES.
ROUTINE MAINTENANCE PROCEDURES.
TROUBLE SHOOTING PROCEDURES.
COMPLETE PARTS LISTS BY NOMENCLATURE, MANUFACTURER'S PART NUMBER AND USE.
RECOMMENDED SPARE PARTS LISTS.
LUBRICATION CHART LISTING ALL TYPES OF LUBRICANTS TO BE USED FOR EACH PIECE OF EQUIPMENT AND THE RECOMMENDED FREQUENCY OF LUBRICATION.
COMPLETE WIRING AND SCHEMATIC DIAGRAMS.
ELEVATIONS AND/OR SECTIONS CUT THROUGH ALL OF THE MAJOR EQUIPMENT AND SUB-ASSEMBLIES.
AT THE END OF EACH SECTION, A MAINTENANCE SCHEDULE SHALL BE PROVIDED FOR EACH PIECE OF EQUIPMENT. THE SCHEDULE SHALL DISPLAY THE DAILY, WEEKLY, MONTHLY, SEMI-ANNUAL, AND ANNUAL LUBRICATION AND PREVENTATIVE MAINTENANCE REQUIRED IN ORDER TO MEET WARRANTY CONDITIONS AND THE MANUFACTURER'S RECOMMENDATIONS FOR OPTIMAL PERFORMANCE AND LIFE OF THE EQUIPMENT. PHOTOS OR REPRODUCTION OF THE MANUFACTURER'S LITERATURE WILL NOT BE ACCEPTED.
PART 3: PROJECT DOCUMENTS AND CERTIFICATES, INCLUDING THE FOLLOWING:
WARRANTY CERTIFICATES.
COPIES OF APPROVED CONSTRUCTION PERMITS.
A MINIMUM OF TWO (2) COPIES OF ALL APPROVED OPERATION AND MAINTENANCE LITERATURE SHALL BE FURNISHED TO THE OWNER WITHIN 10 DAYS AFTER FINAL INSPECTION. O&M MANUALS MUST BE COMPLETED PRIOR TO START OF OWNER TRAINING AS THE MANUALS SHALL BE USED AS THE BASIS OF THE TRAINING.

SHOP DRAWINGS/SUBMITTALS

REFER TO GENERAL CONDITIONS AND SUPPLEMENTARY GENERAL CONDITIONS.
ALL SHOP DRAWINGS SHALL BE SUBMITTED IN GROUPINGS OF SIMILAR AND/OR RELATED ITEMS. INCOMPLETE SUBMITTAL GROUPINGS WILL BE RETURNED UNCHECKED.
UNLESS NOTED OTHERWISE, SUBMIT DIGITAL (.PDF FORMAT) COPIES OF COMPLETE MANUFACTURER'S SHOP DRAWINGS FOR ALL EQUIPMENT, VALVES, PLUMBING AND HEATING SPECIALTIES, REFRIGERATION SPECIALTIES, PIPE HANGERS, WIRING DIAGRAMS AND CONTROL DIAGRAMS. WHERE ITEMS ARE REFERRED TO BY SYMBOLIC DESIGNATION ON THE DRAWINGS AND SPECIFICATIONS, ALL SUBMITTALS SHALL BEAR THE SAME DESIGNATION. REFER TO OTHER SECTIONS OF THE MECHANICAL SPECIFICATIONS FOR ADDITIONAL REQUIREMENTS.

RECORD DRAWINGS

CONTRACTOR SHALL SUBMIT TO THE ARCHITECT AND/OR ENGINEER, RECORD DRAWINGS WHICH HAVE BEEN NEATLY MARKED TO REPRESENT AS-BUILT CONDITIONS FOR ALL NEW MECHANICAL WORK.
THE CONTRACTOR SHALL KEEP ACCURATE NOTE OF ALL DEVIATIONS FROM THE CONSTRUCTION DOCUMENTS AND DISCREPANCIES IN THE CONCEALED CONDITIONS AND OTHER ITEMS OF CONSTRUCTION ON FIELD DRAWINGS AS THEY OCCUR. THE MARKED UP FIELD DOCUMENTS SHALL BE AVAILABLE FOR REVIEW BY THE ARCHITECT AND/OR ENGINEER, AND OWNER AT THEIR REQUEST.

PRODUCTS AND EXECUTION

INSTALLATION OF EQUIPMENT

INSTALL EQUIPMENT IN STRICT ACCORDANCE WITH ALL DIRECTIONS AND RECOMMENDATIONS FURNISHED BY THE MANUFACTURER. WHERE SUCH DIRECTIONS ARE IN CONFLICT WITH THE DRAWINGS AND SPECIFICATIONS, REPORT SUCH CONFLICTS TO THE ARCHITECT AND/OR ENGINEER FOR RESOLUTION.

WORK INVOLVING OTHER TRADES

CERTAIN ITEMS OF EQUIPMENT OR MATERIALS SPECIFIED IN THE MECHANICAL DIVISION MAY HAVE TO BE INSTALLED BY OTHER TRADES DUE TO CODE REQUIREMENTS OR UNION JURISDICTIONAL REQUIREMENTS. IN SUCH INSTANCES, THE CONTRACTOR SHALL COMPLETE THE WORK THROUGH AN APPROVED, QUALIFIED SUBCONTRACTOR AND SHALL INCLUDE THE FULL COST FOR SAME IN HIS BID.

COORDINATION

INSTALL WORK TO AVOID INTERFERENCE WITH WORK OF OTHER TRADES INCLUDING, BUT NOT LIMITED TO, ARCHITECTURAL AND ELECTRICAL TRADES. REMOVE AND RELOCATE ANY WORK THAT CAUSES AN INTERFERENCE AT CONTRACTOR'S EXPENSE. DISPUTES REGARDING THE CAUSE OF AN INTERFERENCE SHALL BE RESOLVED BY THE ARCHITECT AND/OR ENGINEER.

SEALING OF MECHANICAL OPENINGS

SEAL THE SPACE AROUND PIPES IN SLEEVES AND AROUND DUCT OPENINGS THROUGH WALLS, FLOORS AND CEILINGS.
PROVIDE ADEQUATE CLEARANCE TO ALLOW FOR PROPER DUCT/PIPE MOVEMENT AND SEALING.
PROVIDE/INSTALL FIREPROOF WALL AND FLOOR SLEEVES AS REQUIRED BY APPLICABLE BUILDING CODES AT ALL APPLICABLE WALL, CEILING, AND FLOOR PENETRATIONS. REFER TO ARCHITECTURAL PLANS FOR WALL ASSEMBLY RATINGS.

CUTTING, CORING AND PATCHING

REFER TO GENERAL CONDITIONS.
UNLESS SPECIFICALLY NOTED OTHERWISE, THE CONTRACTOR SHALL PERFORM ALL CUTTING, CORING, AND PATCHING THAT MAY BE NECESSARY FOR THE INSTALLATION OF THEIR WORK. ALL CUTTING, CORING, PATCHING AND REPAIR WORK SHALL BE PERFORMED BY THE CONTRACTOR THROUGH QUALIFIED SUBCONTRACTORS. CONTRACTOR SHALL INCLUDE FULL COST OF SAME IN HIS BID.
SECURE APPROVAL FORM ARCHITECT AND/OR STRUCTURAL ENGINEER, IN WRITING, BEFORE CUTTING, WELDING/BOLTING TO, OR ANCHORING FROM ANY STRUCTURAL BUILDING COMPONENTS (I.E. STRUCTURAL STEEL, LOAD BEARING WALLS, FOOTINGS/FOUNDATIONS, CONCRETE FLOORS/CEILINGS, ETC.).

EQUIPMENT CONNECTIONS

MAKE CONNECTIONS TO EQUIPMENT, FIXTURES AND OTHER ITEMS INCLUDED IN THE WORK IN ACCORDANCE WITH THE APPROVED SHOP DRAWINGS AND ROUGH-IN MEASUREMENTS FURNISHED BY THE MANUFACTURES OF THE PARTICULAR EQUIPMENT FURNISHED.

ACCESSIBILITY

ALL EQUIPMENT SHALL BE INSTALLED SO AS TO BE READILY ACCESSIBLE FOR OPERATION, MAINTENANCE, AND REPAIR, AS REQUIRED BY THE EQUIPMENT MANUFACTURER AND AS SUBJECT TO THE APPROVAL OF THE ENGINEER.

CLEANING

EACH TRADE SHALL BE RESPONSIBLE FOR REMOVING ALL DEBRIS DAILY AS REQUIRED TO MAINTAIN THE WORK AREA IN A NEAT, ORDERLY CONDITION.

PAINTING

ALL MECHANICAL SYSTEMS, EQUIPMENT, PIPING, DUCTWORK, ETC. EXPOSED IN FINISHED AREAS SHALL BE PAINTED TO MATCH THE SURROUNDING FINISHES. REFER TO SPECIFICATION SECTION 09900 – COORDINATE COLOR WITH ARCHITECT.

PROTECTION AND HANDLING OF EQUIPMENT AND MATERIALS

ELECTRICAL EQUIPMENT FURNISHED BY MECHANICAL TRADES AND INSTALLED BY ELECTRICAL TRADES SHALL BE TURNED OVER TO ELECTRICAL TRADES IN GOOD CONDITION.
EQUIPMENT AND MATERIALS SHALL BE PROTECTED FROM THEFT, INJURY OR DAMAGE.
PROTECT EQUIPMENT OUTLETS, PIPE AND DUCT OPENINGS WITH TEMPORARY PLUGS OR CAPS.
PROVIDE ADEQUATE STORAGE FOR ALL EQUIPMENT AND MATERIALS DELIVERED TO THE JOB SITE. EQUIPMENT SET IN PLACE IN UNPROTECTED AREAS MUST BE PROVIDED WITH TEMPORARY PROTECTION.

GENERAL SUPPORT REQUIREMENTS

EACH MECHANICAL TRADE SHALL PROVIDE ALL REQUIRED SUPPORTING COMPONENTS TO PROPERLY SUPPORT THEIR WORK. SUPPORTING COMPONENTS/SYSTEMS SHALL BE IN ACCORDANCE WITH CODE AND AS SPECIFIED.
PROVIDE ALL NECESSARY ANGLE/BRACKETS OR SUPPLEMENTARY STEEL AS REQUIRED FOR ADEQUATE SUPPORT FOR ALL PIPING, DUCTWORK, SPECIALTIES, AND EQUIPMENT. SECURE APPROVAL FORM ARCHITECT AND/OR ENGINEER, IN WRITING, BEFORE WELDING OR BOLTING TO STEEL FRAMING OR ANCHORING TO CONCRETE STRUCTURE.

DRAWINGS AND MEASUREMENTS

THESE SPECIFICATIONS AND ACCOMPANYING DRAWINGS ARE INTENDED TO DESCRIBE AND PROVIDE FOR FINISHED WORK. THEY ARE INTENDED TO BE COOPERATIVE, AND WHAT IS CALLED FOR BY EITHER THE DRAWINGS OR SPECIFICATIONS SHALL BE AS BINDING AS IF CALL FOR BY BOTH. THE WORK HEREIN DESCRIBED SHALL BE COMPLETE IN EVERY DETAIL.
THE DRAWINGS ARE NOT INTENDED TO BE SCALED FOR ROUGH-IN MEASUREMENTS, NOR TO SERVE AS SHOP DRAWINGS. FIELD MEASUREMENTS NECESSARY FOR ORDERING MATERIALS AND FITTING THE INSTALLATION TO THE BUILDING CONSTRUCTION AND ARRANGEMENT SHALL BE TAKEN BY THE CONTRACTOR. THE CONTRACTOR SHALL CHECK LATEST ARCHITECTURAL DRAWINGS TO LOCATE EQUIPMENT/FIXTURES/ETC., CHECK LATEST STRUCTURAL DRAWINGS FOR INTERFERENCES, ETC..

EXTRA WORK

FOR ANY EXTRA WORK WHICH MAY BE PROPOSED, THE CONTRACTOR SHALL FURNISH TO THE GENERAL CONTRACTOR/CONSTRUCTION MANAGER, AN ITEMIZED BREAKDOWN OF THE ESTIMATED COST OF ALL MATERIALS AND LABOR REQUIRED TO COMPLETE THIS WORK. THE ESTIMATE COST BREAKDOWN SHALL INCLUDE UNIT PRICES (SAME PRICES FOR INCREASE/DECREASE OF WORK) FOR ALL MATERIALS (I.E. DUCT, PIPING, VALVES, EQUIPMENT, EQUIPMENT RENTAL, ETC.) AND ALL LABOR (I.E. MANHOURS, OVERTIME, ETC.) WHICH MAY BE REQUIRED FOR ANY PROPOSED EXTRA WORK. THE CONTRACTOR SHALL NOT PROCEED UNTIL RECEIVING A WRITTEN ORDER FROM THE GENERAL CONTRACTOR ESTABLISHING THE AGREED PRICE AND DESCRIBING THE WORK TO BE DONE.

TESTING AND BALANCING AIR DISTRIBUTION SYSTEMS

PROVIDE AND SUBMIT AN INDIVIDUAL REPORT FOR EACH PIPING SYSTEM. REPORTS SHALL BE SUBMITTED TO THE ARCHITECT AND SHALL INCLUDE DATA ON TESTS USING AABC FORMS. REPORTS SHALL INCLUDE FAN CURVES FOR THE FINAL SPEEDS DEVELOPED FROM THE FAN MANUFACTURER'S PERFORMANCE TEST DATA FOR ALL FANS 1 HP AND ABOVE. PROVIDE A 11x17 REDUCED SET OF DRAWINGS SHOWING ALL EQUIPMENT, FLOW DEVICES, TERMINALS MARKED THAT CORRESPONDS TO WRITTEN REPORT.

ALL PIPING SYSTEMS INSTALLED OR REVISED UNDER THIS CONTRACT SHALL BE BALANCED UNDER THIS CONTRACT. THE MECHANICAL CONTRACTOR SHALL PROCURE THE SERVICES OF AN INDEPENDENT TESTING AND BALANCING AGENCY AND SHALL NOT ENGAGED IN ENGINEERING DESIGN OR A DIVISION OF THE MECHANICAL CONTRACTOR ENTITY. THE TESTING AND BALANCING AGENCY FIRM SHALL BE AABC OR NEBB CERTIFIED AND SHALL HAVE HAD EXPERIENCE ON SIMILAR SIZED PROJECTS AND INCLUDED AS PART OF THEIR QUALIFICATIONS SUBMITTED TO THE ARCHITECT FOR REVIEW AND APPROVAL.

THE FOLLOWING WORK SHALL BE INCLUDED UNDER THIS CONTRACT:

SUPERVISE AND PERFORM THE BALANCING OF PIPING SYSTEMS TO ACHIEVE THE GPM QUANTITIES SPECIFIED FOR EACH ZONE VALVE AND LOOP VALVE.

REPORT AND ATTEMPT TO SOLVE ANY NOISE ISSUES DURING TESTING AND BALANCING WITHOUT REDUCING AIRFLOW OR INCREASING AIRFLOWS GREAT THAN PERCENT LISTED ABOVE.

A SATISFACTORY REPORT SHALL BE RECEIVED BEFORE CONSIDERING THE PROJECT SUBSTANTIALLY COMPLETE. THE TESTING AND BALANCING CONTRACTOR SHALL CORRECT ALL DEFICIENCIES WITHIN 7 BUSINESS DAYS OF RECEIVING THE ENGINEER'S REPORT. FAILURE TO COMPLY WILL RESULT IN HOLDING RETAINAGE OF THE FINAL PAYMENT UNTIL SATISFACTION OF ENGINEER.

BALANCE REPORT SHALL BE ON SITE AND ACCESSIBLE TO THE INSPECTOR AT THE TIME OF FINAL MECHANICAL INSPECTION. NO EXCEPTIONS

RADIANT FLOOR HYDRONIC PIPING

SUBMITTALS:
PRODUCT DATA: PROVIDE MANUFACTURER'S PRODUCT SUBMITTAL DATA, INCLUDING PRESSURE AND TEMPERATURE RATING, OXYGEN-BARRIER PERFORMANCE, AND FIRE-PERFORMANCE CHARACTERISTICS.

SHOP DRAWINGS: PROVIDE INSTALLATION DRAWINGS INDICATING: PIPING LAYOUT, SIZE DIMENSION BY INSTALLATION SEGMENT, VAULT LOCATIONS, SUPPORT FIXTURES AND SCHEDULES WITH ALL DETAILS REQUIRED FOR INSTALLATION OF THE SYSTEM.

SAMPLES: SUBMIT SELECTION AND VERIFICATION SAMPLES OF PIPING.

QUALITY ASSURANCE/CONTROL SUBMITTALS
1. TEST REPORTS: UPON REQUEST, SUBMIT TEST REPORTS FROM RECOGNIZED TESTING LABORATORIES.
2. SUBMIT THE FOLLOWING DOCUMENTATION.
   a. MANUFACTURER'S CERTIFICATE STATING THAT PRODUCTS COMPLY WITH SPECIFIED REQUIREMENTS.
   b. MANUFACTURER'S FLOW SCHEDULE FOR THE DISTRIBUTION SYSTEM.
   c. DOCUMENTATION THAT THE INSTALLER IS TRAINED TO INSTALL THE MANUFACTURER'S PRODUCTS.

CLOSEOUT SUBMITTALS: SUBMIT THE FOLLOWING DOCUMENTS.
1. WARRANTY DOCUMENTS SPECIFIED HEREIN.
2. OPERATION AND MAINTENANCE DATA.
3. MANUFACTURER'S FIELD REPORTS SPECIFIED HEREIN.
4. FINAL AS-BUILT PIPING LAYOUT DRAWING.

QUALITY ASSURANCE
A. INSTALLER QUALIFICATIONS: INSTALLER SHALL HAVE SUCCESSFULLY COMPLETED THE UPONOR COMMERCIAL PIPING SYSTEMS TRAINING COURSE (FORMERLY UPONOR AQUAPEX CERTIFICATION) AND IS ABLE TO PROVIDE PROOF/VERIFICATION. COURSE SHALL BE CONDUCTED BY THE MANUFACTURER OR A MANUFACTURER'S REPRESENTATIVE.

1. REGULATORY REQUIREMENTS AND APPROVALS: ENSURE THE PIPING DISTRIBUTION SYSTEM COMPLIES WITH ALL APPLICABLE CODES AND REGULATIONS.
2. CERTIFICATIONS: PROVIDE LETTERS OF CERTIFICATION INDICATING: INSTALLER USES SKILLED WORKERS HOLDING A TRADE QUALIFICATION LICENSE OR EQUIVALENT, OR APPRENTICES UNDER THE SUPERVISION OF A LICENSED TRADES PERSON.

1DELIVERY, STORAGE AND HANDLING
A. COMPLY WITH MANUFACTURER'S ORDERING INSTRUCTIONS AND LEAD-TIME REQUIREMENTS TO AVOID CONSTRUCTION DELAYS.
C. DELIVERY: DELIVER MATERIALS IN MANUFACTURER'S ORIGINAL, UNOPENED, UNDAMAGED CONTAINERS WITH IDENTIFICATION LABELS INTACT.
D. STORAGE AND PROTECTION: STORE MATERIALS PROTECTED FROM EXPOSURE TO HARMFUL ENVIRONMENTAL CONDITIONS AND AT TEMPERATURE AND HUMIDITY CONDITIONS RECOMMENDED BY THE MANUFACTURER.
1. STORE PEX TUBING IN CARTONS OR UNDER COVER TO AVOID DIRT OR FOREIGN MATERIAL FROM ENTERING THE TUBING.
2. DO NOT EXPOSE PEX TUBING TO DIRECT SUNLIGHT FOR MORE THAN 30 DAYS. IF CONSTRUCTION DELAYS ARE ENCOUNTERED, COVER THE TUBING TO PREVENT EXPOSURE TO DIRECT SUNLIGHT
3. STORE POTABLE PRE-INSULATED PIPING COILS UNDER COVER TO PREVENT DIRT OR FOREIGN MATERIAL FROM ENTERING THE SERVICE TUBING.
4. DO NOT EXPOSE THE SERVICE PIPE TO DIRECT SUNLIGHT FOR MORE THAN 30 DAYS. IF CONSTRUCTION DELAYS ARE ENCOUNTERED, COVER PIPING THAT IS EXPOSED TO DIRECT SUNLIGHT.

WARRANTY
A. MANUFACTURER'S WARRANTY FOR HYDRONIC PIPING: MANUFACTURER'S STANDARD 25 YEAR WARRANTY FOR PEX-A PIPING AND ASTM F 1960 FITTINGS.
B. MANUFACTURER'S WARRANTY FOR PRE-INSULATED PIPE DISTRIBUTION

PACKAGED ROOFTOP UNIT (NATURAL GAS HEATING – DX COOLING)

MARK	LOCATION/ AREA SERVED	MANUFACTURER MODEL NO.	NOM. TONS	VENTILATION		SUPPLY FAN				HEATING				COOLING							MCA/MOCP	VOLTS/PH/ 60 HZ	MAX. OPER. WEIGHT WITH CURB (lbs.)	OVERALL DIMENSIONS NOT INCLUDING CURB	REMARKS
				MIN DCV OA (CFM)	MAX DCV OA (CFM)	CFM	SUPPLY E.S.P. (IN. WC)	FAN RPM	MIN. MOTOR HP	EAT/LAT (°F)	GAS INPUT (MBH)	GAS OUTPUT AT ALTITUDE (MBH)	STAGES	GROSS TOTAL MBH	SENSIBLE MBH	EAT DB/WB (°F)	LAT DB/WB (°F)	COND. AMBIENT TEMP (°F)	EFFICIENCY (IEER/EER)	STAGES					
RTU 1	ROOF/SEE PLANS	CARRIER 48GC	3	180	180	1200	1.0	1321	1.0	50/116.3	115	70.68	2	31.28	30.0	80/62	54.2/ 53.3	95.0	15.0 SEER	1	21/30	208/3	700	75"L x 44"W x 34"H	1 2 3 4 5 6 7 8 9

1 PROVIDE 14" ROOF CURB AND COORDINATE WITH ROOF SLOPE.

2 24/7 PROGRAMMABLE THERMOSTAT. FAN TO RUN AT ALL TIMES DURING OCCUPIED HOURS.

3 5-YEAR COMPRESSOR WARRANTY

4 FAN MOTORS TO BE PROVIDED WITH NEMA PREMIUM EFFICIENCY MOTORS

5 PROVIDE DRY BULB ECONOMIZER WITH BAROMETRIC RELIEF TO CONTROL BUILDING PRESSURE. PROVIDE MODULATING DAMPER TO CONTROL OUTSIDE AIR.

6 PROVIDE LOUVERED HAIL GUARDS AND MERV 8 FILTERS..

7 FACTORY START-UP

8 FUSED DISCONNECT.

9 NON-POWERED CONVENIENCE OUTLET. MC TO SUPPLY AND EC TO WIRE.

~ ACCEPTED EQUIVALENT MANUFACTURERS: LENNOX, CARRIER, TRANE

AIR DEVICES

MARK	MODEL	TYPE	PATTERN	ACCESSORIES 1	FINISH	REMARKS
CD-1	PRICE-ASCDA	CEILING SUPPLY DIFFUSER	4-WAY	O.B.D.	BY ARCH.	24x24 FACE NECK SIZE ON FLOOR PLANS
CD-2	PRICE-ASCDA	CEILING SUPPLY DIFFUSER	4-WAY	O.B.D.	BY ARCH.	12x12 FACE NECK SIZE ON FLOOR PLANS
ED-1/RD-1	PRICE-APDDR	RET/EXH DIFFUSER	FIXED	O.B.D.	BY ARCH.	NON-DUCTED RETURN PROVIDE RETURN AIR BOOT OR FLEX DUCTWORK WITH 90 DEGREE ELBOW
FG-1	AIRMATE 310 FB	SUPPLY FLOOR GRILLE	FIXED	O.B.D.	BY ARCH.	WIDTH x HEIGHT ON FLOOR PLANS
RG-1	AIRMATE 325	RETURN FLOOR GRILLE	FIXED	O.B.D.	BY ARCH.	WIDTH x HEIGHT ON FLOOR PLANS
SG-1	PRICE-SDGE AL	SPIRAL DUCT SUPPLY REGISTER	ADJ. DOUBLE DEFLECTION	AIR SCOOP	BY ARCH.	-
IL-1	GREENHECK EHH-601	INTAKE LOUVER	FIXED	1/4" WIRE MESH SCREEN	BY ARCH.	STORM RATED, PAINTABLE
EL-1	LOUVER AND DAMPERS EL-63	EXHAUST LOUVER	FIXED	1/4" WIRE MESH SCREEN	BY ARCH.	STORM RATED, PAINTABLE

1 WHERE VOLUME DAMPER ON FLOOR PLAN DRAWING IS SHOWN DO NOT PROVIDE O.B.D. VOLUME DAMPER ON DRAWING TAKES PRECEDENCE.

~EQUAL MANUFACTURER'S: GREENHECK, KRUEGER, METAL-AIRE, TITUS, NAILOR

FANS

MARK	LOCATION/ AREA SERVED	MANUFACTURER MODEL NO.	CFM	ESP	FAN RPM	ELECTRICAL		METHOD OF CONTROL	LBS	REMARKS
						HP	V/PH/60HZ			
EF 1	HUNG/ EQUIPMENT ROOM	GREENHECK/ SQ-140-VG	2000	0.3	1200	0.26	115/1	THERMOSTAT WHEN SPACE GETS 95 DEG OR ABOVE(ADJ.)	100	1 2 5 7 8 9 10
EF 2 / EF 3	CEILING MOUNTED/ UNISEX BATHROOM	GREENHECK/ SP-B150	120	0.35	1050	128 W	115/1	OCCUPANCY SENSOR WITH 5 MINUTE TIME DELAY (ADJ.)	30	1 2 3 4 6

1 PROVIDE FACTORY CONTROLLED DISCONNECT SWITCH

2 BAROMETRIC DAMPER

3 HUNG VIA SPRING ISOLATORS

4 ECM MOTOR

5 WIRING PIGTAIL

6 SPEED CONTROLLER

7 BIRD SCREEN

8 NEMA-4 DISCONNECT SWITCH

9 INTERLOCK WITH MOTORIZED DAMPER AT INTAKE LOUVER. DAMPER FULLY OPEN PRIOR TO ENERGIZING FAN.

10 FAN INLET GUARD

~OR APPROVED EQUAL

INFRARED HEATERS (NATURAL GAS)

MARK	MANUFACTURER/ MODEL NUMBER	LOCATION/SERVICE	STAGES	INPUT AT SEA LEVEL (MBH)	OUTPUT AT ALTITUDE (MBH)	ELECTRICAL DATA		OPERATING WEIGHT (lbs)	DIMENSIONAL DATA	REMARKS
						CURRENT (AMPS)	VOLTAGE/ PHASE			
IRH 1 / IRH 2 / IRH 3 / IRH 4	ROBERTS GORDON HE-150	HUNG/ SEE DRAWINGS	1	150	~	4.8	120/1	305	51"Lx14"Wx10"H	1 2 3 4 5 6 7 8

1 4.6" W.C. TO 14" W.C.

2 HEAT EXCHANGER MADE AND RATED FOR CAR WASH ENVIRONMENTS.

3 24V THERMOSTAT. WALL MOUNTED THERMOSTAT. THERMOSTAT TO BE WATERPROOF AND MOUNTED WITH WATER TIGHT SEALANT.

4 CONNECTIONS FOR BOTH FLUE AND OUTSIDE AIR TO GO UP & THROUGH WALL AND OR/ROOF.

5 INSTALL PER MANUFACTURER'S INSTALLATION MANUAL.

6 STAINLESS STEEL CHAIN KITS FOR MOUNTING.

7 MOUNT HEATERS AS HIGH AS POSSIBLE WHILE MAINTAINING ALL MANUFACTURER'S CLEARANCES.

8 ALUMINIZED STEEL TUBING, GASKETED AND POWDER COATED STEEL BURNER, AND ALUMINUM REFLECTORS.

~EQUIVALENTS: SOLARONICS

GAS HEATERS

MARK	MANUFACTURER/ MODEL	LOCATION/SERVICE	INPUT AT SEA LEVEL (MBH)	OUTPUT AT ALTITUDE (MBH)	CFM	ELECTRICAL			OPERATING WEIGHT (lbs)	OVERALL DIMENSIONS	REMARKS
						HP	FLA	VOLTAGE/ PHASE			
GUH 1	REZNOR/ UBZ-060	HUNG/ EQUIPMENT ROOM	60	40	1012	1/3	7.1	115/1	100	26"Wx41"Dx17"H	1 2 3 4 5 6 7 8

1 IGNITION CONTROLLER

2 TIME DELAY RELAY

3 HIGH LIMIT SWITCH

4 PRESSURE SWITCH

5 4 POINT SUSPENSION KIT

6 24/7 PROGRAMMABLE THERMOSTAT

7 DISCONNECT SWITCH

8 SIZE AND INSTALL TAIL PIPE EXHAUST FLUE PER MANUFACTURER'S INSTALLATION INSTRUCTIONS. CONCENTRIC VENT IS ACCEPTABLE

~EQUIVALENTS: TRANE, MODINE, STERLING

3 CONSULTING ENGINEERS
1415 Park Ave. W., Denver, CO 80205
p 303.357.1998
3consultingengineers.com

COLORADO LICENSED
BRUCE PACHINGER
51373
PROFESSIONAL ENGINEER
2023-01-18

3 CONSULTING ENGINEERS

JESSE GOLDMAN, ARCHITECT
2696 S COLORADO BLVD. SUITE 525
DENVER, CO 80222
(303) 962-9164

THESE DRAWINGS AND SPECIFICATIONS, AS INSTRUMENTS OF SERVICE, ARE AND SHALL REMAIN THE PROPERTY OF CSHQA. ALL COMMON LAW, STATUTORY AND OTHER RESERVED RIGHTS, INCLUDING COPYRIGHT, IN THE PROJECT FOR WHICH THEY ARE MADE IS EXECUTED OR PUBLISHED SHALL BE RESERVED TO CSHQA. THESE DRAWINGS ARE NOT BE USED BY ANY PERSON OR ENTITY ON OTHER PROJECTS, FOR ADDITIONS TO THIS PROJECT OR FOR COMPLETION OF THIS PROJECT WHEN PHASES WITHOUT THE WRITTEN CONSENT OF CSHQA. ©2023 CSHQA, INC. AFFILIATES. Copyright © 2023

QUICK N CLEAN CAR WASH
PARKER RD. & PINE LANE AVE.
PARKER, CO 80134

2696 S COLORADO BLVD, SUITE 525
DENVER, CO 80222
(303) 962-9164
www.cshqa.com

CSHQA

PROJECT	DATE
20037	1-16-2023
DRAWN	CHECKED
JCB	JCB

REVISED

SHEET TITLE
MECHANICAL SCHEDULES

SHEET
M0.3

HYDRONIC BOILER SPECIFICATION

SNOW AND ICE MELTING

PART 1 GENERAL

1.1 SUMMARY

A. Section includes: Hydronic snow and ice melting systems, installation applications and control strategies using crosslinked polyethylene (PEX) tubing and fittings.

1.2 RELATED SECTIONS: HYDRONIC PIPING

A. Section 23 21 13 – Hydronic Piping
B. Section 23 21 13.13 – Underground Hydronic Piping

1.3 REFERENCES

A. Uponor Inc.
1. Uponor Piping Systems Installation Guide, current edition.
2. Uponor Hydronic Piping Design Assistance Manual, current edition.

B. ASTM International (ASTM):
1. ASTM E814 Standard Test Method for Fire Tests of Through-Penetration Fire Stops.
2. ASTM F876 Standard Specification for Crosslinked Polyethylene (PEX) Tubing.
3. ASTM F877 Standard Specification for Crosslinked Polyethylene (PEX) Plastic Hot- and Cold-Water Distribution Systems.
4. ASTM F1960 Standard Specification for Cold Expansion Fittings with PEX Reinforcing Rings for Use with Crosslinked Polyethylene (PEX) Tubing.
5. ASTM F2389 Standard Specification for Pressure-rated Polypropylene (PP) Piping Systems.

C. American National Standards Institute (ANSI)/National Sanitation Foundation (NSF):
1. NSF/ANSI Standard 359 Valves for Crosslinked Polyethylene (PEX) Water Distribution Tubing Systems.

D. Canadian Standards Association (CSA)
1. CAN/CSA B137.5 Crosslinked Polyethylene (PEX) Tubing Systems for Pressure Applications.

E. German Institute for Standardization (DIN)
1. DIN 4726 Warm Water Surface Heating Systems and Radiator Connecting Systems – Plastics Piping Systems and Multilayer Piping Systems.

F. International Code Council (ICC)
1. International Mechanical Code (IMC)

G. International Association of Plumbing and Mechanical Officials (IAPMO)
1. Uniform Mechanical Code (UMC)

H. International Organization for Standardization (ISO)
1. ISO 15874 Plastics Piping Systems for Hot and Cold Water Installations – Polypropylene (PP).

I. Plastics Pipe Institute (PPI)

1. PPI Technical Report TR-4.

1.4 SUBMITTALS

A. Submit under provisions of Section 01 33 00 – Administrative Requirements.

B. Product data: Submit manufacturer's product submittal data and installation instructions.

C. Shop drawings: Provide installation drawings indicating: piping layout, size dimension by installation segment, vault locations, support fixtures and schedules with all details required for installation of the system.

D. Samples: Submit selection and verification samples of piping.

E. Quality assurance/control submittals
1. Test reports: Upon request, submit test reports from recognized testing laboratories.
2. Submit the following documentation.
a. Manufacturer's certificate stating that products comply with specified requirements.
b. Manufacturer's flow schedule for the distribution system.
c. Documentation that the installer is trained to install the manufacturer's products.

F. Closeout submittals: Submit the following documents.
1. Warranty documents specified herein.
2. Operation and maintenance data.
3. Manufacturer's field reports specified herein.
4. Final as-built piping layout drawing.

1.5 QUALITY ASSURANCE

A. Installer qualifications for PEX: Installer shall have successfully completed the Uponor Piping Systems Training Course and is able to provide proof/verification of the training. Course shall be conducted by the manufacturer or a manufacturer's representative.

1. Regulatory requirements and approvals: Ensure the piping distribution system complies with all applicable codes and regulations.
2. Certifications: Provide letters of certification indicating: Installer uses skilled workers holding a trade qualification license or equivalent, or apprentices under the supervision of a licensed tradesperson.
3. Pre-installation meetings:
a. Verify project requirements, excavation conditions, system performance requirements, manufacturer's installation instructions and warranty requirements.
b. Review project construction timeline to ensure compliance or discuss modifications as required.
c. Interface with other trade representatives to verify areas of responsibility.

d. Establish the frequency and construction phase the project engineer intends for site visits and inspections by the piping manufacturer's representative.

1.6 DELIVERY, STORAGE AND HANDLING

A. General: Comply with Division 1 Product Requirement Section.
B. Comply with manufacturer's ordering instructions and lead-time requirements to avoid construction delays.
C. Delivery: Deliver materials in manufacturer's original, unopened, undamaged containers with identification labels intact.
D. Storage and protection: Store materials protected from exposure to harmful environmental conditions and at temperature and humidity conditions recommended by the manufacturer.
1. Store PEX piping in cartons or under cover to avoid dirt or foreign material from entering the piping.
2. Do not expose PEX piping to direct sunlight for more than one month.
3. Store piping on a flat surface to prevent unwanted deformation.

1.7 WARRANTY

A. Project warranty: Refer to Conditions of the Contract for project warranty provisions.
B. Manufacturer's warranty:
1. PEX-a manufacturer system warranty shall cover piping and fittings from defect for a duration of 25 years from the date of installation. Piping system warranty shall apply to systems constructed of pipe and fitting products sourced from the same manufacturer.

PART 2 PRODUCTS

2.1 MANUFACTURERS

A. Acceptable manufacturer: Uponor, located at: 5925 148th St. W.; Apple Valley, MN, 55124; toll-free: 800-321-4739; tel: 952-891-2000; email: NAspecifications@uponor.com; web: uponor-usa.com or uponor.ca.
B. Substitutions: Must be approved by Engineer.
C. Requests for substitutions will be considered in accordance with provisions of Section 01 60 00 — Product Requirements.

2.2 CROSSLINKED POLYETHYLENE PEX PIPE AND FITTINGS

A. Performance requirements:
1. PEX-a piping and fittings shall meet the following pressure and temperature ratings per ASTM F876:
a. 200 degrees F (93 degrees C) at 80 psi (551 kPa).
b. 180 degrees F (82 degrees C) at 100 psi (689 kPa).
c. 73.4 degrees F (23 degrees C) at 160 psi (1,102 kPa).
B. PEX-a (Engel-method crosslinked polyethylene) piping:
1. SDR 9, ASTM F876 and F877 (CAN/CSA-B137.5) by Uponor (Wirsbo) with an oxygen barrier meeting DIN 4726.

C. Fittings:
1. ProPEX®: Elbows, adapters, couplings, plugs, tees and multiport tees (1/2 inch through 3 inch nominal pipe size): ASTM F1960 cold-expansion fittings in brass or engineered polymer (EP) manufactured by the pipe manufacturer, utilizing cold-expansion PEX-a reinforcing rings made of same material as the pipe.
2. Fittings shall be third-party certified to NSF 14 and ASTM F1960 and shall be listed to ASTM F876 and ASTM F877.

2.3 TRANSITION FITTINGS

A. PEX-to metal transition fittings
1. Manufacturers: Provide transition fittings from the same manufacturer as the piping.
2. PEX to threaded transition: Two-piece female brass union nut ProPEX ASTM F1960 cold-expansion end, with PEX-a reinforcing cold-expansion ring.
3. PEX compression to threaded fitting: two-piece female brass union nut by compression fitting with compression ring listed to ASTM F877.

2.4 MANIFOLDS

A. Copper manifolds
Copper manifolds manufactured from Type L copper, 2 inch (51 mm) by 4 feet (1.2 m), offered by the PEX tubing manufacturer.
1. Manifold loop configurations:
a. 4 inch on center spacing
b. Balancing valve with R20 or R25 threaded connection
c. Ball Valve with R20 or R25 threaded connection
d. Balancing valve with 5/8 inch or 3/4 inch ProPEX connection
e. Ball Valve with 5/8 inch or 3/4 inch ProPEX connection
f. ProPEX connection 5/8 inch or 3/4 inch with no balancing or ball valve
2. Use manifolds with an isolation valve or a combination isolation and balancing valve on each outlet.
3. Use manifolds that support 5/8 inch (16 mm) inch or 3/4 inch (19 mm) inch PEX tubing.
4. Manifold end cap with 1/8 inch (3 mm) FNPT and 1/2 inch (25 mm) FNPT for vent and drain.
5. Install supply-and-return piping to the manifold in a reverse-return configuration to ensure self-balancing.
6. If the supply-and-return piping is in direct-return configuration, install and balance flow setters on the return leg of each manifold to the mains.

2.5 PREASSEMBLED RADIANT ROLLOUT™ MAT

A. Radiant Rollout™ Mats shall be constructed with Wirsbo hePEX™ tubing, on center spacing as designed by the manufacturer.
1. Tubing shall be 1/2 inch (13 mm) or 5/8 inch (16 mm).
2. On center spacing shall be 6 inches (152 mm) or 9 inches (229 mm).
B. The mats shall be constructed in nominal widths of 5 feet (1.5 m), with maximum lengths for 1/2 inch loops is 150 feet (46m) or 5/8 inch loops is 225 feet (69 m). The

mats shall be custom-designed based on the floor plan to ensure that mat pressure drops at the required flow rates will not exceed the scheduled maximums.
C. The mats shall be constructed with support strips at every 7 feet (2.1 m) installed perpendicular to the tubing and each loop shall be secured to the support strips.
D. Header assembly: In-slab reverse-return header assembly shall be constructed of 3/4 inch (19 mm) Wirsbo hePEX with engineered polymer (EP) ASTM F1960 cold-expansion fittings.
E. Radiant Rollout Mats shall be pressure tested prior to shipping and shall be delivered to the job site under 20 psi (138 kPa) of pressure. The mats shall be labeled according to the Radiant Rollout Mat schedule.

2.6 HYDRONIC SNOW AND ICE MELTING SYSTEM

A. Refer to Section 23 09 00 "Instrumentation and Controls for HVAC", sub-section "Sequence of Operation"

2.7 ACCESSORIES

A. Use accessories associated with the installation of the snow and ice melting system as recommended by or available from the PEX tubing manufacturer.
B. Fixing wire: 6 inches (152 mm) galvanized steel alloy wire ties shall be used to secure PEX tubing to wire mesh or reinforcing bar.
C. Plastic cable tie: Minimum 6 inches (152 mm) polyamide 6/6 nylon cable tie. Minimum 20 lb. tensile strength.
D. Staples for plastic foam insulation:
1. Black polypropylene staples shall be used to secure 3/8 inch to 5/8 inch (9.5 mm to 16 mm) tubing directly onto rigid foam insulation. Ensure that the proper size staples are used for the insulation thickness. Use 1-1/2 inch (38 mm) staples for 1 inch (25 mm) rigid foam insulation and 2-1/2 inch (63 mm) staples for 1-1/2 inch (38 mm) or thicker foam insulation.
2. Blue polypropylene staples shall be used to secure 3/8 inch to 3/4 inch (9.5 mm to 19 mm) tubing directly onto rigid foam insulation. Ensure that the proper size staples are used for the insulation thickness. Use 2 inch (51 mm) staples for 1 inch (25 mm) or thicker foam insulation.
E. Metal staples: 1-1/4 inches (32 mm) steel alloy metal staples shall be used to secure PEX tubing to wood subfloors.
F. Plastic PEX rails: 1-1/2 inches (38 mm) wide, 1 inch (25 mm) tall polyethylene plastic rails, with snap fit to hold tubing with spacing intervals. Spacing as indicated on approved shop drawings.
G. PVC bend supports: 90-degree PVC bend supports shall be used to sleeve tubing at slab penetrations. Bend supports shall be sized for appropriate tubing diameter.
H. PEX stand-up bracket: Secures to deck or concrete forms, for rough in from slab to manifold cabinet.

PART 3 EXECUTION

3.1 EXAMINATION

A. Verify that site conditions are acceptable for installation of the snow and ice melting system.

B. Do not proceed with installation of the snow and ice melting system until unacceptable conditions are corrected.

3.2 MANUFACTURER'S INSTRUCTIONS

A. Comply with manufacturer's product data, including product technical bulletins, installation instructions and design drawings.

3.3 INSTALLATION

A. Manifold supply and return piping refer to Section 23 21 13 Hydronic Piping or 23 21 13.13 Underground Hydronic Piping.

B. Install radiant system according to approved shop drawings or coordination drawings.

C. Comply with manufacturer's product data, including product technical bulletins, installation instructions and design drawings, including the following.
1. Uponor Snow and Ice Melting Design and Installation Manual, current edition
2. Uponor Hydronic Piping Design Assistance Manual (HPDAM), current edition
3. Uponor Complete Design Assistance Manual (CDAM), current edition)
4. Uponor Radiant Cooling Design Manual (RCDM), current edition
5. Uponor Radiant Floor Installation Handbook, current edition

D. PEX shall not be installed outdoors where it is exposed to direct sunlight light for more than one month.

E. Slab on-grade and paver on-grade construction with edge and under-slab insulation.
1. Provide high-density foam insulation board, and install the tubing by stapling the tubing to the insulation board with PEX foam staples.
2. Provide high-density foam insulation board with sufficient vertical compressive strength to resist compaction and cracking of sidewalk/patio. The snow and ice melting design determines the required insulation resistance value (R-value).
3. Install the vertical edge insulation along the perimeter of the slab and down to a depth equal to the bottom of the horizontal under slab insulation.
4. The submitted snow and ice melting design specifies the tubing on-center distance(s) and loop lengths. On-center distances will not exceed 12 inches.
5. Do not install tubing closer than 6 inches from the edge of the heated slab.
6. Install the tubing at a consistent depth below the surface elevation as recommended by the tubing manufacturer. Tubing installation will ensure sufficient clearance for all control joint cuts.
7. Expansion joints
a. In areas where tubing must cross metal expansion joints that occur in the concrete, the tubing shall pass below the metal expansion joints.
b. Fibrous expansion joints may be penetrated following the tubing manufacturer's and structural engineer's recommendation.
8. Metal or plastic bend supports will be used to support the tubing when departing from the slab in a 90-degree bend.

F. Slab-on-grade construction with edge insulation only

1. Fasten the tubing to flat wire mesh or reinforcing bar in accordance with the PEX tubing manufacturer's installation recommendations.
2. Install the vertical edge insulation along the perimeter of the slab and down to a minimum of 12 inches (305mm) below the slab depth.
3. Install horizontal insulation within the first 4 feet of the perimeter to provide a thermal break from the frozen ground.
4. The structural engineer determines the vertical compressive strength of the high-density foam insulation board. The snow and ice melting design determines the required insulation resistance value (R-value).
5. The submitted snow and ice melting design specifies the tubing on-center distance(s) and loop lengths. On-center distances will not exceed 12 inches (305mm).
6. Do not install tubing closer than 6 inches (152mm) from the edge of the heated slab.
7. Install the tubing at a consistent depth below the surface elevation as determined by the project engineer. Tubing installation will ensure sufficient clearance for all control joint cuts.
8. Expansion joints
a. In areas where tubing must cross metal expansion joints that occur in the concrete, the tubing shall pass below the metal expansion joints.
b. Fibrous expansion joints may be penetrated following the PEX tubing manufacturer's and structural engineer's recommendation.
9. Metal or plastic bend supports will be used to support the tubing when departing from the slab in a 90-degree bend.

G. Glycol/water solution
1. Tubing manufacturer recommends premixed or site mixed glycol/water solutions that do not exceed 50% concentration.
a. Mix the glycol/water solution to proper concentration levels to protect the system freezing during operation shutdown.
b. System circulators must operate continuously for a minimum of 30 days after the system is filled to ensure the glycol and water does not separate in a static system.
2. Refer to Division 23 Section "Hydronic Piping" for glycol requirements.

3.4 FIELD QUALITY CONTROL

A. Site tests
1. To ensure system integrity, pressure test the system before covering tubing in concrete or when other trades are working in the vicinity of the tubing.
2. Test all electrical controls in accordance with respective installation manuals.

3.5 ADJUSTING

A. Balancing across the manifold
1. Balance all loops across each manifold for equal flow resistance based on actual loop lengths and total manifold flow.

2. Balancing is unnecessary when all loop lengths across the manifold are within 3 percent of each other in length. Install the supply and return piping to the manifold in a reverse-return configuration to ensure self-balancing.
B. Balancing between manifolds is accomplished with a flow control device installed on the return piping leg from each manifold when direct return piping is used for the supply and return mains.
C. Adjust all system controls after the system has stabilized to ensure proper operation in accordance with the system design.

3.6 CLEANING

A. Remove temporary coverings and protection of adjacent work areas.
B. Repair or replace damaged installed products.
C. Clean the installed products in accordance with manufacturer's instructions prior to owner's acceptance.
D. Remove construction debris from project site and legally dispose of debris

3.7 DEMONSTRATION

A. Demonstrate operation of hydronic snow melting system to owner's personnel.
B. Advise the owner's representative about the type and concentration of glycol/water solution used in the snow and ice melting system.
1. The owner monitors the solution effectiveness through an established maintenance program as outlined by the glycol manufacturer.

3.8 PROTECTION

A. Protect installed work from damage caused from subsequent construction activity.

END OF SECTION

COLORADO LICENSED
BRUCE PACHNICKA
51373
PROFESSIONAL ENGINEER
2023-01-18

3 CONSULTING ENGINEERS

JESSE GOLDMAN, ARCHITECT
2696 S COLORADO BLVD, SUITE 525
DENVER, CO 80222
(303) 962-9164

2696 S COLORADO BLVD, SUITE 525
DENVER, CO 80222
(303) 962-9164
www.cshqa.com

CSHQA

THESE DRAWINGS AND SPECIFICATIONS AS INSTRUMENTS OF SERVICE, ARE AND SHALL REMAIN THE PROPERTY OF CSHQA. THE REPRODUCTION OF THE PROJECT FOR WHICH THEY ARE MADE IS EXECUTED IN WHOLE OR IN PART, FOR BUILDING PURPOSES ONLY, AND NOT BE USED BY ANY PERSON OR ENTITY ON OTHER PROJECTS, FOR ADDITIONS TO THIS PROJECT, OR FOR COMPLETION OF THIS PROJECT WHEN PHASES WITHOUT THE WRITTEN CONSENT OF CSHQA. © CSHQA AFFILIATES. Copyright © 2023

QUICK N CLEAN CAR WASH
PARKER RD. & PINE LANE AVE.
PARKER, CO 80134

PROJECT	DATE
20037	1-16-2023
DRAWN	CHECKED
JCB	JCB

REVISED

SHEET TITLE
MECHANICAL SNOWMELT SPECIFICATIONS

SHEET
M0.4

3 CONSULTING ENGINEERS
1415 Park Ave. W., Denver, CO 80205
p 303.357.1998
3consultingengineers.com

Triangle Tube

Engineering Submittal
Prestige Solo 250

Prestige Solo Features

- Light weight construction for wall mounting
- Approved for zero clearance to combustibles
- 3" PVC, CPVC, PP, or AL29-4C venting up to 60 equivalent feet
- 4" PVC, CPVC, PP, or AL29-4C venting up to 80 equivalent feet
- Limited 5 year warranty on parts, except igniter
- Limited 10 year warranty on heat exchanger

Approvals

- 95% AFUE Efficiency
- ENERGY STAR Qualified
- ANSI Z21.13 and CSA 4.9 Boiler Standards Compliance
- ASME Boiler Certification – ASME "H" Stamp
- Low NOx operation exceeding SCAQMD 2012 regulations

Stainless Steel Fire Tube Heat Exchanger

- 439 Stainless Steel heat exchanger construction for corrosion resistance
- Low pressure drop minimizes circulator size
- High water content provides stable temperature control
- Self cleaning flue ways reduce maintenance
- Suitable for use with propylene glycol up to 50% concentration

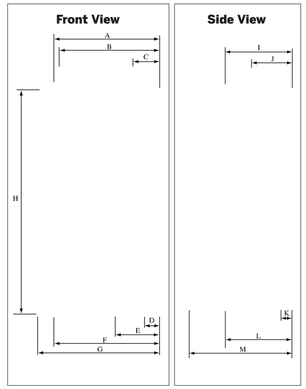
ACVMax Control System

- Graphical display with 6 navigation buttons
- EZ Setup allows quick and easy boiler settings adjustment
- Presets allow quick configuration of 4 circulator outputs
- Each circulator output is fully configurable for custom applications
- Outdoor temperature reset to maximize efficiency
- Accepts two space heating call inputs with independent outdoor reset curves
- Simultaneously heat dual temperature heating systems with built-in mixing valve control
- Domestic hot water priority with optional time-out
- Integrated cascade control for up to 6 Prestige boilers
- 0-10 VDC Modulation input
- Modbus building management system (BMS) interface, LonWorks® and BACnet® interface optional
- Adjustable warm weather shutdown
- Adjustable boiler freeze protection
- Logging function records sensor readings for system optimization and troubleshooting
- Describes lockouts in plain english and suggests solutions while storing last 8 errors

Standard Equipment

- Stainless steel premix burner
- Direct spark ignition with variable speed blower
- Full modulation with turndown ratio of 5.5:1
- Automatic air vent
- ASME 30 PSI pressure relief valve
- Integrated pressure and temperature gauge
- Outdoor temperature sensor
- Automatic low water cutoff feature with early warning
- High temperature manual reset limit safety control
- Terminal block for circulator output
- Low voltage terminal strip with removable jumpers for manual or automatic reset limits
- Swing out control for easy access and servicing
- Alarm and flame status contacts
- Polypropylene condensate pan and internal flue pipe
- Polypropylene vent/air connections with test ports

Boiler Dimensions

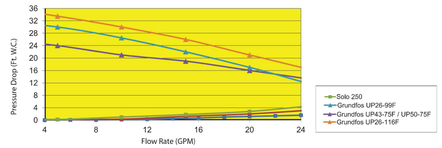


Letter	Connection	Dimension in [mm]
A	3/4" NPSC Pressure Relief Valve	17" [432]
B	3" Combustion Air Inlet	16-5/16" [415]
C	3" Vent Outlet	4-5/16 [110]
D	1-1/4" NPT Boiler Return	2-9/16" [65]
E	3/4" NPT Gas Connection	7-5/16" [186]
F	1-1/4" NPT Boiler Supply	17" [432]
G	Boiler Width	19-3/4" [502]
H	Boiler Height	36-9/16" [928]
I	3/4" NPSC Pressure Relief Valve	11-5/16" [288]
J	3" Combustion Air Inlet & 3" Vent Outlet	6-15/16" [175]
K	3/4" NPT Gas Connection	1-7/8" [48]
L	1-1/4" NPT Boiler Return & Supply	11-5/16 [288]
M	Boiler Depth	17-5/16" [440]

Boiler Specifications

Model	Fuel	Input Modulation (MBH)	AFUE	DOE Heating Capacity (MBH)	Net AHRI (MBH)	Boiler Water Volume (gal)	Power	Shipping Weight Lbs
Solo 250	Natural Propane	43.6 - 240	95%	222	193	4.5	120/1/60 FLA: 10A	140

Pressure Drop Curve vs Grundfos Circulators



1 PROVIDE NEUTRAPAL – MODEL NC–1 1.6 GALLON/HR. CONDENSATE NEUTRALIZATION KIT

2 PROVIDE AS–1, CALEFFI NA546050 (2–6") COMBINATION HYDRAULIC, AIR, DIRT, AND MAGNETIC SEPARATOR

3 PROVIDE SF–1, AXION DMF300 PRESSURE PAL DIGITAL MINI SYSTEM FEEDER WITH LOW LEVEL ALARM PANEL.

4 PROVIDE ET–1, GNLA–85 23 GALLON EXPANSION TANK

PUMPS

MARK	LOCATION/ TYPE	MANUFACTURER MODEL NO.	SIZE	GPM	TDH (FT)	RPM (MAX.)	NPSHr (FT)	MINIMUM EFFICIENCY	MCA/MOCP	VOLTS/PH/ 60 HZ	MAX. OPER. WEIGHT (lbs.)	REMARKS
P 1 / P 2 / P 3	EQUIPMENT ROOM/ BOILER PUMP	GRUNDFOS UPS 26–99 FC	–	14	6	–	–	–	197 WATTS	115/1	11	1 2
P 4	EQUIPMENT ROOM/ SYSTEM PUMP	GRUNDFOS MAGNA3 40–160 F	–	52	24	–	–	–	890 WATTS	115/1	40	1 2

1 50% PROPYLENE GLYCOL

2 3 SPEED PUMP.

~ ACCEPTED EQUIVALENT MANUFACTURERS: B&G, TACO, AND BIRAL

FLOOR HEAT CONTROLS

1. BOILER CIRCULATING PUMP IS TURNED ON BY TEKMAR CONTROLLER AT 40 DEGREES AMBIENT TEMPERATURE. THE TUBING CIRCULATION LOOP MAINTAINS A 90 DEGREE RETURN TEMPERATURE. MAINTAIN THE BOILER LOOP TEMPERATURE AT 120 DEG. F. ON THE SUPPLY LINE OF THE TANK.

3 CONSULTING ENGINEERS
1415 Park Ave. W., Denver, CO 80205
p 303.357.1998
3consultingengineers.com

COLORADO LICENSED BRUCE PACHINGER 51373 PROFESSIONAL ENGINEER
2023-01-18

3 CONSULTING ENGINEERS

JESSE GOLDMAN, ARCHITECT
2696 S COLORADO BLVD, SUITE 525
DENVER, CO 80222
(303) 962-9164

THESE DRAWINGS AND SPECIFICATIONS AS INSTRUMENTS OF SERVICE, ARE AND SHALL REMAIN THE PROPERTY OF CSHQA AND THE ARCHITECT FOR THE PROJECT FOR WHICH THEY ARE MADE IS EXECUTED. THEY ARE NOT TO BE USED IN WHOLE OR IN PART FOR ANY OTHER PROJECT AND ARE NOT TO BE LOANED, COPIED OR DISCLOSED WITHOUT COMPLETION OF THE PROJECT WHEN PHASES WITHOUT THE WRITTEN CONSENT OF CSHQA, INC. OR ITS AFFILIATES. Copyright © 2023

QUICK N CLEAN CAR WASH
PARKER RD. & PINE LANE AVE.
PARKER, CO 80134

2696 S COLORADO BLVD, SUITE 525
DENVER, CO 80222
(303) 962-9164
www.cshqa.com

CSHQA

PROJECT	DATE
20037	1-16-2023
DRAWN	CHECKED
JCB	JCB

REVISED

SHEET TITLE
MECHANICAL SNOWMELT

SHEET
M0.5

Manifold 3.A (148 °F, TruFLOW Classic, 4 Circuits)

Circuit	Areas Served	Total Length	Tube Spacing	Area Covered	Tubing	Flowrate	Head Loss[1]	Temp Drop[2]	Load[3]	Valve Setting
Circuit 1	Snowmelt Zone #3	243	9	167	hePEX 3/4"	2.45	12.0	25	27,113	4.2
Circuit 2	Snowmelt Zone #3	243	9	167	hePEX 3/4"	2.45	12.0	25	27,113	4.2
Circuit 3	Snowmelt Zone #3	243	9	167	hePEX 3/4"	2.45	12.0	25	27,113	4.2
Circuit 4	Snowmelt Zone #3	243	9	167	hePEX 3/4"	2.45	12.0	25	27,113	4.2
Total	-	972		669	-	9.80	12.0	-	108,450	

(1) Head loss for circuit tubing only. (2) Design Temp Drop (Estimated Actual Drop). (3) Required load. Includes panel back losses. Does not reflect maximum capacity of the circuit.

Manifold 3.B (148 °F, TruFLOW Classic, 4 Circuits)

Circuit	Areas Served	Total Length	Tube Spacing	Area Covered	Tubing	Flowrate	Head Loss[1]	Temp Drop[2]	Load[3]	Valve Setting
Circuit 1	Snowmelt Zone #3	243	9	167	hePEX 3/4"	2.45	12.0	25	27,113	4.2
Circuit 2	Snowmelt Zone #3	243	9	167	hePEX 3/4"	2.45	12.0	25	27,113	4.2
Circuit 3	Snowmelt Zone #3	243	9	167	hePEX 3/4"	2.45	12.0	25	27,113	4.2
Circuit 4	Snowmelt Zone #3	243	9	167	hePEX 3/4"	2.45	12.0	25	27,113	4.2
Total	-	972		669	-	9.80	12.0	-	108,450	

(1) Head loss for circuit tubing only. (2) Design Temp Drop (Estimated Actual Drop). (3) Required load. Includes panel back losses. Does not reflect maximum capacity of the circuit.

Manifold 3.C (148 °F, TruFLOW Classic, 3 Circuits)

Circuit	Areas Served	Total Length	Tube Spacing	Area Covered	Tubing	Flowrate	Head Loss[1]	Temp Drop[2]	Load[3]	Valve Setting
Circuit 1	Snowmelt Zone #3	243	9	167	hePEX 3/4"	2.45	12.0	25	27,113	4.2
Circuit 2	Snowmelt Zone #3	243	9	167	hePEX 3/4"	2.45	12.0	25	27,113	4.2
Circuit 3	Snowmelt Zone #3	243	9	167	hePEX 3/4"	2.45	12.0	25	27,113	4.2
Total	-	729		502	-	7.35	12.0	-	81,338	

(1) Head loss for circuit tubing only. (2) Design Temp Drop (Estimated Actual Drop). (3) Required load. Includes panel back losses. Does not reflect maximum capacity of the circuit.

Project Information

Project #: AM20221024-001
Name: Quick N Clean Car Wash (Parker) Snowmelt
Location: Parker, CO

Notes:

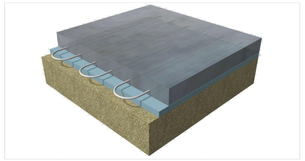
Design Conditions and Summary

Method	Uponor Load Method	Total Snow Melt Load:	574,919 Btu/hr
Climate Location	DENVER INTL,Colorado		
Design Outdoor Temp	0 °F		
Design Wind Speed	10 mph		
Fluid Type:	50% Propylene Glycol		
Total Flowrate:	51.93 USGPM		
Max. Head Loss:	20.0 ft water		
Design Temp. Drop:	25.0 °F		
Total Area:	3,547 ft²		

Radiant Panel Details

Panel Type #1 - Snow Melt - Concrete

Tubing Layer Thickness:	6.0 in
Tube Depth (Embedded Layer):	4.0 in
Tubing Layer R per Inch:	0.15 °F-ft²-hr/(Btu-in)
Insulation Rv:	10.0 hr·ft²·°F/btu
Spacing:	9 in
Fastener:	Wire Ties
Floorplans:	
Snow Melt	3,547 ft²



SNOWMELT INSTALLATION REQUIREMENTS

1. FURNISH AND INSTALL, AS SHOWN ON PLAN AND IN ACCORDANCE WITH MANUFACTURER'S RECOMMENDATIONS, A COMPLETE RADIANT FLOOR HEATING SYSTEM. EQUIPMENT SHALL BE PROVIDED BY ONE MANUFACTURER INCLUDING TUBING, MANIFOLDS, OR DISTRIBUTION STATIONS, POWERHEADS FOR ZONE CONTROL, SENSORS, CONTROL VALVES, WIRING, AND PIPE BEND SUPPORTS.
2. A 8" TALL X 16" WIDE KNOCKOUT IS NEEDED IN THE CORNER OF THE EQUIPMENT ROOM ABOUT 12" BELOW TOP OF CONCRETE.
3. ALL FORMS FOR ENTIRE HEATED SLAB MUST BE IN PLACE BEFORE FLOORHEAT IS INSTALLED.
4. 6" X 6" WIRE MESH IS REQUIRED THROUGHOUT ENTIRE HEATED SLAB BEFORE FLOORHEAT IS INSTALLED.
5. TRENCH DRAINS MUST BE INSTALLED BEFORE FLOOR HEAT IS INSTALLED.
6. THERE MUST BE A GAP AROUND EACH OF THE TRENCH DRAINS TO LAY FLOOR HEAT TUBE AROUND THE TRENCH DRAIN INSTEAD OF UNDER.
7. FLOOR HEAT TUBES MAY NOT CROSS BETWEEN TWO SEPARATE POURS.
8. ALL CONDUIT, GAS LINES, DRAINS, PLUMBING MUST BE IN PLACE BEFORE FLOOR HEAT IS INSTALLED.
9. ANY BALLARDS MUST BE LOCATED BEFORE FLOOR HEAT IS INSTALLED.
10. ALL STANDPIPES MUST BE 2" AWAY FROM SIDEWALLS.
11. USE ZIP TIES OR WIRE TIES TO HOLD DOWN TUBING TO THE MESH.
12. SEE SHEET M0.3 FOR SPECIFICATIONS
13. PROVIDE CIRCULATION LOOP SENSOR ON THE RETURN PIPING TO THE MIXING BANK.
14. THE BOILER CIRCULATION LOOP SENSOR SHALL BE LOCATED ON THE SUPPLY PIPING TO THE MIXING BANK.
15. THE AMBIENT TEMPERATURE SENSOR SHALL BE LOCATED IN AN AREA THAT DOES NOT RECEIVE DIRECT SUNLIGHT.
16. PROVIDE R-10 XBOARD OR BARRIER X5 RIGID INSULATION UNDER SLAB OF SNOWMELT ZONE.

Manifold 2.A

Circuit	Areas Served	Total Length	Tube Spacing	Area Covered	Tubing	Flowrate	Head Loss[1]	Temp Drop[2]	Load[3]	Valve Setting
Circuit 1	Snowmelt Zone #2	249	9	172	hePEX 3/4"	2.51	12.8	25	27,814	4.2
Circuit 2	Snowmelt Zone #2	249	9	172	hePEX 3/4"	2.51	12.8	25	27,814	4.2
Circuit 3	Snowmelt Zone #2	249	9	172	hePEX 3/4"	2.51	12.8	25	27,814	4.2
Circuit 4	Snowmelt Zone #2	249	9	172	hePEX 3/4"	2.51	12.8	25	27,814	4.2
Total	-	995		686	-	10.05	12.8	-	111,256	

(1) Head loss for circuit tubing only. (2) Design Temp Drop (Estimated Actual Drop). (3) Required load. Includes panel back losses. Does not reflect maximum capacity of the circuit.

Manifold 2.B

Circuit	Areas Served	Total Length	Tube Spacing	Area Covered	Tubing	Flowrate	Head Loss[1]	Temp Drop[2]	Load[3]	Valve Setting
Circuit 1	Snowmelt Zone #2	249	9	172	hePEX 3/4"	2.51	12.8	25	27,814	4.2
Total	-	249		172	-	2.51	12.8	-	27,814	

(1) Head loss for circuit tubing only. (2) Design Temp Drop (Estimated Actual Drop). (3) Required load. Includes panel back losses. Does not reflect maximum capacity of the circuit.

Manifold 3.A

Circuit	Areas Served	Total Length	Tube Spacing	Area Covered	Tubing	Flowrate	Head Loss[1]	Temp Drop[2]	Load[3]	Valve Setting
Circuit 1	Snowmelt Zone #3	243	9	167	hePEX 3/4"	2.45	12.0	25	27,113	4.2
Circuit 2	Snowmelt Zone #3	243	9	167	hePEX 3/4"	2.45	12.0	25	27,113	4.2
Circuit 3	Snowmelt Zone #3	243	9	167	hePEX 3/4"	2.45	12.0	25	27,113	4.2
Circuit 4	Snowmelt Zone #3	243	9	167	hePEX 3/4"	2.45	12.0	25	27,113	4.2
Total	-	972		669	-	9.80	12.0	-	108,450	

(1) Head loss for circuit tubing only. (2) Design Temp Drop (Estimated Actual Drop). (3) Required load. Includes panel back losses. Does not reflect maximum capacity of the circuit.

Manifold 3.B

Circuit	Areas Served	Total Length	Tube Spacing	Area Covered	Tubing	Flowrate	Head Loss[1]	Temp Drop[2]	Load[3]	Valve Setting
Circuit 1	Snowmelt Zone #3	243	9	167	hePEX 3/4"	2.45	12.0	25	27,113	4.2
Circuit 2	Snowmelt Zone #3	243	9	167	hePEX 3/4"	2.45	12.0	25	27,113	4.2
Circuit 3	Snowmelt Zone #3	243	9	167	hePEX 3/4"	2.45	12.0	25	27,113	4.2
Circuit 4	Snowmelt Zone #3	243	9	167	hePEX 3/4"	2.45	12.0	25	27,113	4.2
Total	-	972		669	-	9.80	12.0	-	108,450	

(1) Head loss for circuit tubing only. (2) Design Temp Drop (Estimated Actual Drop). (3) Required load. Includes panel back losses. Does not reflect maximum capacity of the circuit.

Manifold 3.C

Circuit	Areas Served	Total Length	Tube Spacing	Area Covered	Tubing	Flowrate	Head Loss[1]	Temp Drop[2]	Load[3]	Valve Setting
Circuit 1	Snowmelt Zone #3	243	9	167	hePEX 3/4"	2.45	12.0	25	27,113	4.2
Circuit 2	Snowmelt Zone #3	243	9	167	hePEX 3/4"	2.45	12.0	25	27,113	4.2
Circuit 3	Snowmelt Zone #3	243	9	167	hePEX 3/4"	2.45	12.0	25	27,113	4.2
Total	-	729		502	-	7.35	12.0	-	81,338	

(1) Head loss for circuit tubing only. (2) Design Temp Drop (Estimated Actual Drop). (3) Required load. Includes panel back losses. Does not reflect maximum capacity of the circuit.

Disclaimers

Project Information

Project #: AM20221024-001
Name: Quick N Clean Car Wash (Parker) Snowmelt
Location: Parker, CO

Notes:

Supply Summary

Name	Temp	Total Fluid Vol	Total Flow	Head Loss[1]	Load[2]	# Circuits
Water Temp 1	148	94.59	51.93	20.0	574,919	21

(1) Head loss includes manifolds, circuits, and supply/return piping if specified, may also contain control valve losses. (2) Load includes all panel back losses.

Manifold Summary

Manifold Name	Circuits	Flowrate	Required Temp.	Supplied Temp.	Manifold Type	S/R Length[1]	S/R Pipe	Manifold Head Loss	Circuit Head Loss	S/R Head Loss	Total Head Loss[2]
Manifold 1.A	4	9.94	148	148	TruFLOW Classic	-	-	7.1	12.4	0.0	19.5
Manifold 1.B	1	2.49	148	148	TruFLOW Classic	-	-	4.1	12.4	0.0	16.6
Manifold 2.A	4	10.05	148	148	TruFLOW Classic	-	-	7.2	12.8	0.0	20.0
Manifold 2.B	1	2.51	148	148	TruFLOW Classic	-	-	4.2	12.8	0.0	17.0
Manifold 3.A	4	9.80	148	148	TruFLOW Classic	-	-	6.9	12.0	0.0	18.9
Manifold 3.B	4	9.80	148	148	TruFLOW Classic	-	-	6.9	12.0	0.0	18.9
Manifold 3.C	3	7.35	148	148	TruFLOW Classic	-	-	5.9	12.0	0.0	17.9
Total	21	51.93	-	-	-	-	-	7.2	12.8	0.0	20.0

(1) S/R Length = one way, (2) Total Head loss includes manifold, circuits and supply/return piping if specified.

Water Temp 1 (148 °F)

Manifold 1.A (148 °F, TruFLOW Classic, 4 Circuits)

Circuit	Areas Served	Total Length	Tube Spacing	Area Covered	Tubing	Flowrate	Head Loss[1]	Temp Drop[2]	Load[3]	Valve Setting
Circuit 1	Snowmelt Zone #1	246	9	170	hePEX 3/4"	2.49	12.4	25	27,522	4.2
Circuit 2	Snowmelt Zone #1	246	9	170	hePEX 3/4"	2.49	12.4	25	27,522	4.2
Circuit 3	Snowmelt Zone #1	246	9	170	hePEX 3/4"	2.49	12.4	25	27,522	4.2
Circuit 4	Snowmelt Zone #1	246	9	170	hePEX 3/4"	2.49	12.4	25	27,522	4.2
Total	-	986		679	-	9.94	12.4	-	110,089	

(1) Head loss for circuit tubing only. (2) Design Temp Drop (Estimated Actual Drop). (3) Required load. Includes panel back losses. Does not reflect maximum capacity of the circuit.

Manifold 1.B (148 °F, TruFLOW Classic, 1 Circuits)

Circuit	Areas Served	Total Length	Tube Spacing	Area Covered	Tubing	Flowrate	Head Loss[1]	Temp Drop[2]	Load[3]	Valve Setting
Circuit 1	Snowmelt Zone #1	246	9	170	hePEX 3/4"	2.49	12.4	25	27,522	4.2
Total	-	246		170	-	2.49	12.4	-	27,522	

(1) Head loss for circuit tubing only. (2) Design Temp Drop (Estimated Actual Drop). (3) Required load. Includes panel back losses. Does not reflect maximum capacity of the circuit.

Manifold 2.A (148 °F, TruFLOW Classic, 4 Circuits)

Circuit	Areas Served	Total Length	Tube Spacing	Area Covered	Tubing	Flowrate	Head Loss[1]	Temp Drop[2]	Load[3]	Valve Setting
Circuit 1	Snowmelt Zone #2	249	9	172	hePEX 3/4"	2.51	12.8	25	27,814	4.2
Circuit 2	Snowmelt Zone #2	249	9	172	hePEX 3/4"	2.51	12.8	25	27,814	4.2
Circuit 3	Snowmelt Zone #2	249	9	172	hePEX 3/4"	2.51	12.8	25	27,814	4.2
Circuit 4	Snowmelt Zone #2	249	9	172	hePEX 3/4"	2.51	12.8	25	27,814	4.2
Total	-	995		686	-	10.05	12.8	-	111,256	

(1) Head loss for circuit tubing only. (2) Design Temp Drop (Estimated Actual Drop). (3) Required load. Includes panel back losses. Does not reflect maximum capacity of the circuit.

Manifold 2.B (148 °F, TruFLOW Classic, 1 Circuits)

Circuit	Areas Served	Total Length	Tube Spacing	Area Covered	Tubing	Flowrate	Head Loss[1]	Temp Drop[2]	Load[3]	Valve Setting
Circuit 1	Snowmelt Zone #2	249	9	172	hePEX 3/4"	2.51	12.8	25	27,814	4.2
Total	-	249		172	-	2.51	12.8	-	27,814	

(1) Head loss for circuit tubing only. (2) Design Temp Drop (Estimated Actual Drop). (3) Required load. Includes panel back losses. Does not reflect maximum capacity of the circuit.

uponor

Snow Melt System Design Report

Project #:AM20221024-001
October 24, 2022

Project Information

Project #: AM20221024-001
Name: Quick N Clean Car Wash (Parker) Snowmelt
Location: Parker, CO

Notes:

Design Conditions and Summary

Method	Uponor Load Method	Total Circuit Lengths:	Total Snow Melt Load: 574,919 Btu/hr
Climate Location	DENVER INTL,Colorado	hePEX 3/4" 5,149 ft	
Design Outdoor Temp	0 °F		
Design Wind Speed	10 mph	Total Circuits: 21	
		Total Manifolds: 7	
Fluid Type:	50% Propylene Glycol		
Total Flowrate:	51.93 USGPM	Total Tubing Volume: 94.59 USG	
Max. Head Loss:	20.0 ft water	Glycol Volume: 47.30 USG	
Design Temp. Drop:	25.0 °F		
Total Area:	3,547 ft²		

Snow Melt System Design

Snowmelt Zone #1

Total Area:	849 ft²	Tubing:	hePEX 3/4"	Design Load:	126,501 Btu/hr
Heated Area:	849 ft²	Total Circuits:	5	Downward Loss:	11,110 Btu/hr
Construction:	Snow Melt - Concrete	Avg. Circuit Length:	246 ft	Total Heat Load:	137,611 Btu/hr
Slab Depth:	6.0 in	Total Length in panel:	1,132 ft		
Insulation Rv:	10.0 hr·ft²·°F/btu	Avg. Tube Spacing:	9 in		
		Min Supply Temp:	148 °F		
Design Surface Temp:	39 °F				

Snowmelt Zone #2

Total Area:	858 ft²	Tubing:	hePEX 3/4"	Design Load:	127,842 Btu/hr
Heated Area:	858 ft²	Total Circuits:	5	Downward Loss:	11,228 Btu/hr
Construction:	Snow Melt - Concrete	Avg. Circuit Length:	249 ft	Total Heat Load:	139,070 Btu/hr
Slab Depth:	6.0 in	Total Length in panel:	1,144 ft		
Insulation Rv:	10.0 hr·ft²·°F/btu	Avg. Tube Spacing:	9 in		
		Min Supply Temp:	148 °F		
Design Surface Temp:	39 °F				

Snowmelt Zone #3

Total Area:	1,840 ft²	Tubing:	hePEX 3/4"	Design Load:	274,160 Btu/hr
Heated Area:	1,840 ft²	Total Circuits:	11	Downward Loss:	24,078 Btu/hr
Construction:	Snow Melt - Concrete	Avg. Circuit Length:	243 ft	Total Heat Load:	298,238 Btu/hr
Slab Depth:	6.0 in	Total Length in panel:	2,453 ft		
Insulation Rv:	10.0 hr·ft²·°F/btu	Avg. Tube Spacing:	9 in		
		Min Supply Temp:	148 °F		
Design Surface Temp:	39 °F				

Manifold Summary

Manifold Name	Circuits	Flowrate	Supplied Temp.	Max Temp. Drop	Manifold Type	S/R Length[1]	S/R Pipe	Manifold Head Loss	Circuit Head Loss	S/R Head Loss	Total Head Loss[2]
Manifold 1.A	4	9.94	148	25	TruFLOW Classic	-	-	7.1	12.4	0.0	19.5
Manifold 1.B	1	2.49	148	25	TruFLOW Classic	-	-	4.1	12.4	0.0	16.6
Manifold 2.A	4	10.05	148	25	TruFLOW Classic	-	-	7.2	12.8	0.0	20.0
Manifold 2.B	1	2.51	148	25	TruFLOW Classic	-	-	4.2	12.8	0.0	17.0
Manifold 3.A	4	9.80	148	25	TruFLOW Classic	-	-	6.9	12.0	0.0	18.9
Manifold 3.B	4	9.80	148	25	TruFLOW Classic	-	-	6.9	12.0	0.0	18.9
Manifold 3.C	3	7.35	148	25	TruFLOW Classic	-	-	5.9	12.0	0.0	17.9
Total	21	51.93	-	-	-	-	-	7.2	12.8	0.0	20.0

(1) S/R Length = one way, (2) Total Head loss includes manifold, circuits and supply/return piping if specified.

Manifold 1.A

Circuit	Areas Served	Total Length	Tube Spacing	Area Covered	Tubing	Flowrate	Head Loss[1]	Temp Drop[2]	Load[3]	Valve Setting
Circuit 1	Snowmelt Zone #1	246	9	170	hePEX 3/4"	2.49	12.4	25	27,522	4.2
Circuit 2	Snowmelt Zone #1	246	9	170	hePEX 3/4"	2.49	12.4	25	27,522	4.2
Circuit 3	Snowmelt Zone #1	246	9	170	hePEX 3/4"	2.49	12.4	25	27,522	4.2
Circuit 4	Snowmelt Zone #1	246	9	170	hePEX 3/4"	2.49	12.4	25	27,522	4.2
Total	-	986		679	-	9.94	12.4	-	110,089	

(1) Head loss for circuit tubing only. (2) Design Temp Drop (Estimated Actual Drop). (3) Required load. Includes panel back losses. Does not reflect maximum capacity of the circuit.

Manifold 1.B

Circuit	Areas Served	Total Length	Tube Spacing	Area Covered	Tubing	Flowrate	Head Loss[1]	Temp Drop[2]	Load[3]	Valve Setting
Circuit 1	Snowmelt Zone #1	246	9	170	hePEX 3/4"	2.49	12.4	25	27,522	4.2
Total	-	246		170	-	2.49	12.4	-	27,522	

(1) Head loss for circuit tubing only. (2) Design Temp Drop (Estimated Actual Drop). (3) Required load. Includes panel back losses. Does not reflect maximum capacity of the circuit.

3 CONSULTING ENGINEERS
1415 Park Ave. W., Denver, CO 80205
p 303.357.1998
3consultingengineers.com

COLORADO LICENSED
BRUCE PACHNICKA
51373
PROFESSIONAL ENGINEER
2023-01-18

3 CONSULTING ENGINEERS

JESSE GOLDMAN, ARCHITECT
2696 S COLORADO BLVD, SUITE 525
DENVER, CO 80222
(303) 962-9164

THESE DRAWINGS AND SPECIFICATIONS, AS INSTRUMENTS OF SERVICE, ARE AND SHALL REMAIN THE PROPERTY OF CSHQA. THESE DRAWINGS AND SPECIFICATIONS ARE THE PROJECT FOR WHICH THEY ARE MADE IS EXECUTED. THEY ARE NOT TO BE USED IN WHOLE OR IN PART, FOR ANY OTHER PROJECT. THEY ARE NOT TO BE USED BY ANY PERSON OR ENTITY ON OTHER PROJECTS, FOR ADDITIONS TO THIS PROJECT, OR FOR COMPLETION OF THIS PROJECT WHEN PHASES WITHOUT THE WRITTEN CONSENT OF CSHQA. © 2023 CSHQA, INC. ALL RIGHTS RESERVED.

QUICK N CLEAN CAR WASH
PARKER RD. & PINE LANE AVE.
PARKER, CO 80134

2696 S COLORADO BLVD, SUITE 525
DENVER, CO 80222
(303) 962-9164
www.cshqa.com

CSHQA

PROJECT	DATE
20037	1-16-2023
DRAWN	CHECKED
JCB	JCB

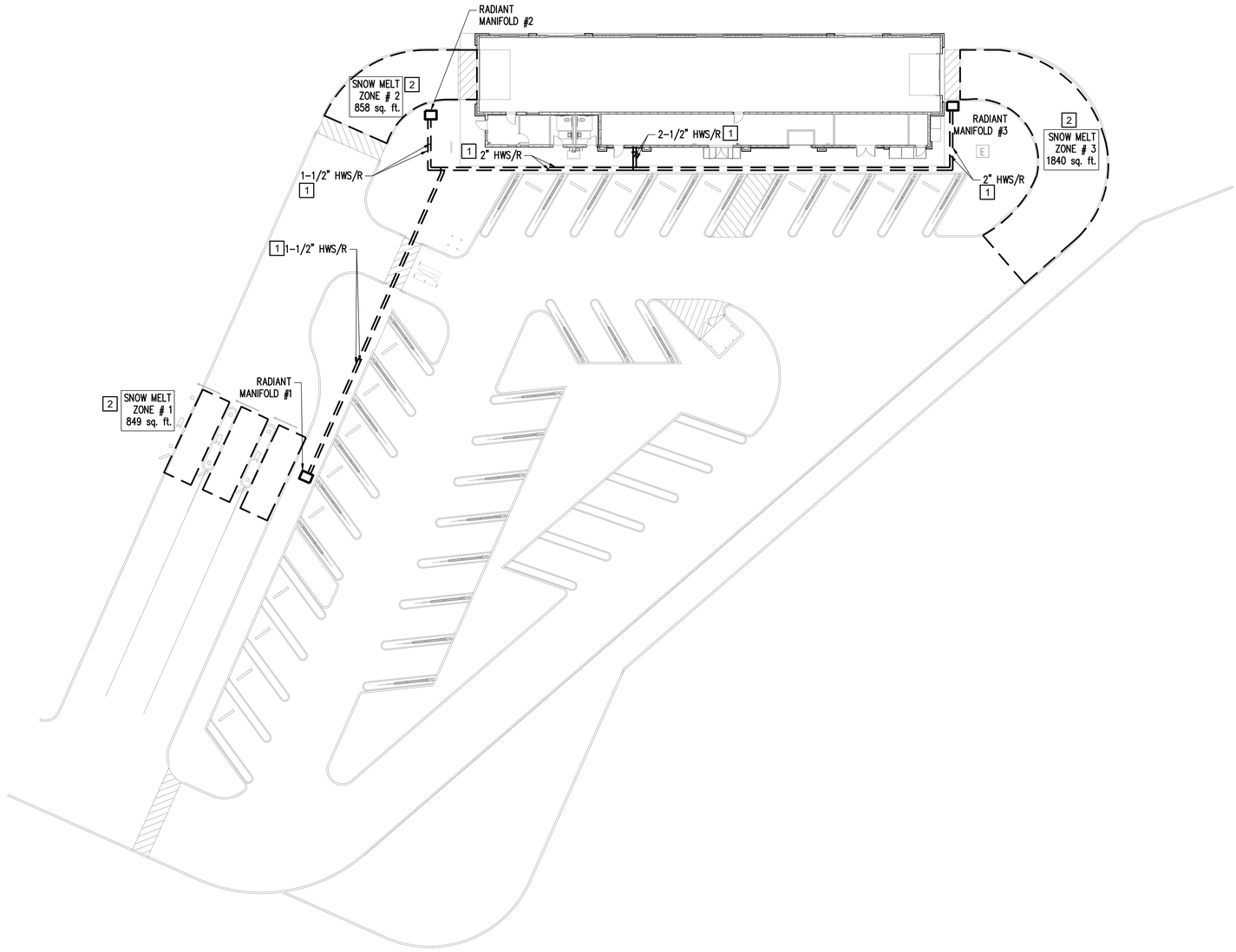
REVISED

SHEET TITLE
MECHANICAL SNOWMELT

SHEET
M0.6

HVAC NOTES

1. DETERMINE BEST ROUTING OF SNOWMELT MAINS BASED ON FIELD CONDITIONS.
2. FOLLOW ALL SPECIFICATIONS AND SNOWMELT DESIGN CONDITIONS/CALCULATIONS ON SHEETS M0.3 AND M0.5 FOR # OF LOOPS, LOOP SPACING, AND LOOP PIPE SIZING AS WELL AS MATERIALS AND INSTALLATIONS.



1 MECHANICAL SNOWMELT ZONE MAP
1" = 20'-0"

3 CONSULTING ENGINEERS
1415 Park Ave. W., Denver, CO 80205
p 303.357.1998
3consultingengineers.com

COLORADO LICENSED
BRUCE PACHINGER
51373
PROFESSIONAL ENGINEER
2023-01-18

3 CONSULTING ENGINEERS

JESSE GOLDMAN, ARCHITECT
2696 S COLORADO BLVD, SUITE 525
DENVER, CO 80222
(303) 962-9164

THESE DRAWINGS AND SPECIFICATIONS, AS INSTRUMENTS OF SERVICE, ARE AND SHALL REMAIN THE PROPERTY OF ARCHITECT AND/OR ENGINEER. THE PROJECT FOR WHICH THEY ARE MADE IS EXECUTED AND/OR CONSTRUCTED IN RELIANCE UPON THEM. THEY SHALL NOT BE USED BY ANY PERSON OR ENTITY ON OTHER PROJECTS, EXTENSIONS OF THIS PROJECT OR ADDITIONS TO THIS PROJECT WHEN PHASED WITHOUT THE WRITTEN CONSENT OF CSHQA. ©2021-2023 CSHQA, INC. AND AFFILIATES. Copyright © 2023

QUICK N CLEAN CAR WASH

PARKER RD. & PINE LANE AVE.

PARKER, CO 80134

2696 S COLORADO BLVD, SUITE 525
DENVER, CO 80222
(303) 962-9164
www.cshqa.com

CSHQA

PROJECT	DATE
20037	1-16-2023
DRAWN	CHECKED
JCB	JCB

REVISED

SHEET TITLE
MECHANICAL SNOWMELT PLAN

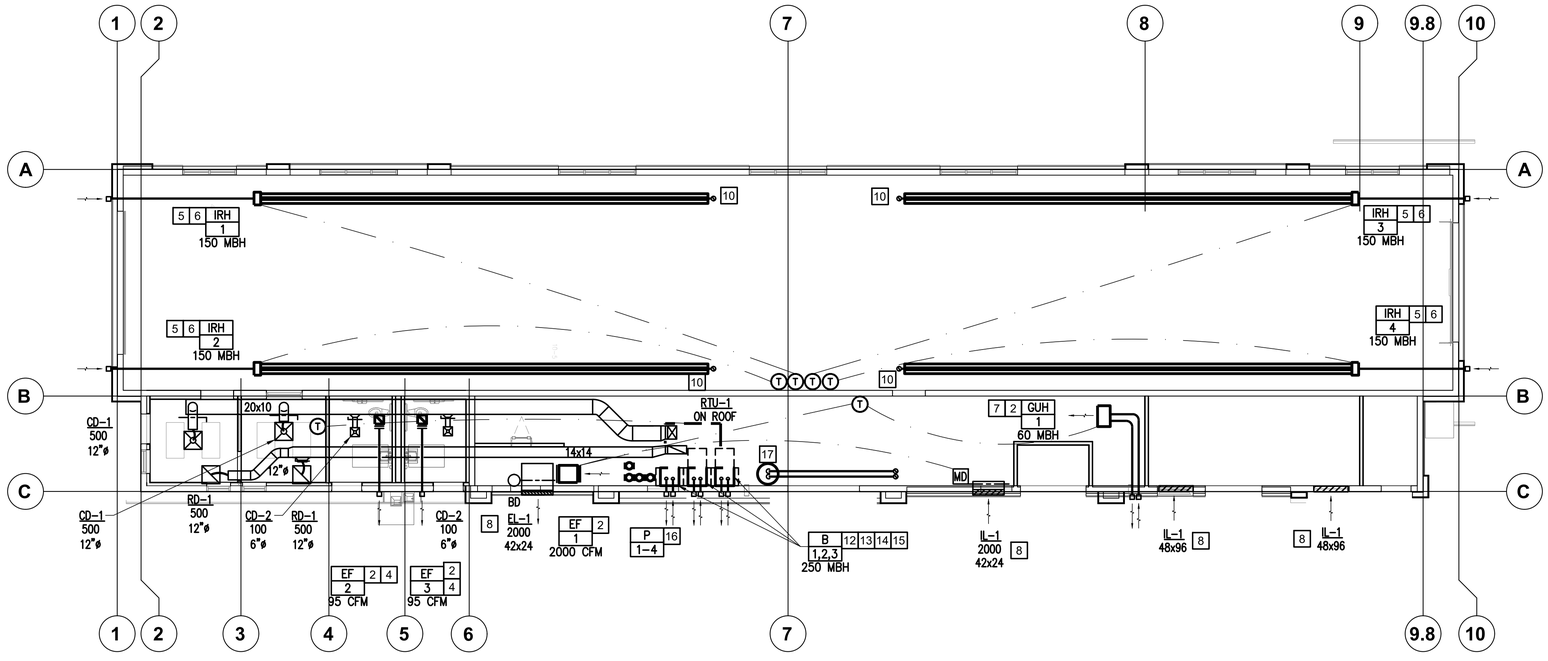
SHEET
M1.0

SHEET NOTES

1. GC TO PROVIDE 1" DOOR UNDERCUT ON ALL BATHROOM DOORS WHERE TRANSFER DUCTS ARE NOT INCLUDED.
2. VERIFY ALL T-STAT LOCATIONS WITH OWNER PRIOR TO INSTALLATION. TYPICAL.
3. READ AND FOLLOW ALL NOTES AND SPECIFICATIONS ON SHEETS M0-1 AND M0-2.
4. ALL DUCTWORK SHALL BE INSTALLED AND INSULATED PER SPECIFICATIONS AND DETAILS.
5. ALL EXPOSED DUCTWORK SHALL BE GALVANIZED SPIRAL DUCT. REFER TO ARCHITECTURAL DRAWINGS FOR PAINTING REQUIREMENTS.
6. PAINT INSIDE OF ALL GRD'S WHERE INSIDE IS VISIBLE FLAT BLACK.
7. PROVIDE A MAXIMUM OF 5' OF FLEX DUCT WHEN CONNECTING TO GRD'S (EXCEPT FOR TRANSFERS) PER SPECIFICATIONS. SEE DETAILS.
8. PROVIDE DUCT FITTINGS PER SMACNA STANDARDS FOR ALL DUCT FITTINGS. TYPICAL-ALL..
9. ALL EXPOSED DIFFUSERS (NOT IN CEILING) SHALL BE HUNG AT SAME HEIGHT AS THE LIGHTS FIXTURES UNLESS NOTED OTHERWISE.
10. ALL DUCTWORK SHALL BE INSTALLED AND INSULATED PER SPECIFICATIONS. INSTALL 1-1/2" ACOUSTICALLY LINER IN ALL EXPOSED DUCTWORK.
11. ALL VOLUME DAMPERS SHALL BE INSTALLED IN LOCATIONS THAT DO NOT REQUIRE ACCESS PANELS AND ARE ACCESSIBLE.
12. HANG ALL DUCTWORK TIGHT TO STRUCTURE.
13. COORDINATE ALL DUCTS WITH STRUCTURE AND CEILINGS BELOW PRIOR TO PURCHASING. CONTACT ARCHITECT/DESIGN TEAM FOR ANY CONFLICTS.
14. CONTRACTOR SHALL FOLLOW ALL DETAILS AS APPLICABLE TO APPLICATION UNLESS NOTED OTHERWISE.

HVAC NOTES

1. SEE DETAILS ON SHEET M2.2 FOR AIR BRANCHES AND DIFFUSER INSTALLATION DETAIL. TYPICAL.
2. HANG VIA VIBRATION ISOLATORS.
3. EXHAUST FLUE MUST BE INSTALLED ABOVE WINDOWS AND MEET ALL CLEARANCES REQUIRED FOR COMBUSTIBLES PER MANUFACTURER'S INSTALLATION INSTRUCTIONS. DO NOT INSTALL DIRECTLY OVER ANY ELECTRICAL GEAR. EXHAUST SHALL BE A MINIMUM OF 4'-0" FROM OPERABLE OPENINGS.
4. CONNECT EXHAUST ROUND DUCT TO FAN AND TERMINATE THROUGH WALL WITH GREENHECK MODEL EXHAUST WALL CAP WC (PAINTABLE) AS HIGH AS POSSIBLE. ALL ENVIRONMENTAL EXHAUST SHALL BE A MINIMUM OF 3'-0" FROM OPERABLE OPENINGS AND 10'-0" FROM ALL OUTSIDE AIR INTAKES.
5. SIZE AND INSTALL INTAKE AND EXHAUST FLUES FOR INFRARED HEATERS PER MANUFACTURER'S INSTALLATION INSTRUCTIONS AND PER IFGC 503.8.
6. HANG AND INSTALL INFRARED HEATERS PER THE MANUFACTURER'S INSTALLATION INSTRUCTIONS. INSTALL IN LOCATION WHERE INFRARED HEATERS MEET ALL MANUFACTURER'S CLEARANCES TO COMBUSTIBLES.
7. SIZE AND INSTALL DIRECT VENT COMBUSTION AIR AND FLUE THROUGH WALL PER MANUFACTURER'S INSTALLATION INSTRUCTIONS FOR GAS UNIT HEATER.
8. HANG EXHAUST FAN AND LOUVER AS HIGH AS POSSIBLE. INTAKE AND EXHAUST LOUVER SHALL BE INSTALLED AT SAME HEIGHT.
9. SIZE AND INSTALL INTAKE AND EXHAUST FLUES FOR INFRARED HEATERS PER MANUFACTURER'S INSTALLATION INSTRUCTIONS. INSTALL ALL VENTS ABOVE WINDOWS AND OTHER OBSTRUCTIONS.
10. PROVIDE EXHAUST FLUE UP THROUGH ROOF WITH VENT CAP. INSTALL AND SIZE PER MANUFACTURER'S INSTALLATION INSTRUCTIONS.
11. SIZE AND INSTALL DIRECT VENT COMBUSTION AIR AND FLUE THROUGH WALL PER MANUFACTURER'S INSTALLATION INSTRUCTIONS FOR SNOWMELT BOILER (BY OTHERS). COORDINATE FINAL LOCATION OF SNOWMELT BOILER IN FIELD.
12. PROVIDE 3" POLYPROPYLENE VENT FOR BOTH THE COMBUSTION AIR VENT AND THE GAS VENT FOR HYDRONIC BOILER. COMBUSTION AIR INTAKE SHALL BE SIDEWALL AND GAS VENT SHALL BE THROUGH THE ROOF. INSTALL AND SIZE PER MANUFACTURER'S INSTALLATION INSTRUCTIONS.
13. SEE PIPING DIAGRAM FOR BOILER, PUMP, PIPE SIZES, VALVING, CONDENSATE NEUTRALIZATION KIT, EXPANSION TANK, AND SYSTEM FEEDER.
14. PROVIDE COMPLETE RADIANT FLOOR HEATING SYSTEM PER SPECIFICATIONS AND SCHEDULES AND SYSTEM DESIGN.
15. PIPE BOILERS PER PIPING DIAGRAM, DETAIL A, ON SHEET M2.1 AND FOLLOW INSTALLATION INSTRUCTIONS BY MANUFACTURER.
16. SEE DETAILS FOR PUMP PIPING DIAGRAM ON SHEET M2.1.
17. PROVIDE 6" SINGLE OPENING OUTSIDE AIR DUCT AND TERMINATE 6" BELOW CEILING AND ABOVE ROOF WITH GOOSENECK OR INTAKE VENT FOR WATER HEATER. SIZE AND INSTALL EXHAUST VENT FOR WATER HEATER THROUGH ROOF PER MANUFACTURER'S INSTALLATION INSTRUCTIONS.



1 MECHANICAL FLOOR PLAN
1/8" = 1'-0"

COLORADO LICENSED
BRUCE PACHINGER
51373
PROFESSIONAL ENGINEER
2023-01-18

3 CONSULTING ENGINEERS

JESSE GOLDMAN, ARCHITECT
2696 S COLORADO BLVD, SUITE 525
DENVER, CO 80222
(303) 962-9164

THESE DRAWINGS AND SPECIFICATIONS, AS INSTRUMENTS OF SERVICE, ARE AND SHALL REMAIN THE PROPERTY OF CSHQA. THEY ARE NOT TO BE USED ON THE PROJECT FOR WHICH THEY ARE MADE IS EXECUTED OR THE RIGHTS RESERVED HEREIN ARE RELEASED. THEY SHALL NOT BE USED BY ANY PERSON OR ENTITY ON OTHER PROJECTS, FOR ADDITIONS TO THIS PROJECT, OR FOR COMPLETION OF THIS PROJECT WHEN PHASES WITHOUT THE WRITTEN CONSENT OF CSHQA. CSHQA, INC. OR ITS AFFILIATES. Copyright © 2023

2696 S COLORADO BLVD, SUITE 525
DENVER, CO 80222
(303) 962-9164
www.cshqa.com

QUICK N CLEAN CAR WASH

PARKER, CO 80134

PARKER RD. & PINE LANE AVE.

CSHQA

PROJECT	DATE
20037	1-16-2023
DRAWN	CHECKED
JCB	JCB

REVISED

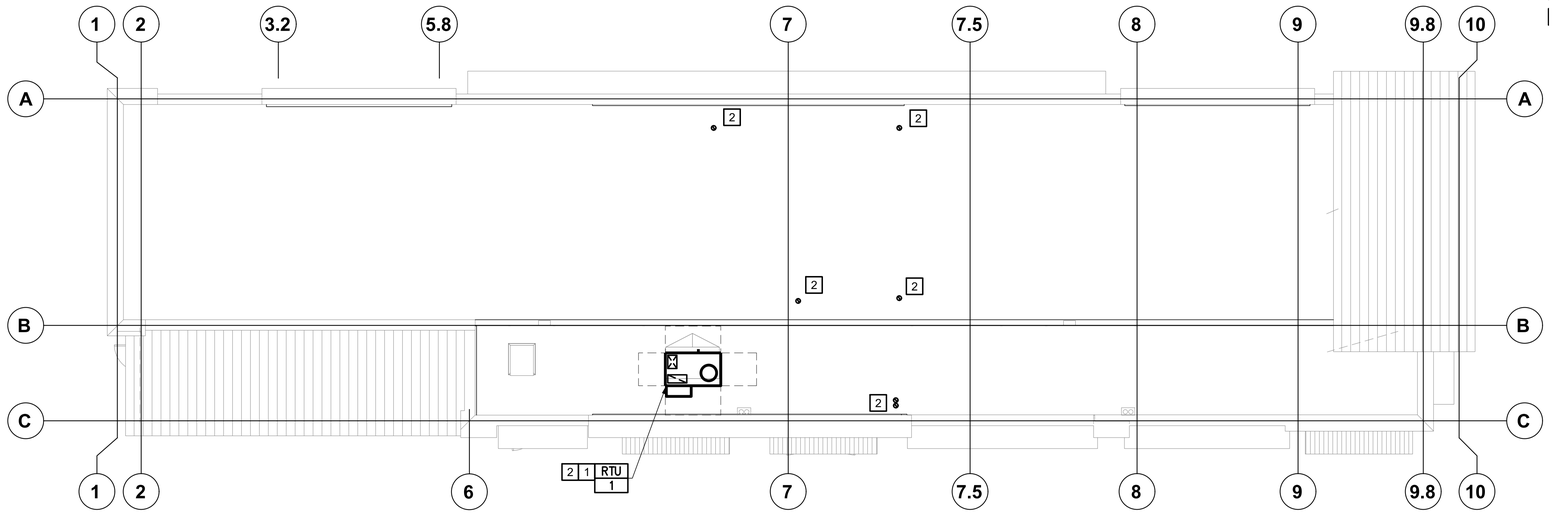
SHEET TITLE
MECHANICAL FLOOR PLAN

SHEET
M1.1

3 CONSULTING ENGINEERS
1415 Park Ave. W., Denver, CO 80205
p 303.357.1998
3consultingengineers.com

HVAC NOTES

1. CONFIRM LOCATION OF EQUIPMENT WITH STRUCTURAL PRIOR TO INSTALLATION.
2. KEEP ALL FLUES, EXHAUST AIR, AND PLUMBING VENTS A MINIMUM OF 10'-0" FROM ALL OUTSIDE AIR INTAKES.



1 MECHANICAL ROOF PLAN
1/8" = 1'-0"

COLORADO LICENSED
BRUCE PACHINGAT
51373
PROFESSIONAL ENGINEER
2023-01-18

3 CONSULTING ENGINEERS

JESSE GOLDMAN, ARCHITECT
2696 S COLORADO BLVD, SUITE 525
DENVER, CO 80222
(303) 962-9164

THESE DRAWINGS AND SPECIFICATIONS, AS INSTRUMENTS OF SERVICE, ARE AND SHALL REMAIN THE PROPERTY OF ARCHITECT WHETHER THE PROJECT FOR WHICH THEY ARE MADE IS EXECUTED OR NOT. THE DRAWINGS AND SPECIFICATIONS ARE NOT TO BE USED BY ANY PERSON OR ENTITY ON OTHER PROJECTS, FOR ADDITIONS TO THIS PROJECT OR FOR COMPLETION OF THIS PROJECT WHEN PHASES WITHOUT THE WRITTEN PERMISSION OF CSHQA. INC OR ITS AFFILIATES. Copyright © 2023

QUICK N CLEAN CAR WASH

PARKER, CO 80134

PARKER RD. & PINE LANE AVE.

2696 S COLORADO BLVD, SUITE 525
DENVER, CO 80222
(303) 962-9164
www.cshqa.com

CSHQA

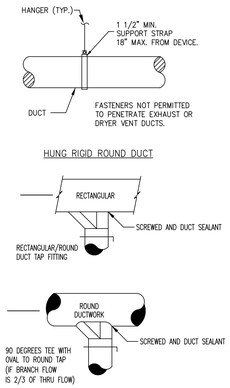
PROJECT	DATE
20037	1-16-2023
DRAWN	CHECKED
JCB	JCB

REVISED

SHEET TITLE
MECHANICAL ROOF PLAN

SHEET
M1.2

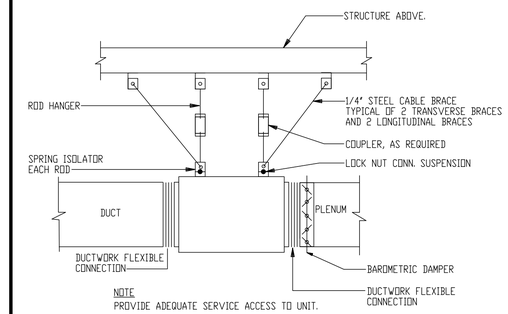
3 CONSULTING ENGINEERS
1415 Park Ave. W., Denver, CO 80205
p 303.357.1998
3consultingengineers.com



ROUND DUCT BRANCHES

NO SCALE

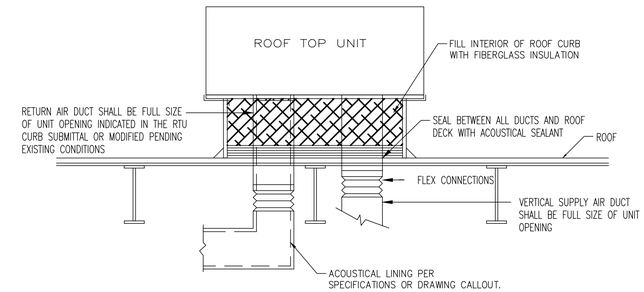
E



INLINE FAN

NO SCALE

D



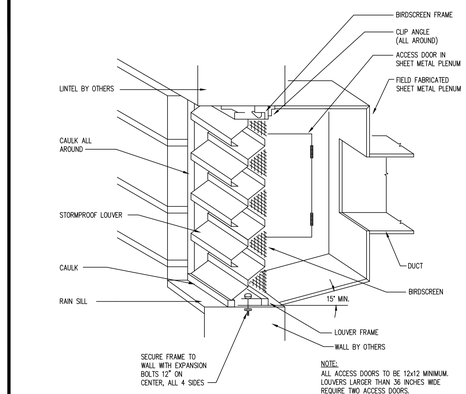
ROOFTOP UNIT

NO SCALE

A

GENERAL NOTES

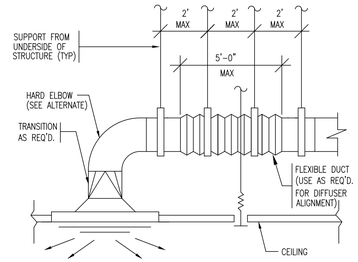
1. REFER TO FLOOR PLAN FOR SUPPLY AIR DUCT ROUTING AND SIZING.



LOUVER

NO SCALE

F



NOTES:

① MAXIMUM SAG 1/2" PER FOOT.

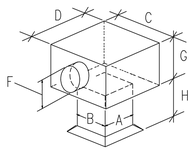
CEILING DIFFUSER BRANCH DUCTS W/FLEX CONNECTION

DIFFUSER BRANCH DUCTS W/FLEX CONNECTION

NO SCALE

C

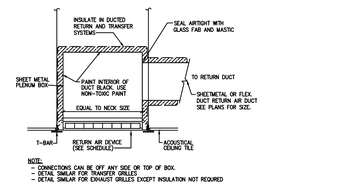
90° TURN DOWN OF FLEX DUCT TO DIFFUSER THROAT IS NOT ACCEPTABLE.



NECK = A X B OR ROUND DIAMETER
C = B + 2"(MIN.)
D = A + 2"(MIN.)
G = F + 2"(MIN.)
H = 6"(MIN.)

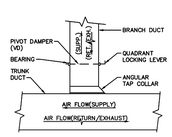
F = ROUND CONNECT SIZE OR DEPTH OF AN EQUIVALENT OVAL HAVING THE SAME CIRCUMFERENCE AS THE ROUND.

ALTERNATE



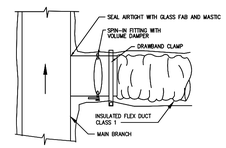
RETURN AIR GRILLE DETAIL

NOT TO SCALE



SUPPLY/RETURN AND EXHAUST BRANCH DUCTWORK DETAIL

SCALE : NOT TO SCALE



SPIN-IN COLLAR FITTING DETAIL

AIR BRANCHES & DIFFUSERS

NO SCALE

B

VENTILATION REQUIREMENTS

RTU-1: OUTDOOR AIR VENTILATION CALCULATION CONSTANT VOLUME SYSTEM

ROOM NAME	OCCUPANCY CLASSIFICATION	A_z FT^2	R_a CFM/ FT^2	OCCUPANT DENSITY (#/1000 FT^2)	P_z # People	R_p CFM/ PERSON	E_z ZONE AIR DISTANCE EFFECTIVENESS	CODE: TOTAL EXHAUST (CFM)	EXHAUST SPECIFIED ON PLANS (CFM)	$V_{oz}=(R_p*P_z+R_a*A_z)/E_z$ MINIMUM OUTSIDE AIR REQUIRED (CFM)	MINIMUM CFM REQUIRED BY CODE	CFM SHOWN ON PLANS	% OUTSIDE AIR REQUIRED IN ROOM
106 Office	Office	95	0.06	5	0.475	5	0.8	0	0	10.09375	67.29166667	500	2.02%
105 Office	Office	93	0.06	5	0.465	5	0.8	0	0	9.88125	65.875	500	1.98%
									TOTAL OUTSIDE AIR REQUIRED (CFM):	24.225	% OUTSIDE AIR OF EQUIPMENT	15.00%	
									TOTAL OUTSIDE AIR SPECIFIED (CFM):	***180***	EQUIPMENT TOTAL SUPPLY (CFM):	*1200*	

3 CONSULTING ENGINEERS
1415 Park Ave. W., Denver, CO 80205
p 303.357.1998
3consultingengineers.com

COLORADO LICENSED
BRUCE PACHINGER
51373
PROFESSIONAL ENGINEER
2023-01-18

3 CONSULTING ENGINEERS

JESSE GOLDMAN, ARCHITECT
2696 S COLORADO BLVD, SUITE 525
DENVER, CO 80222
(303) 962-9164

THESE DRAWINGS AND SPECIFICATIONS AS INSTRUMENTS OF SERVICE, ARE AND SHALL REMAIN THE PROPERTY OF CSHQA AND THE ARCHITECT FOR THE PROJECT FOR WHICH THEY ARE MADE IS EXECUTED OR PUBLISHED. THE REPRODUCTION OF THESE PLANS SHALL NOT BE USED BY ANY PERSON OR ENTITY ON OTHER PROJECTS FOR ADDITIONS TO THIS PROJECT OR FOR COMPLETION OF THIS PROJECT WHEN PHASES WITHOUT THE WRITTEN PERMISSION OF CSHQA ARCHITECTS AFFILIATES. Copyright © 2023

QUICK N CLEAN CAR WASH
PARKER RD. & PINE LANE AVE.
PARKER, CO 80134

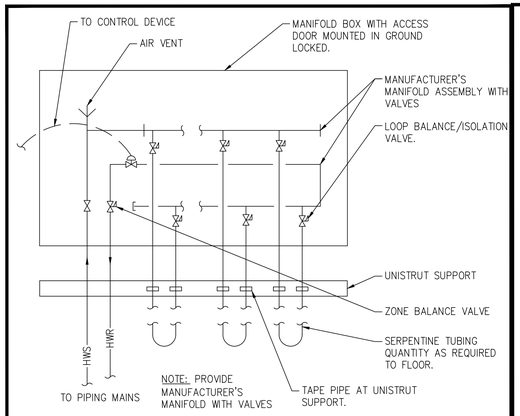
CSHQA
2696 S COLORADO BLVD, SUITE 525
DENVER, CO 80222
(303) 962-9164
www.cshqa.com

PROJECT	DATE
20037	1-16-2023
DRAWN	CHECKED
JCB	JCB

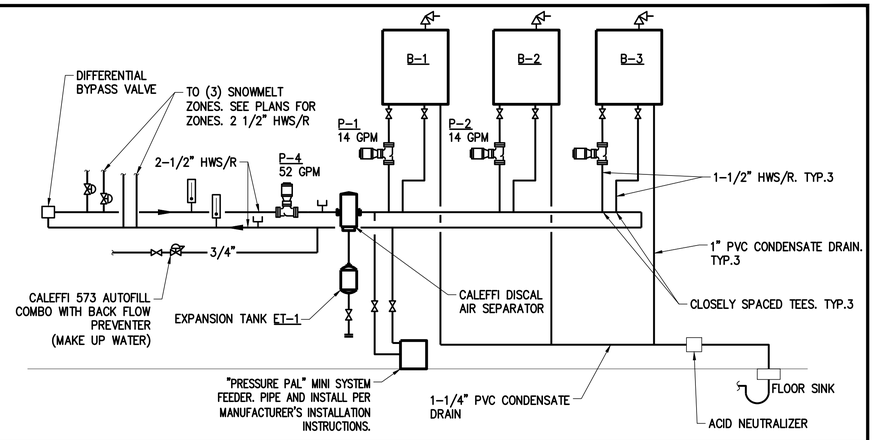
REVISED

SHEET TITLE
MECHANICAL DETAILS

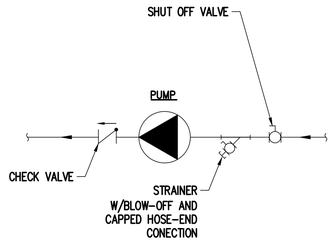
SHEET
M2.1



MANIFOLD J
NO SCALE



BOILER PLANT
NO SCALE



INLINE PUMP DETAIL
NO SCALE

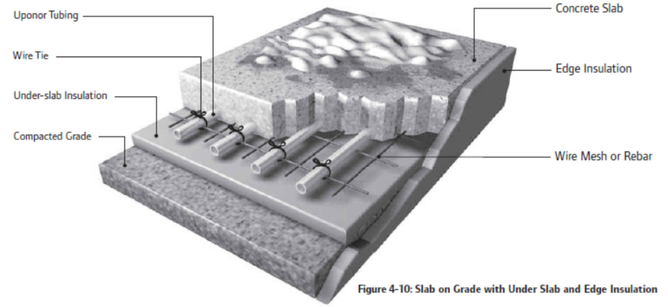


Figure 4-10: Slab on Grade with Under Slab and Edge Insulation

SNOWMELT INSTALLATION DETAIL
NO SCALE

3 CONSULTING ENGINEERS
1415 Park Ave. W., Denver, CO 80205
p 303.357.1998
3consultingengineers.com

COLORADO LICENSED BRUCE PACHNANDA 51373 PROFESSIONAL ENGINEER
2023-01-18

JESSE GOLDMAN, ARCHITECT
2696 S COLORADO BLVD, SUITE 525
DENVER, CO 80222
(303) 962-9164

THESE DRAWINGS AND SPECIFICATIONS, AS INSTRUMENTS OF SERVICE, ARE AND SHALL REMAIN THE PROPERTY OF JESSE GOLDMAN, ARCHITECT. THE PROJECT FOR WHICH THEY ARE MADE IS EXECUTED NOT BE USED BY ANY PERSON OR ENTITY ON OTHER COMPLETION OF THIS PROJECT WHEN PHASES WITHOUT THE WRITTEN PERMISSION OF JESSE GOLDMAN, AIA, NCARB AFFILIATES. Copyright © 2023

QUICK N CLEAN CAR WASH
PARKER RD. & PINE LANE AVE.
PARKER, CO 80134

2696 S COLORADO BLVD, SUITE 525
DENVER, CO 80222
(303) 962-9164
www.cshqa.com

PROJECT	DATE
20037	1-16-2023
DRAWN	CHECKED
JCB	JCB

REVISED

SHEET TITLE
MECHANICAL DETAILS

SHEET
M2.2

ELECTRICAL SPECIFICATIONS

ELECTRICAL SPECIFICATION

BASIC ELECTRICAL REQUIREMENTS

GENERAL REQUIREMENTS

A. SEE GENERAL CONDITIONS AND ALL OTHER REQUIREMENTS RELATING TO ELECTRICAL SYSTEMS FOR THIS PROJECT.

B. PROVIDE ALL ITEMS FOR COMPLETE AND SUCCESSFUL OPERATION OF ALL ELECTRICAL SYSTEMS.

C. ELECTRICAL DRAWINGS ARE DIAGRAMMATIC ONLY. ELECTRICAL SUBCONTRACTOR IS RESPONSIBLE FOR INSTALLATION OF ALL WORK ACCORDING TO ARCHITECTURAL, STRUCTURAL, AND MECHANICAL DRAWINGS AS WELL. AS LONG AS PROPER COORDINATION HAS BEEN PRESENT.

D. WORD "PROVIDE" SHALL MEAN "THIS CONTRACTOR SHALL FURNISH, INSTALL AND CONNECT".

E. VISIT SITE AND INCLUDE ALLOWANCE IN BID FOR ALL COSTS RELATED TO THE ELECTRICAL INSTALLATION.

F. DEMONSTRATE THE OPERATION OF ALL ELECTRICAL SYSTEMS FOR THE OWNER AT A TIME AS DIRECTED BY ARCHITECT.

G. LAY OUT ALL WORK IN ADVANCE. DO NOT DEFACE WORK OF OTHER TRADES. INSTALL ALL SLEEVES AND BLOCKOUTS; WATERPROOF AS REQUIRED.

H. ALL OUTAGES ON THE ENTIRE OR ON PORTIONS OF EXISTING OR NEW ELECTRICAL SYSTEM SHALL BE MINIMIZED AND SHALL BE COORDINATED WITH THE OWNER AND UTILITY COMPANY. OUTAGE DURATION SHALL BE AS ACCEPTED BY THE OWNER AND SHALL BE SCHEDULED THREE (3) DAYS IN ADVANCE. INCLUDE AN OVERTIME ALLOWANCE IN THE BID FOR PERFORMANCE OF WORK REQUIRING OUTAGES AT SUCH A TIME AS IS APPROVED BY THE OWNER.

I. FIELD CHECK ALL EXISTING CONDITIONS AND INCLUDE AN ALLOWANCE IN THE BID FOR THE REMOVAL AND/OR RELOCATION OF EXISTING CONDUITS, WIRES, DEVICES, FIXTURES, ETC., AS INDICATED ON THE PLANS OR AS REQUIRED TO COORDINATE AND ADAPT NEW AND EXISTING ELECTRICAL SYSTEMS TO ALL OTHER WORK.

J. FURNISH AND INSTALL ALL MATERIALS AND EQUIPMENT AND PROVIDE ALL LABOR REQUIRED TO COMPLETE THE WORK SHOWN ON THE DRAWINGS. ALL OTHER WORK AND MISCELLANEOUS ITEMS NOT SPECIFICALLY MENTIONED BUT REQUIRED FOR TESTING THE SYSTEM SHALL BE PROVIDED. IT IS THE INTENT OF DRAWINGS AND SPECIFICATIONS THAT ALL SYSTEMS BE COMPLETE AND OPERABLE.

STANDARDS

A. ALL ELECTRICAL MATERIALS SHALL BE NEW (EXCEPT IF INDICATED OR SPECIFIED OTHERWISE), IN FIRST-CLASS CONDITION, UNDERWRITERS' LABORATORIES, INC. (UL) APPROVED, AND SHALL COMPLY WITH APPLICABLE NEMA STANDARDS.

B. COMPLY WITH ALL APPLICABLE LOCAL AND STATE ORDINANCES AND LATEST EDITION OF: IBC – INTERNATIONAL BUILDING CODE, 2020 NEC NATIONAL ELECTRICAL CODE, NFPA CODES, AND WITH THE REQUIREMENTS OF UTILITY AND TELEPHONE COMPANIES FURNISHING SERVICE.

C. PROCURE AND PAY FOR ALL PERMITS, LICENSES AND LIABILITY INSURANCE, ETC. FURNISH CERTIFICATE OF FINAL INSPECTION AND APPROVAL FROM LOCAL INSPECTOR.

D. MATERIAL SHALL BE AS SPECIFIED UNLESS PRIOR ACCEPTANCE HAS BEEN OBTAINED FROM ARCHITECT SEVEN (7) DAYS BEFORE BID OPENING.

GUARANTEE

A. REPLACE ANY WORK OR MATERIAL INSTALLED OR FURNISHED UNDER THIS CONTRACT WHICH DEVELOPS DEFECTS, EXCEPT FROM NORMAL WEAR, WITHIN ONE (1) YEAR AFTER COMPLETION.

COORDINATION

A. PRIOR TO FABRICATION OR INSTALLATION OF ANY ELECTRICAL WORK, PARTICIPATE IN DETAILED COORDINATION PLANNING MEETINGS WITH ALL OTHER CONSTRUCTION TRADES, UNDER THE DIRECTION OF THE GENERAL CONTRACTOR, SO AS TO COMPLETELY ESTABLISH ROUTINGS, ELEVATIONS, SPACE REQUIREMENTS, AND COORDINATION OF ACCESS, LAYOUT, AND SUSPENSION REQUIREMENTS IN RELATIONSHIP TO THE BUILDING STRUCTURE AND THE WORK OF ALL OTHER TRADES.

B. THIS CONTRACTOR SHALL COORDINATE DIVISION 16 WORK WITH THE INSTALLER OF DIVISION 15 AND OTHER WORK TO ENSURE THAT CODE REQUIRED CLEARANCES RELATING TO SPACE REQUIRED FOR ACCESS TO ELECTRICAL EQUIPMENT, ALONG WITH LIMITATIONS RELATING TO INSTALLATION OF MECHANICAL OR OTHER PIPING, DUCTWORK, OR EQUIPMENT ABOVE, OR ADJACENT TO, ELECTRICAL APPARATUS, ARE PROPERLY MAINTAINED.

C. REFER TO ARCHITECTURAL DRAWINGS FOR EXACT LOCATION AND MOUNTING HEIGHTS OF DEVICES. FINAL LOCATION OF ALL DEVICES TO BE DETERMINED BY THE ARCHITECT.

D. PRIOR TO COMMENCING CONSTRUCTION, NOTIFY ENGINEER OF ANY DISCREPANCIES BETWEEN ELECTRICAL DRAWINGS AND ANY OTHER PROJECT DRAWINGS (I.E., ARCHITECTURAL, FURNITURE SYSTEM, MECHANICAL, STRUCTURAL, ETC) AS WELL AS DISCREPANCIES BETWEEN DRAWINGS AND EXISTING FIELD CONDITIONS.

E. ALL OPENINGS MADE IN FIRE-RATED WALLS, FLOORS OR CEILINGS, SHALL BE PATCHED AND MADE TIGHT IN A MANNER TO CONFORM TO THE FIRE RATING FOR THE SURFACE PENETRATED.

CONDUIT SYSTEMS

A. RIGID CONDUIT, INTERMEDIATE METALLIC CONDUIT, AND/OR ELECTRICAL METALLIC TUBING AS PERMITTED BY NEC.

B. SCHEDULE 40, RIGID PVC PLASTIC CONDUIT FOR ALL LOCATIONS DIRECTLY IN EARTH, GRAVEL, ETC, OR DIRECTLY BELOW OR IN CONCRETE SLAB-ON-GRADE.

C. PROVIDE FLEXIBLE METAL CONDUIT WHERE WIRING MUST BE FISHED OR FOR EQUIPMENT, MOTORS, LIGHTING FIXTURE OR TRANSFORMER CONNECTIONS.

D. ALL EMT CONNECTORS AND COUPLINGS SHALL BE STEEL, COMPRESSION GLAND OR SETSCREW TYPE. CONNECTORS AND COUPLINGS MADE OF MALLEABLE IRON OR OTHER MATERIALS ARE NOT ACCEPTABLE.

E. INSTALL RACEWAYS CONCEALED. SURFACE MOUNT CONDUITS IN ELECTRICAL AND MECHANICAL ROOMS OR WHERE APPROVED BY THE ARCHITECT.

F. RACEWAY AND OUTLET SUPPORTS:

1. TOGGLE BOLTS IN HOLLOW MASONRY.
2. EXPANSION BOLTS IN CONCRETE OR BRICK.
3. MACHINE SCREWS ON METAL SURFACES.
4. WOOD SCREWS ON WOOD CONSTRUCTION.

BUILDING WIRE AND CABLE

A. MINIMUM WIRE SIZE FOR BRANCH CIRCUITS NO. 12 AWG. EXCEPT FOR CONTROL CIRCUITS, WHICH MAY BE NO. 14 AWG. SIGNAL CIRCUITS WIRE SIZE SHALL BE AS INDICATED ON THE DRAWINGS. ALL WIRING SHALL BE ROUTED WITHIN RACEWAYS.

B. CONDUCTOR INSULATION SHALL BE OF TYPE RECOGNIZED BY THE NATIONAL ELECTRIC CODE AS APPROVED FOR ITS PARTICULAR APPLICATION.

1. ALL WIRES REGARDLESS OF SIZE, TYPE THWN AND THHN EXCEPT AS NOTED.
2. ALL WIRING IN METAL ROOF DECKS, IN OR NEAR ROOF INSULATION, OR EXPOSED TO SUN, TYPE THW.

C. THE USE OF MC CABLE IS ONLY PERMITTED IN CONCEALED AREAS. THE OPEN AREA SHALL BE HARD-PIPED.

D. SPLICES FOR NO. 8 AND SMALLER WIRE, WIRE OR WING NUTS.

E. ALL WIRE SHALL BE COPPER OR ALUMINUM, INSULATED FOR 600 VOLTS.

F. ALL WIRES SHALL BE COLOR CODED. WIRES NO. 8 AWG AND SMALLER SHALL BE FACTORY COLOR-CODED. WIRE NO. 6 AWG AND LARGER MAY BE COLOR-CODED BY FIELD PAINTING OR COLOR TAPING OF 6 INCH LENGTH OF EXPOSED ENDS.

1. 120/208V SYSTEM: PHASE A = BLACK, B = RED, C = BLUE, NEUTRAL = WHITE, GROUND = GREEN
2. 277/480V SYSTEM: PHASE A = BROWN, B = ORANGE, C = YELLOW NEUTRAL = GRAY, GROUND = GREEN W/YELLOW

BOXES

A. FOUR-INCH (4") SQUARE OR OCTAGONAL, ZINC-COATED SHEET STEEL BOXES.

B. PROVIDE THREE-EIGHTHS INCH (3/8") NO BOLT FIXTURE STUDS FOR FIXTURE OUTLETS.

C. PROVIDE COVERS SET TO COME FLUSH WITH FINISHED WALLS.

D. UTILITY OR SECTIONAL SWITCH BOXES ONLY WHERE PERMITTED.

E. VERIFY MOUNTING HEIGHTS OF ALL OUTLETS PRIOR TO INSTALLATION. LOCATE OUTLETS TO CLEAR COUNTERS, BENCHES, BASEBOARDS OR FINTUBE HEATERS, ETC, OR AS REQUIRED TO SERVICE EQUIPMENT.

F. SUPPORT: OUTLET, DEVICE, PULL AND JUNCTION BOXES RIGIDLY FROM THE STRUCTURE EITHER DIRECTLY OR BY USING A RIGID SUPPORT, IN ACCORDANCE WITH REQUIREMENTS OF ART. 370-23 OF THE NEC.

WIRING DEVICES

A. DEVICES SHALL BE AS FOLLOWS:

1. SPECIFICATION GRADE RECEPTACLES: HUBBELL 5362 SERIES OR AS ACCEPTED; GROUND FAULT CIRCUIT INTERRUPTERS: HUBBELL GF5362, OR AS ACCEPTED. MOUNTING HEIGHT +18 INCH A.F.F. TO CENTER OR AS NOTED.
2. WEATHERPROOF OUTLET COVER, HUBBELL 5200 SERIES, OR AS ACCEPTED.
3. AC QUIET-OPERATING TYPE SWITCHES: HUBBELL HBL1221 SERIES, OR AS ACCEPTED. MOUNTING HEIGHT +42 INCH A.F.F. TO CENTER OR AS NOTED.
4. DIMMER SWITCH, "SLIDE TO OFF" TYPE, WITH A VA (W) RATING SUITABLE FOR THE LOAD SERVED: LUTRON NOVA SERIES, OR AS ACCEPTED. MOUNTING HEIGHT +42 INCH A.F.F. TO CENTER OR AS NOTED.

B. DEVICE PLATES SHALL BE: NYLON, EXCEPT AS DIRECTED BY ARCHITECT.

C. SPECIAL PURPOSE RECEPTACLES OR OTHER DEVICES SHALL BE WHITE AS INDICATED ON THE DRAWINGS. CONFIRM COLOR WITH ARCHITECT.

D. WIRING DEVICES AND DEVICE PLATES COLOR SHALL BE AS DIRECTED BY THE ARCHITECT AND OWNER.

GROUNDING

A. ALL SERVICE EQUIPMENT, CONDUIT SYSTEMS, SUPPORTS, CABINETS, LIGHTING STANDARDS, POLES, EQUIPMENT, FIXTURES, ETC, AND THE GROUNDED CIRCUIT CONDUCTOR SHALL BE PROPERLY GROUNDED IN ACCORDANCE WITH THE LATEST ISSUE OF THE NATIONAL ELECTRICAL CODE. PROVIDE BONDING JUMPERS, GROUNDING BUSHINGS, CLAMPS, ETC, FOR COMPLETE GROUNDING.

1. PROVIDE A SEPARATE GROUNDING CONDUCTOR, SECURELY GROUNDED ON EACH SIDE OF ALL RACEWAYS CONTAINING SECTIONS OF PLASTIC, FIBER, ASBESTOS CEMENT, OR FLEXIBLE RACEWAYS. SIZE IN ACCORDANCE WITH THE NATIONAL ELECTRICAL CODE.
2. PROVIDE A GREEN GROUNDING JUMPER FROM THE GROUND SCREW TO A BOX GROUNDING SCREW OR CLIP FOR ALL GROUNDING TYPE DEVICES. USE INSULATED WIRE.
3. PROVIDE A SEPARATE EQUIPMENT GROUNDING CONDUCTOR IN EVERY FEEDER AND BRANCH CIRCUITS, INCLUDING MC CABLE. IF THE SIZE IS NOT INDICATED ON THE DRAWINGS, SIZE IN ACCORDANCE WITH TABLE 250-95 OF NEC.

EQUIPMENT WIRING SYSTEM

A. WHERE OUTLETS ARE INDICATED FOR MISCELLANEOUS EQUIPMENT REQUIRING ELECTRICAL POWER OR CONTROL, PROVIDE WIRE, CONDUIT, OUTLETS, DISCONNECT SWITCHES, ETC, AND MAKE ALL REQUIRED CONNECTIONS.

B. PROVIDE GROUNDING FOR ALL EQUIPMENT IN ACCORDANCE WITH NATIONAL ELECTRICAL CODE.

C. VERIFY EXACT CONNECTIONS REQUIRED FOR ALL EQUIPMENT PRIOR TO ROUGH IN.

D. FOR INDIVIDUALLY-MOUNTED MOTOR CONTROLLERS SUPPLIED UNDER SPECIFICATIONS DIVISIONS OTHER THAN DIVISION 16, CONTROLLERS AND DISCONNECTS SHALL BE SUPPLIED BY THE EQUIPMENT SUPPLIER. ELECTRICAL CONTRACTOR TO SET IN PLACE AND PROVIDE ALL REQUIRED CONNECTIONS.

ELECTRIC SERVICE

A. COMMERCIAL ELECTRICAL SERVICE IS NEW AT 800 AMPS, 277/480V, SEE ONE-LINE.

DISTRIBUTION EQUIPMENT

A. ALL BRANCH CIRCUITS ARE CLASSIFIED AS NEW.

DRY TYPE TRANSFORMERS

A. 75 kVA 480-208V WYE TO WYE.

PANELBOARDS

A. DEAD-FRONT, CIRCUIT BREAKER TYPE, KEY LOCK, AND TYPED DIRECTORY CARDS. PANELS SHALL BE "DOOR-IN-DOOR" CONSTRUCTION.

B. THERMAL MAGNETIC CIRCUIT BREAKERS, COMPLETELY INTERCHANGEABLE, BOLTED TO THE BUS. MULTI-POLE BREAKERS SHALL HAVE COMMON, INTERNAL TRIP.

C. MINIMUM INTEGRATED SHORT CIRCUIT RATING: 10,000 AMPERES RMS SYMMETRICAL FOR 250 VOLT PANELBOARDS;

D. EXCEPT SPECIFIED OTHERWISE, PANELBOARDS TYPE SHALL BE AS FOLLOWS:

MANUFACTURER	208/120V
SIEMENS	10K AIC

E. PANEL BUSES SHALL BE COPPER.

F. LOADCENTERS ARE NOT PERMITTED.

ENCLOSED MOTOR CONTROLLERS

A. EXCEPT SPECIFIED OTHERWISE, MOTOR CONTROLLER TYPE SHALL BE AS MANUFACTURED BY: ALLEN-BRADLEY, CUTLER-HAMMER, GENERAL ELECTRIC, AND SQUARE-D.

B. MANUAL MOTOR CONTROLLER: FULL-VOLTAGE STARTING, NEMA IS 2, AC, HEAVY-DUTY CLASS, MANUALLY OPERATED CONTROLLER WITH: 1) TOGGLE OPERATOR AND THERMAL OVERLOAD ELEMENT FOR FRACTIONAL HORSEPOWER INDUCTION MOTORS; OR: 2) OVERLOAD ELEMENT, RED PILOT LIGHT, 2 NO/NC FIELD INTERCHANGEABLE AUXILIARY CONTACTS AND PUSH BUTTON OPERATOR FOR INDUCTION MOTORS 1/2 HP AND LARGER.

C. AUTOMATIC MAGNETIC MOTOR CONTROLLERS: FULL VOLTAGE STARTING, NEMA IS 2, AC, HEAVY-DUTY CLASS, MAGNETIC CONTROLLER RATED IN HORSEPOWER. CONTROLLER SHALL BE PROVIDED WITH: 1) TWO (2) NO/NC FIELD CONVERTIBLE AUXILIARY CONTACTS IN ADDITION TO FACTORY SUPPLIED SEAL-IN CONTACTS; 2) COVER MOUNTED INCANDESCENT RED AND GREEN PILOT LIGHTS AND PUSHBUTTON OPERATOR; 3) ROTARY TYPE SELECTOR SWITCH; 4) CONTROL POWER TRANSFORMER WITH 120 VOLT SECONDARY VOLTAGE AND VA RATING AS REQUIRED BY THE LOAD SERVED. CONTROL TRANSFORMER SHALL BE FUSE PROTECTED ON BOTH, PRIMARY AND SECONDARY WINDINGS.

D. INSTALL ENCLOSED CONTROLLERS WHERE INDICATED IN ACCORDANCE WITH MANUFACTURER'S INSTRUCTIONS. HEIGHT OF THE OPERATING HANDLE NOT OVER 5 FT TO FINISHED FLOOR.

E. SELECT AND INSTALL OVERLOAD HEATER ELEMENTS IN MOTOR CONTROLLERS TO MATCH INSTALLED MOTOR CHARACTERISTICS.

F. MECHANICAL EQUIPMENT MOTORS AND MOTOR STARTERS FURNISHED BY MECHANICAL CONTRACTOR.

G. PROVIDE FEEDER CIRCUITS TO MECHANICAL EQUIPMENT AND MOTOR STARTERS AND MAKE ALL CONNECTIONS.

H. PROVIDE NORMAL DUTY, HP RATED, QUICK-MAKE, QUICK-BREAK, FUSIBLE OR NON-FUSIBLE DISCONNECT SWITCHES AS REQUIRED BY NEC.

LIGHTING FIXTURES

A. PROVIDE ALL NEW LIGHTING FIXTURES COMPLETE WITH LAMPS, BALLASTS, REFLECTORS, PLASTER FRAMES, FLANGES, LOUVERS, STEM HANGERS, ETC., ASSEMBLED AND READY FOR OPERATION AND AS DESCRIBED ON THE DRAWINGS. (VERIFY CEILING TYPES.)

B. MOUNT ALL FIXTURES AT POSITION AND HEIGHT TO CLEAR DUCTS, ETC.

C. PROVIDE TWO NO. 12 GAUGE HANGERS CONNECTED FROM THE FIXTURE HOUSING TO THE STRUCTURE, IN ADDITION TO THE FIXTURE REQUIRED ATTACHMENT TO THE CEILING SUSPENSION SYSTEM. FIXTURE SUPPORT SHALL MEET THE REQUIREMENTS OF STANDARD 25-2 OF THE UBC.

VOICE AND DATA CONDUIT SYSTEM

A. PROVIDE OUTLETS WHERE INDICATED ON THE DRAWINGS. PROVIDE 3/4 INCH CONDUIT WITH PULL WIRE FROM EACH OUTLET TO 6 INCH ABOVE ACCESSIBLE CEILING. BEND CONDUIT 90 DEGREES AND INSTALL CONDUIT BUSHINGS AT CONDUIT ENDS.

B. OUTLETS SHALL CONSIST OF FOUR-INCH (4") SQUARE BY 2-1/2 INCH DEEP BOX WITH SINGLE GANG COVER. OUTLET PLATES COLOR AND FINISH SHALL MATCH OTHER DEVICE PLATES.

C. PROVIDE TELEPHONE TERMINALS BOARDS AS SHOWN ON DRAWINGS.

D. ALL COMMUNICATIONS CABLES ABOVE CEILING SHALL BE PLENUM RATED. SUPPORT CABLES FROM THE STRUCTURE. DO NOT LAY CABLES ON TOP OF THE CEILING SYSTEM.

E. SUPPORT AND INSTALL VOICE AND DATA RACEWAY SYSTEM AND CABLES FOLLOWING EIA/TIA STANDARDS.

FIRE ALARM SYSTEM

A. DESIGN-BUILD PROVIDE FIRE ALARM PLANS TO THE DENVER FIRE DEPARTMENT IF NECESSARY.

B. PROVIDE COMPLIANCE WITH 2012 IBC 107.3.4.1 FOR FIRE ALARM SYSTEM SHOP DRAWINGS AND LIST AS A DEFERRED SUBMITTAL ON THE PLANS. IN ADDITION, PROVIDE SHOP DRAWINGS SEALED BY PROFESSIONAL ENGINEER PER 2012 IBC 107.3.4.

C. SEPARATELY BOUND FIRE ALARM SYSTEM PERFORMANCE SPECIFICATIONS ARE NOT PROVIDED IN THE PROJECT MANUAL TO SHOW MINIMUM REQUIREMENTS FOR FIRE ALARM SYSTEM MATERIALS AND EQUIPMENT, AND THEIR INSTALLATION.

COMMISSIONING

A. COMMISSIONING CONTRACTOR TO PROVIDE ELECTRICAL POWER AND SYSTEM COMMISSIONING AS REQUIRED PER INTERNATIONAL ENERGY CONSERVATION CODE SECTION C408. PROVIDE ALL REQUIREMENTS PER THIS SECTION AS REQUIRED BY AUTHORITY HAVING JURISDICTION. SUBMIT PLAN, DATA COLLECTING WORKSHEETS, AND ALL OTHER REQUIRED DOCUMENTATION FOR REVIEW PRIOR TO PERFORMING WORK TO DESIGN TEAM FOR REVIEW.

GENERAL NOTES

A. EGRESS LIGHTING SHALL COMPLY WITH IBC SECTION 1006.

END OF SPECIFICATION

SHEET INDEX

JURISDICTION: PARKER, COLORADO

ELECTRICAL CODE: 2020 NATIONAL ELECTRICAL CODE

ENERGY CODE: 2021 INTERNATIONAL ENERGY CONSERVATION CODE

SHEET NO.	SHEET DESCRIPTION	ISSUE 01/18/23 – PERMIT SET
E0.1	ELECTRICAL COVER SHEET	X
E0.2	ELECTRICAL LEGEND & NOTES	X
E1.0	ELECTRICAL SITE PLAN	X
E1.1	ELECTRICAL LIGHTING PLAN	X
E1.2	ELECTRICAL ROOF PLAN	X
E2.1	ELECTRICAL POWER PLAN	X
E3.1	ELECTRICAL ONE-LINE & SCH.	X
E3.2	ELECTRICAL FIXTURE SCH. & COMCHECK	X

COLORADO LICENSED BRUCE PACHINGER 51373 PROFESSIONAL ENGINEER

2023-01-18

3 CONSULTING ENGINEERS

JESSE GOLDMAN, ARCHITECT
2696 S COLORADO BLVD, SUITE 525
DENVER, CO 80222
(303) 962-9164

THESE DRAWINGS AND SPECIFICATIONS AS INSTRUMENTS OF SERVICE, ARE AND SHALL REMAIN THE PROPERTY OF CSHQA. THE USE OF THESE PLANS ON THE PROJECT FOR WHICH THEY ARE MADE IS EXECUTED AS THE WORK OF A PROFESSIONAL ENGINEER. THEY ARE NOT TO BE USED BY ANY PERSON OR ENTITY ON OTHER PROJECTS OR FOR ADDITIONS TO THIS PROJECT OUTSIDE THE SPECIFIC AGREEMENT FOR WHICH THEY WERE PREPARED BY CSHQA OR CSHQA'S CONSULTANTS OR AFFILIATES. Copyright © 2023

CSHQA
2696 S COLORADO BLVD, SUITE 525
DENVER, CO 80222
(303) 962-9164
www.cshqa.com

QUICK N CLEAN CAR WASH

PARKER RD. & PINE LANE AVE.

PARKER, CO 80134

PROJECT	DATE
20037	1-16-2023
DRAWN	CHECKED
JCB	JCB

REVISED

SHEET TITLE

ELECTRICAL COVER SHEET

SHEET

E0.1

3 CONSULTING ENGINEERS
1415 Park Ave. W., Denver, CO 80205
p 303.357.1998
3consultingengineers.com

ELECTRICAL LEGEND

GENERAL POWER

- 20 AMP, 120V, NEMA 5-20R, DUPLEX RECEPTACLE
- 20 AMP, 120V, NEMA 5-20R, QUAD RECEPTACLE
- 20 AMP, 120V, NEMA 5-20R, DEDICATED DUPLEX RECEPTACLE.
- 20 AMP, 120V, NEMA 5-20R, DEDICATED DOUBLE DUPLEX RECEPTACLE (QUAD)
- 20 AMP, 120V, NEMA 5-20R, SWITCHED DUPLEX RECEPTACLE
- 20 AMP, 120V, NEMA 5-20R, FLOOR MOUNTED DUPLEX RECEPTACLE, 3/4" CONDUIT RUN CONCEALED IN FLOOR SLAB
- 20 AMP, 120V, NEMA 5-20R, FLOOR MOUNTED QUAD RECEPTACLE, 3/4" CONDUIT RUN CONCEALED IN FLOOR SLAB
- 20 AMP, 120V, NEMA 5-20R DUPLEX FLOOR RECEPTACLE
- DISCONNECT SWITCH, NON-FUSED, 250V, U.N.O.
- FUSED DISCONNECT, SEE ONE-LINE OR NOTATION
- COMBINATION STARTER/DISCONNECT (SIZE AS INDICATED)
- MAGNETIC STARTER
- JUNCTION BOX, WALL MOUNTED
- JUNCTION BOX, FLOOR MOUNTED
- JUNCTION BOX, CEILING MOUNTED
- SPECIAL PURPOSE RECEPTACLE, FLOOR MOUNTED, NEMA CONFIGURATION AS NOTED ON PLAN
- SPECIAL PURPOSE RECEPTACLE, WALL MOUNTED, NEMA CONFIGURATION AS NOTED ON PLAN
- C — SPECIAL PURPOSE RECEPTACLE, CEILING MOUNTED, CONFIGURATION AS NOTED ON PLAN
- C — FURNITURE FEED , CEILING MOUNTED, CONFIGURATION AS NOTED ON PLAN 8 WIRE TRI-CIRCUITRY
- M — MOTOR: SEE ADJACENT NOTATION FOR HORSEPOWER RATING
- PM-XX — PLUGMOLD, REFER TO DRAWING FOR LENGTHS
- P — PHOTOCELL
- EMERGENCY POWER OFF BUTTON (EPO)
- MOLDED CASE CIRCUIT BREAKER
- R — RELAY
- TC — TIME-CLOCK
- D — MOTORIZED DAMPER
- T — TRANSFORMER
- SURFACE MOUNTED ELECTRICAL PANEL
- RECESSED MOUNTED ELECTRICAL PANEL

TELE/DATA COMMUNICATIONS

- TBB, (TELEPHONE BACKBOARD) EC TO ENSURE COORDINATION AND LOCATION WITH LOCAL UTILITY, PRIOR TO ROUGH-IN AND INSTALLATION.
- DATA JUNCTION BOX MOUNTED 18" AFF, UNLESS OTHERWISE NOTED. INSTALL 1" CONDUIT FROM BOX INTO ACCESSIBLE LOCATION ABOVE FINISHED CEILING. INSTALL PLASTIC BUSHING ON TOP OF EACH CONDUIT.
- TELEPHONE JUNCTION BOX MOUNTED 18" AFF, UNLESS OTHERWISE NOTED. INSTALL 1" CONDUIT FROM BOX INTO ACCESSIBLE LOCATION ABOVE FINISHED CEILING. INSTALL PLASTIC BUSHING ON TOP OF EACH CONDUIT.
- JUNCTION BOX FOR INSTALLATION OF TV OUTLET. MOUNTED 18" AFF, UNLESS OTHERWISE NOTED. INSTALL 1" CONDUIT FROM BOX TO 3" INTO ACCESSIBLE LOCATION ABOVE FINISHED CEILING. COORDINATE MOUNTING HEIGHT WITH ARCHITECT PRIOR TO ROUGH-IN.
- FLOOR JUNCTION BOX FOR INSTALLATION OF COMMUNICATION OR DATA OUTLET. INSTALL 1" CONDUIT FROM BOX CONCEALED IN FLOOR SLAB TO WALL AND TO 3" INTO ACCESSIBLE LOCATION ABOVE FINISHED CEILING.
- S — SPEAKER, CEILING MOUNTED
- S — SPEAKER, WALL MOUNTED, 84" (CENTERLINE) A.F.F. OR 8" (CENTERLINE) BELOW CEILINGS THAT ARE 8'-0" OR LOWER, UNLESS NOTED OTHERWISE.
- C — CLOCK, 84" (CENTERLINE) A.F.F. OR 8" (CENTERLINE) BELOW CEILINGS THAT ARE 8'-0" OR LOWER, UNLESS NOTED OTHERWISE.
- V — VOLUME CONTROL
- I — INTERCOM MASTER - WALL
- WAP — WIRELESS ACCESS POINT
- PUSH BUTTON
- CLOSED CIRCUIT TELEVISION CAMERA
- CABLE TRAY
- KP — KEY PAD

LIGHTING

- PENDANT LUMINAIRE, SEE LUMINAIRE SCHEDULE FOR MOUNTING DETAILS
- SURFACE MOUNTED DOWNLIGHT, SEE LUMINAIRE SCHEDULE FOR MOUNTING DETAILS
- RECESSED MOUNTED DOWNLIGHT, SEE LUMINAIRE SCHEDULE FOR MOUNTING DETAILS
- WALL MOUNTED LIGHT FIXTURE, SEE LUMINAIRE SCHEDULE FOR MOUNTING DETAILS
- WALL WASH LIGHT FIXTURE, SEE LUMINAIRE SCHEDULE FOR MOUNTING DETAILS
- FLUORESCENT STRIP LIGHT, SEE LUMINAIRE SCHEDULE FOR MOUNTING DETAILS AND LIGHT FIXTURE LENGTHS
- 2' X 4' RECESSED LED LIGHT FIXTURE, SEE LUMINAIRE SCHEDULE FOR MOUNTING DETAILS, EMERGENCY LUMINAIRES ARE HATCHED.
- 2' X 4' SURFACE LED LIGHT FIXTURE, SEE LUMINAIRE SCHEDULE FOR MOUNTING DETAILS
- 2' X 2' RECESSED LED LIGHT FIXTURE, SEE LUMINAIRE SCHEDULE FOR MOUNTING DETAILS, EMERGENCY LUMINAIRES ARE HATCHED.
- 2' X 2' SURFACE MOUNTED LED LIGHT FIXTURE, SEE LUMINAIRE SCHEDULE FOR MOUNTING DETAILS
- 1' X 4' RECESSED LED LIGHT FIXTURE, SEE LUMINAIRE SCHEDULE FOR MOUNTING DETAILS
- 1' X 4' SURFACE MOUNTED LED LIGHT FIXTURE, SEE LUMINAIRE SCHEDULE FOR MOUNTING DETAILS
- 1' X 4' WALL MOUNTED LED LIGHT FIXTURE, SEE LUMINAIRE SCHEDULE FOR MOUNTING DETAILS
- LINEAR PENDANT LED LIGHT FIXTURE, SEE LUMINAIRE SCHEDULE FOR MOUNTING DETAILS
- TRACK LIGHTING FIXTURE, SEE LUMINAIRE SCHEDULE FOR MOUNTING DETAILS
- S — SINGLE POLE SWITCH
- S_3 — THREE WAY SWITCH
- S_4 — FOUR WAY SWITCH
- S_{OS} — OCCUPANCY SENSOR
- S_{TO} — MOTOR RATED SWITCH
- S_D — DIMMER SWITCH
- S_P — PILOT LIGHT
- A_a — LUMINAIRE TYPE, REFERENCING LUMINAIRE SCHEDULE, TYPICAL ALL FIXTURES. SUBSCRIPT, IF SHOWN, REFERENCE WALL SWITCH/CONTROL.
- CEILING FAN
- SINGLE HEAD POLE MOUNTED, EXTERIOR LIGHT FIXTURE, SEE PHOTOMETRIC, LUMINAIRE SCHEDULE FOR HEIGHT
- DOUBLE HEAD POLE MOUNTED, EXTERIOR LIGHT FIXTURE, SEE PHOTOMETRIC, LUMINAIRE SCHEDULE FOR HEIGHT
- QUAD HEAD POLE MOUNTED, EXTERIOR LIGHT FIXTURE, SEE PHOTOMETRIC, LUMINAIRE SCHEDULE FOR HEIGHT
- BOLLARD LUMINAIRE, SEE PHOTOMETRIC, LUMINAIRE SCHEDULE FOR HEIGHT

EGRESS LIGHTING

- EXIT SIGN. PROVIDE DIRECTIONAL ARROWS AS REQUIRED BY AHJ.
- COMBINATION EMERGENCY LIGHT/ EXIT SIGN (DOUBLE HEAD) PROVIDE DIRECTIONAL ARROWS AS REQUIRED BY AHJ.
- WALL MOUNTED EXIT SIGN. PROVIDE DIRECTIONAL ARROWS AS REQUIRED BY AHJ.
- EXTERIOR WALL MOUNTED EMERGENCY LIGHT.
- EMERGENCY LIGHT FIXTURE (DOUBLE HEAD) EC TO MOUNT AT 84" AFF, UNLESS SPECIFICALLY NOTED

BASIC LIGHTING CONTROL

- RC — ROOM CONTROL
- OS — CEILING MOUNTED OCCUPANCY SENSOR
- DS — CEILING MOUNTED DAYLIGHT SENSOR
- VS — CEILING MOUNTED VACANCY SENSOR

ONE LINE DIAGRAM

- PANEL — ELECTRICAL PANEL
- T-75 — TRANSFORMER, TYPE AND kVA RATING AS SHOWN
- 200A3P — SWITCH, RATING AS SHOWN
- 200A FRN — FUSE, FUSE AMPACITY AND TYPE AS SHOWN
- 200A3P — CIRCUIT BREAKER, RATING AS SHOWN
- GROUND CONNECTION
- M — UTILITY METER (AS REQUIRED BY UTILITY)
- SAFETY SWITCH, NON-FUSED, 250V, U.N.O.
- FUSED DISCONNECT
- COMBINATION STARTER/DISCONNECT (SIZE AS INDICATED)
- G — CIRCUIT BREAKER WITH GROUND FAULT PROTECTION
- G — FUSE WITH GROUND FAULT PROTECTION
- T-75 — TRANSFORMER, TYPE AND kVA RATING AS SHOWN
- CONNECTION
- CURRENT TRANSFORMER, RATED AS SPECIFIED OR REQUIRED
- SPD — SURGE PROTECTION DEVICE
- ATS — AUTOMATIC TRANSFER SWITCH
- GROUND ROD
- POLE MOUNTED UTILITY TRANSFORMER
- G — ENGINE GENERATOR

MISCELLANEOUS

- 1 — KEY NOTE DESIGNATION
- X1 — SHORT CIRCUIT TAG DESIGNATION
- 1 — FEEDER TAG DESIGNATION
- 1 — REVISION NUMBER DESIGNATION
- EXISTING LINEWORK - LIGHTER
- DEMOLITION LINEWORK - DASHED
- NEW LINEWORK - HEAVY

FIRE ALARM

- FACP — FIRE ALARM CONTROL PANEL
- FAA — FIRE ALARM REMOTE ANNUNCIATOR PANEL/ GRAPHIC MAP
- F — FIRE ALARM MANUAL PULL STATION, ADDRESSABLE DOUBLE ACTION
- GACP — GAS ALARM CONTROL PANEL
- S — SMOKE DETECTOR, ADDRESSABLE PHOTO ELECTRIC
- S_L — SMOKE DETECTOR, EARLY WARNING LASER DETECTION
- TD — THERMAL DETECTOR
- WALL MOUNTED ADA STROBE
- ADA HORN/SPEAKER WITH STROBE
- MINI HORN STROBE
- DUCT SMOKE DETECTOR
- MH — MAGNETIC DOOR HOLDER
- FS — FIRE ALARM FLOW SWITCH
- TS — FIRE ALARM TAMPER SWITCH
- RM — FIRE ALARM CONTROL MODULE (W/ INPUT/OUTPUT MODULE)
- RTS — DUCT DETECTOR REMOTE INDICATOR ALARM AND TEST

CONDUIT DESIGNATIONS

- XX-XX — PANEL NAME / CIRCUIT NUMBER - BRANCH CIRCUITS HOMERUN USE NUMBER 12 AWG WIRE, UNLESS OTHERWISE NOTED. ALL CIRCUITS SHALL CONTAIN A GROUND AND NEUTRAL CONDUCTOR, UNLESS NOTED OTHERWISE. CONTRACTOR SHALL PROVIDE MULTI-WIRE CIRCUIT HANDLE TIES AS FINAL FIELD INSTALLED WIRING REQUIRES.
- CONDUIT AND WIRE CONCEALED, 3/4" UNLESS OTHERWISE NOTED, CONDUIT USED FOR SWITCH LEGS, AND CONDUIT USED FOR CONTROL WIRING
- CONDUIT AND WIRE EMBEDDED IN CONCRETE OR BELOW GRADE
- CONDUIT DOWN
- CONDUIT UP

STANDARD MOUNTING HEIGHTS U.N.O.

EC TO REFER TO ALL ARCHITECTURAL DRAWINGS, ARCHITECTURAL DRAWINGS TAKE PRECEDENCE OVER THE ELECTRICAL DRAWINGS.

RECEPTACLES (EXTERIOR)	24"
RECEPTACLES (GARAGES)	44"
ALARMS, SWITCHES AND CONTROLS (CENTERLINE)	48"
TELEPHONE OUTLETS (CENTERLINE)	18"
TELEPHONE BACK BOARD (BTM.)	6"
DISC. SWITCHES	48"
STARTERS	48"
PANELS (TOP)	72"
CLOCK RECEPTACLES (CENTERLINE)	90"
FIRE ALARM PULL STATIONS (HANDLE)	44"
STROBES (CENTERLINE)	80"*
FIRE ALARM BELLS (EXTERIOR)	12'-0"
CONTROLS (FIRE ALARM CONTROL PANEL)	48"
ANNUNCIATION PANELS	48"
REMOTE INDICATING LIGHT (FIN. AREAS)	CEILING
EXIT SIGNS (WALL MOUNTED BTM.)	80"
TELEVISION OUTLETS	18"

ABBREVIATIONS

A	AMPERES
AC	ABOVE COUNTER
AFC	ABOVE FINISHED CEILING
AFEA	AREA FOR EVACUATION ASSISTANCE
AFF	ABOVE FINISHED FLOOR
AFG	ABOVE FINISHED GRADE
AHU	AIR HANDLING UNIT
AIC	AMPERE INTERRUPTING CURRENT
AL	ALUMINUM
ATS	AUTOMATIC TRANSFER SWITCH
AWG	AMERICAN WIRE GAUGE
AV	FOR AUDIO VISUAL MEDIA CABINET
BFF	BELOW FINISHED FLOOR
BKR	BREAKER
BOS	BOTTOM OF STRUCTURE
C	CONDUIT
CATV	CABLE TELEVISION SYSTEM
CB	CIRCUIT BREAKER
CCTV	CLOSED CIRCUIT TELEVISION
CKT	CIRCUIT
CLG	CEILING
CU	COPPER, CONDENSING UNIT
DISP	DIPOSAL
DN	DOWN
DPDT	DOUBLE POLE, DOUBLE THROW
DPST	DOUBLE POLE, SINGLE THROW
DW	DISHWASHER
DX	DIRECT EXPANSION
(E)	EXISTING
EC	ELECTRICAL CONTRACTOR
EF	EXHAUST FAN
EPO	EMERGENCY POWER OFF
ETR	EXISTING TO REMAIN
EWC	ELECTRIC WATER COOLER
F	FUSED
FBO	FURNISHED BY OTHERS
FF	FINISHED FLOOR
FLA	FULL LOAD AMPS
FLR	FLOOR
GC	GENERAL CONTRACTOR
GFI	GROUND FAULT CIRCUIT INTERRUPTER (PERSONAL PROTECTION ON DEVICE)
GFP	GROUND FAULT PROTECTED FROM UPSTREAM
GFI	RECEPTACLE OR CIRCUIT BREAKER
GFR	GROUND FAULT RELAY
GND	GROUND
HOA	HAND OFF AUTOMATIC
HP	HORSEPOWER
HPS	HIGH PRESSURE SODIUM
HSTAT	HUMIDISTAT
HTG	HEATING
HTR	HEATER
IG	ISOLATED GROUND
KCMIL	CIRCULAR MILS
KV	KILOVOLT
KVA	KILOVOLT AMPERE
KW	KILOWATT
KWH	KILOWATT HOUR
LED	LIGHT EMITTING DIODE
LF	LINEAR FEET
LRA	LOCKED ROTOR AMPS
LTG	LIGHTING
MCA	MINIMUM CIRCUIT AMPACITY
MCB	MAIN CIRCUIT BREAKER
MCC	MOTOR CONTROL CENTER
MD	MOTORIZED DAMPER
MDP	MAIN DISTRIBUTION PANEL
MFR	MANUFACTURER
MG	MOTOR GENERATOR
MLO	MAIN LUG ONLY
MSB	MAIN SWITCHBOARD
MTD	MOUNTED
MTS	MANUAL TRANSFER SWITCH
MW	MICROWAVE
N/A	NOT APPLICABLE
NIC	NOT IN CONTRACT
N/O,N/C	NORMALLY OPEN, NORMALLY CLOSED
N/L	NIGHT LIGHT
OAE	OR APPROVED EQUAL
OC	ON CENTER
OH	OVER HEAD
OV	OVEN
PDU	POWER DISTRIBUTION UNIT
PH,Ø	PHASE
PIV	POST INDICATOR VALVE
PJ	MOUNTED ON CEILING FOR PROJECTOR
PNL	PANEL
QTY	QUANTITY
(R)	RELOCATED
RCP	REFLECTED CEILING PLAN
REF	REFRIGERATOR
REV	REVISION
RLA	RUNNING LOAD AMPS
SD	SMOKE DETECTOR
SF	SQUARE FEET
SPD	SURGE PROTECTION DEVICE
ST	SHUNT TRIP
SPDT	SINGLE POLE, DOUBLE THROW
SPST	SINGLE POLE, SINGLE THROW
SWBD	SWITCHBOARD
TSTAT	THERMOSTAT
TL	TWISTLOCK
TV	TELEVISION
TYP	TYPICAL
UF	UNDERFLOOR
UG	UNDERGROUND
UL	UNDERWRITERS LABORATORIES, INC.
UNO	UNLESS NOTED OTHERWISE
UPS	UNINTERRUPTIBLE POWER SUPPLY
V	VOLTS
VAC	VOLTS ALTERNATING CURRENT, VACUUM
VAV	VARIABLE AIR VOLUME
VM	VENDING MACHINE
W	WATTS
W/	WITH
W/O	WITHOUT
WP	WEATHERPROOF
XFMR	TRANSFORMER
XP	EXPLOSION PROOF

3 CONSULTING ENGINEERS
1415 Park Ave. W., Denver, CO 80205
p 303.357.1998
3consultingengineers.com

COLORADO LICENSED
BRUCE PACHINGER
51373
PROFESSIONAL ENGINEER
2023-01-18

3 CONSULTING ENGINEERS

JESSE GOLDMAN, ARCHITECT
2696 S COLORADO BLVD, SUITE 525
DENVER, CO 80222
(303) 962-9164

THESE DRAWINGS AND SPECIFICATIONS AS INSTRUMENTS OF SERVICE, ARE AND SHALL REMAIN THE PROPERTY OF 3 CONSULTING ENGINEERS. THE PROJECT FOR WHICH THEY ARE MADE IS EXECUTED AND PUBLISHED IN COPYRIGHT. ALL RIGHTS RESERVED. NOT BE USED BY ANY PERSON OR ENTITY ON OTHER PROJECTS EXCEPT BY AGREEMENT WITH 3 CONSULTING ENGINEERS. ANY REUSE WITHOUT WRITTEN VERIFICATION OR ADAPTATION BY 3 CONSULTING ENGINEERS FOR THE SPECIFIC PURPOSE INTENDED WILL BE AT USER'S SOLE RISK AND WITHOUT LIABILITY OR LEGAL EXPOSURE TO 3 CONSULTING ENGINEERS OR ITS AFFILIATES. Copyright © 2023

QUICK N CLEAN CAR WASH

PARKER RD. & PINE LANE AVE.

PARKER, CO 80134

2696 S COLORADO BLVD, SUITE 525
DENVER, CO 80222
(303) 962-9164
www.cshqa.com

CSHQA

PROJECT	DATE
20037	1-16-2023
DRAWN	CHECKED
JCB	JCB

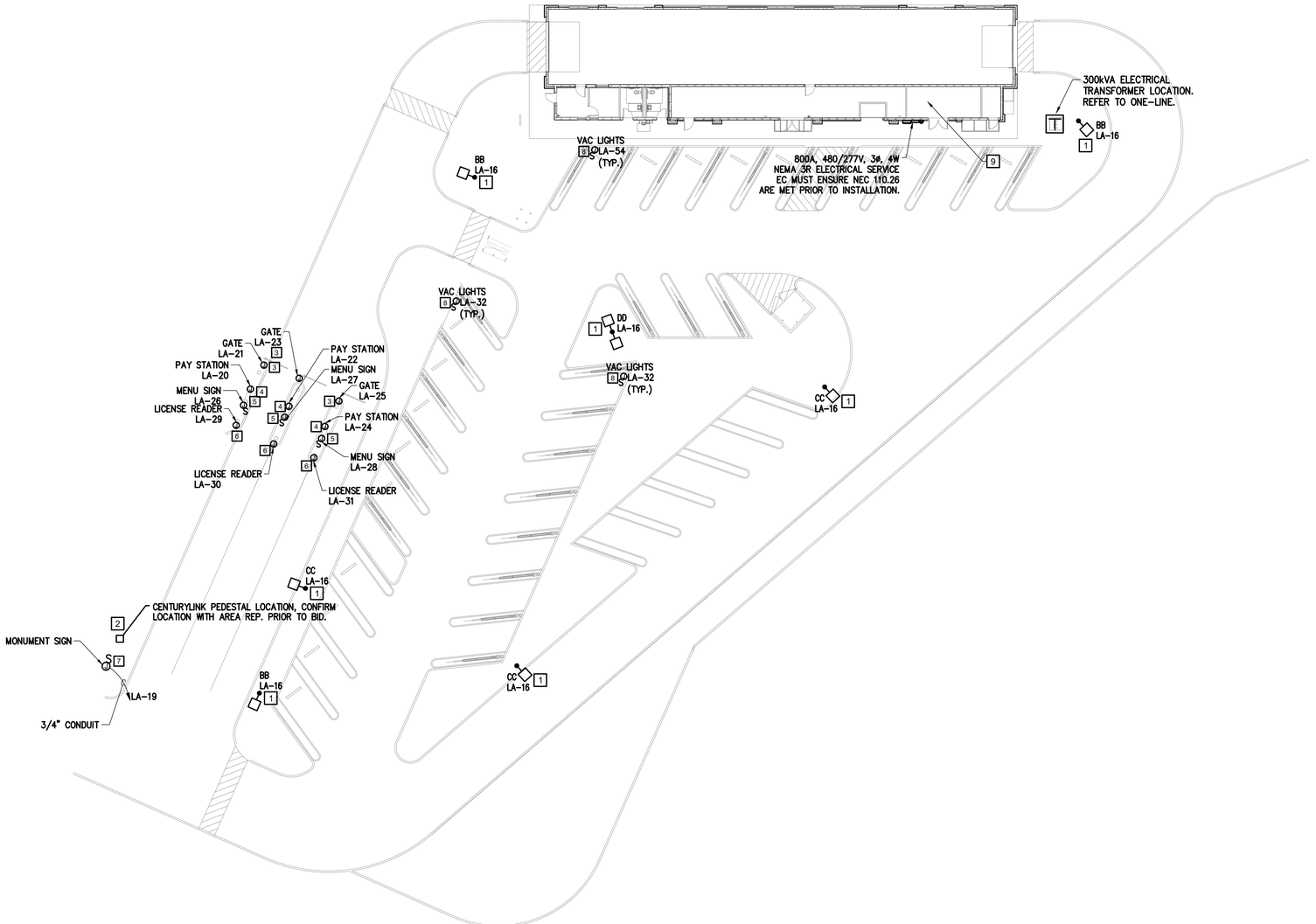
REVISED

SHEET TITLE

ELECTRICAL LEGEND & NOTES

SHEET

E0.2



1 ELECTRICAL SITE PLAN

1" = 20'-0"

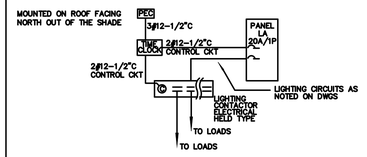
NOTES

1. FIXTURES TO BE CONTROLLED THROUGH TIME-CLOCK WITH A PHOTOCELL OVERRIDE.
2. EC TO PROVIDE (1) 4" PVC CONDUIT TO TELE-COM PEDESTAL FROM TBB. PROVIDE WITH RADIUS SWEEPS AND PULL-STRING. FIELD VERIFY LOCATION WITH LOCAL REP. PRIOR TO BID.
3. REFER TO P.O.S. GATE CONTROL DRAWINGS FOR ADDITIONAL UNDERGROUND CAR WASH CONDUIT ROUTING. EC IS RESPONSIBLE FOR LINE & LOW VOLTAGE UNDERGROUND.
4. P.S. #1, #2, AND #3- REFER TO MACNEIL & P.O.S. DRAWINGS FOR ADDITIONAL UNDERGROUND CAR WASH CONDUIT ROUTING. EC IS RESPONSIBLE FOR LINE & LOW VOLTAGE UNDERGROUND. (SEE MACNEIL DRAWINGS FOR FURTHER DETAIL)
5. PROVIDE SIGN LIGHTS AT P.S.#1, #2 & #3, SEE MACNEIL DRAWINGS FOR CONTROL DETAIL AND CONDUIT ROUTING.
6. LICENSE PLATE READERS – EC IS RESPONSIBLE FOR LINE VOLTAGE POWER & LOW VOLTAGE CONDUIT UNDERGROUND. VERIFY LOCATIONS WITH OWNER AND EQUIPMENT SUPPLIER.
7. PROVIDE 2#10,#10G IN 3/4"CONDUIT TO FOR MONUMENT SIGN. FIELD VERIFY LOCATION WITH THE OWNER PRIOR TO ROUGH-IN & INSTALLATION.
8. EC TO PROVIDE FUTURE DAISY CHAINED 3/4" CONDUITS FOR THE VACUUM LIGHTS.
9. CONFIRM VACUUM SYSTEM REQUIREMENTS PRIOR TO INSTALLATION. CONTRACTOR TO PROVIDE ALL UNDERGROUND WIRING TO CONTROL PANEL AND MOTOR. VERIFY VACUUM HP AND OCPD SIZE AT THIS LOCATION PRIOR TO GEAR ORDER.

NOTICE

1. EC TO REFER TO ALL CAR WASH DRAWINGS AND P.O.S. FOR ADDITIONAL UNDERGROUND CAR WASH CONDUIT ROUTING. EC IS RESPONSIBLE FOR LINE & LOW VOLTAGE UNDERGROUND. EC TO INCLUDE ALL UNDERGROUND IN PROPOSAL. EC IS RESPONSIBLE FOR ALL WORK ON THE MACNEIL CAR WASH DRAWINGS.
2. EC TO CONFIRM OCPD AND AMPERAGE FOR VACUUM SYSTEMS PRIOR TO INSTALLATION.

FURNISH AND INSTALL A MANUAL OVERRIDE SWITCH ON THE TIME CLOCK IF ONE IS NOT INTERNAL SUCH THAT WHEN THE MANUAL SWITCH IS TURNED ON THE LIGHTS WILL COME ON IMMEDIATELY TO ALLOW FOR LAMP MAINTENANCE.



**TIME CLOCK-----INTERMATIC #EJ2805C
DIGITAL 24 HOUR, SKIP A DAY, ASTRO DIAL
BATTERY PACK CARRYOVER
DPST, 120V, NEMA 1 ENCLOSURE

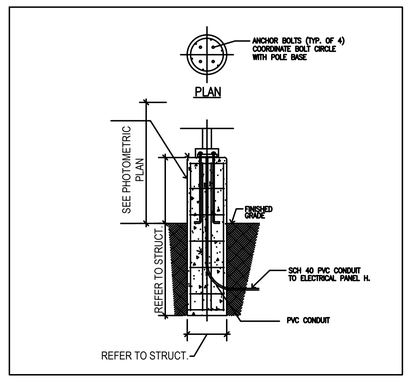
**PEC-----INTERMATIC #EEK4236S SERIES VOLTAGE AS DETERMINED BY CONTROL POWER AS NOTED ABOVE
MOUNTED ABOVE THE ROOF LINE AND PHOTO EYE TO FACE THE SOUTH DIRECTION

**LIGHTING CONTRACTOR-----"ASCO" #917 SERIES (MECH HELD, ELEC OPERATED) WITH (# OF POLES AS REQ'D)
NEMA 1 ENCLOSURE, 20A RATING ON CONTACTS AND COIL VOLTAGE AS DETERMINED ABOVE

**WHEN TIME CLOCK AND CONTACTORS ETC ARE LOCATED OUTSIDE, THE CONTRACTOR SHALL FURNISH AND INSTALL A NEMA 3R LOCKABLE, HINGED COVER J-BOX IN ORDER TO INSTALL THIS EQUIPMENT INSIDE OF TO AVOID THE WEATHER. ACTUAL SIZE SHALL BE DETERMINE BY THE CONTRACTOR DEPENDING ON THE EQUIPMENT BEING PLACED INSIDE OF THE ENCLOSURE. ALSO FURNISH AND INSTALL A 3/4" PLYWOOD BACKBOARD ON THE INSIDE OF THE J-BOX FOR MOUNTING ALL EQUIPMENT ON. PLYWOOD SHALL BE FULL SIZE. LABEL EXTERIOR OF ENCLOSURE "LIGHT CONTROL EQUIPMENT" WITH A PHENOLIC SCREW ON NAMEPLATE.

EXTERIOR LIGHT CONTROL

A EXTERIOR LIGHT CONTROL
N.T.S.



B LIGHT POLE BASE DETAIL TYPE: 'BB' 'CC' 'DD'
N.T.S.

COLORADO LICENSED
BRUCE PACHINGER
51373
PROFESSIONAL ENGINEER
2023-01-18

3 CONSULTING ENGINEERS

JESSE GOLDMAN, ARCHITECT
2696 S COLORADO BLVD, SUITE 525
DENVER, CO 80222
(303) 962-9164

THESE DRAWINGS AND SPECIFICATIONS AS INSTRUMENTS OF SERVICE, ARE AND SHALL REMAIN THE PROPERTY OF JESSE GOLDMAN, ARCHITECT. THE PROJECT FOR WHICH THEY ARE MADE IS EXECUTED AND PUBLISHED AS AN UNPUBLISHED WORK OF ARCHITECTURE. NOT BE USED BY ANY PERSON OR ENTITY ON OTHER PROJECTS EXCEPT BY AGREEMENT IN WRITING. COMPLETION OF THIS PROJECT WHEN PHASES WITHOUT PERMISSION FROM JESSE GOLDMAN, ARCHITECT AND ITS AFFILIATES. Copyright © 2023

QUICK N CLEAN CAR WASH

PARKER RD. & PINE LANE AVE.
PARKER, CO 80134

2696 S COLORADO BLVD, SUITE 525
DENVER, CO 80222
(303) 962-9164
www.cshqa.com

CSHQA

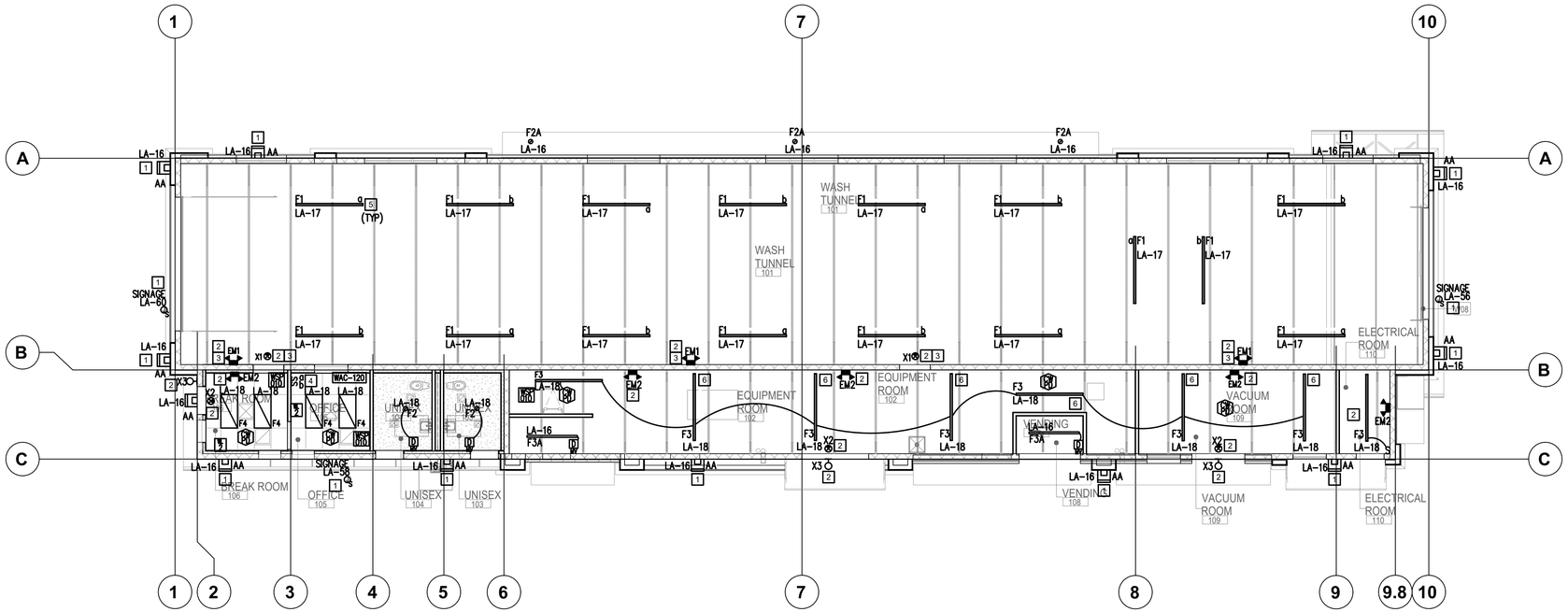
PROJECT	DATE
20037	1-16-2023
DRAWN	CHECKED
JCB	JCB

REVISED

SHEET TITLE
ELECTRICAL SITE PLAN

SHEET
E1.0

3 CONSULTING ENGINEERS
1415 Park Ave. W., Denver, CO 80205
p 303.357.1998
3consultingengineers.com



1 ELECTRICAL LIGHTING PLAN

3/16" = 1'-0"

ELECTRICAL GENERAL NOTES:

1.) SEE COVER SHEET FOR GENERAL NOTES AND LEGEND.

2.) ALL EXPOSED CONDUIT AND CABLE SHALL BE RAN PARALLEL & PERPENDICULAR TO THE BUILDING LINES; THERE SHALL BE NO EXPOSED CONDUIT IN THE TUNNEL.

3.) PAINT CONDUIT TO MATCH CEILINGS.

4.) COORDINATE THE EXACT LOCATIONS OF ALL EQUIPMENT WITH THE OWNERS PROJECT MANAGER AND INSTALL PER THE REQUIREMENTS OF THE RESPECTIVE EQUIPMENT SUPPLIER/INSTALLER

5.) EC TO INCORPORATE ALL CAR-WASH DRAWINGS INTO PROPOSAL. EC IS RESPONSIBLE FOR ALL COORDINATION OF ALL MACNEIL & P.O.S. DRAWINGS. THIS INCLUDES CONTROL WIRING.

6.) ALL WIRING IN THE TUNNEL SHALL BE WEATHERPROOF AND MEET 2020 NEC WIRING METHODS FOR THE APPLICATION.

ELECTRICAL PROJECT NOTES:

1.) THE WORK DEPICTED ON THE DRAWINGS IS DIAGRAMMATIC. COORDINATE WORK WITH OTHER TRADES SO INTERFERENCE AMONG CONDUITS, EQUIPMENT, DUCTS, PIPING, ARCHITECTURAL AND STRUCTURAL WORK WILL BE AVOIDED.

2.) UNLESS OTHERWISE NOTED, BRANCH CIRCUITS ARE #12 A.W.G.

3.) PROVIDE A #9 GA. GALVANIZED PULLWIRE OR PULL ROPE/CORD HAVING 200# TEST STRENGTH IN EACH EMPTY RACEWAY OVER 25 FEET LONG.

4.) PROVIDE GROUNDING IN ACCORDANCE WITH THE 2020 NATIONAL ELECTRICAL CODE NEC ART. 250.

5.) GENERAL BUILDING CONTRACTOR AND/OR HIS ELECTRICAL SUBCONTRACTOR SHALL BE RESPONSIBLE FOR THE INSTALLATION OF ALL FIRE ALARM SYSTEMS, SECURITY ALARM SYSTEMS, AND ENERGY MANAGEMENT SYSTEMS. THE ASSOCIATED CONTROL PANELS AND ESTABLISHMENT OF ALL MONITORING FOR THESE SYSTEMS MUST BE IN COMPLETE WORKING ORDER. ADVANCE TESTING, ADJUSTMENTS AND SECURING OF ALL APPROVALS BY LOCAL AND STATE BUILDING OFFICIALS AND FIRE MARSHALS MUST BE COMPLETED ONE (1) WEEK AFTER THE PROJECT HAS BEEN AWARDED.

6.) PROVIDE ALL BRANCH CIRCUIT WIRING RACEWAYS TO ALL FIXTURES, DEVICES AND EQUIPMENT TO CONNECT THEM TO THE CIRCUITS INDICATED.

ELECTRICAL KEYNOTES

1 EXTERIOR LIGHT FIXTURE TO BE CONTROLLED THROUGH TIME-CLOCK WITH A PHOTOCELL OVERRIDE.

2 CONNECT EGRESS LIGHT AHEAD OF LOCAL SWITCHING.

3 EC TO PROVIDE WEATHERPROOF EMERGENCY LIGHT FIXTURES IN THE WASH-BAY.

4 FIELD COORDINATE NEW SWITCHBANK & NEW SWITCHING PATTERN WITH THE OWNER.

5 EC TO CONCEAL ALL CONDUIT FOR THE F1 FIXTURES IN THE TUNNEL. (TYPICAL)

6 EC TO CONCEAL ALL CONDUIT FOR THE F3 FIXTURES IN THE EQUIPMENT ROOM. (TYPICAL)

LIGHTING CONTROL LEGEND:

D MV — ONW-D-1001-MV – LINE VOLTAGE DUAL TECHNOLOGY WALL SWITCH SENSOR, 1000 SQFT, GROUND REQUIRED.

CW PD — CWPD-1500 – WIRELESS, PASSIVE INFRARED TECHNOLOGY, 360 DEGREE CEILING SENSOR, 1500 SQFT.

WAC-120 — WAC-120 – WIRELESS AREA CONTROLLER. REQUIRES 120V CONNECTION.

WSP 010 — WSP-MV-010 – WIRELESS RELAY SWITCHPACK, 20A, 0-10V DIMMING.

W 2 — W2L – WAVELINX WALL STATION, 120V, 2-LARGE BUTTONS.

3 CONSULTING ENGINEERS
1415 Park Ave. W., Denver, CO 80205
p 303.357.1998
3consultingengineers.com

COLORADO LICENSED BRUCE PACHINGAT 51373 PROFESSIONAL ENGINEER
2023-01-18

3 CONSULTING ENGINEERS

JESSE GOLDMAN, ARCHITECT
2696 S COLORADO BLVD, SUITE 525
DENVER, CO 80222
(303) 962-9164

THESE DRAWINGS AND SPECIFICATIONS, AS INSTRUMENTS OF SERVICE, ARE AND SHALL REMAIN THE PROPERTY OF CSHQA AND THE ARCHITECT FOR THE PROJECT FOR WHICH THEY ARE MADE IS EXECUTED OR PUBLISHED. ALL REPRODUCTION, COPYING OR USE OF THEM IS NOT TO BE USED BY ANY PERSON OR ENTITY ON OTHER PROJECTS, FOR ADDITIONS TO THIS PROJECT, OR FOR COMPLETION OF THIS PROJECT WHEN PHASES WITHOUT THE WRITTEN CONSENT OF CSHQA, INC. OR ITS AFFILIATES. Copyright © 2023

QUICK N CLEAN CAR WASH
PARKER RD. & PINE LANE AVE.
PARKER, CO 80134

2696 S COLORADO BLVD, SUITE 525
DENVER, CO 80222
(303) 962-9164
www.cshqa.com

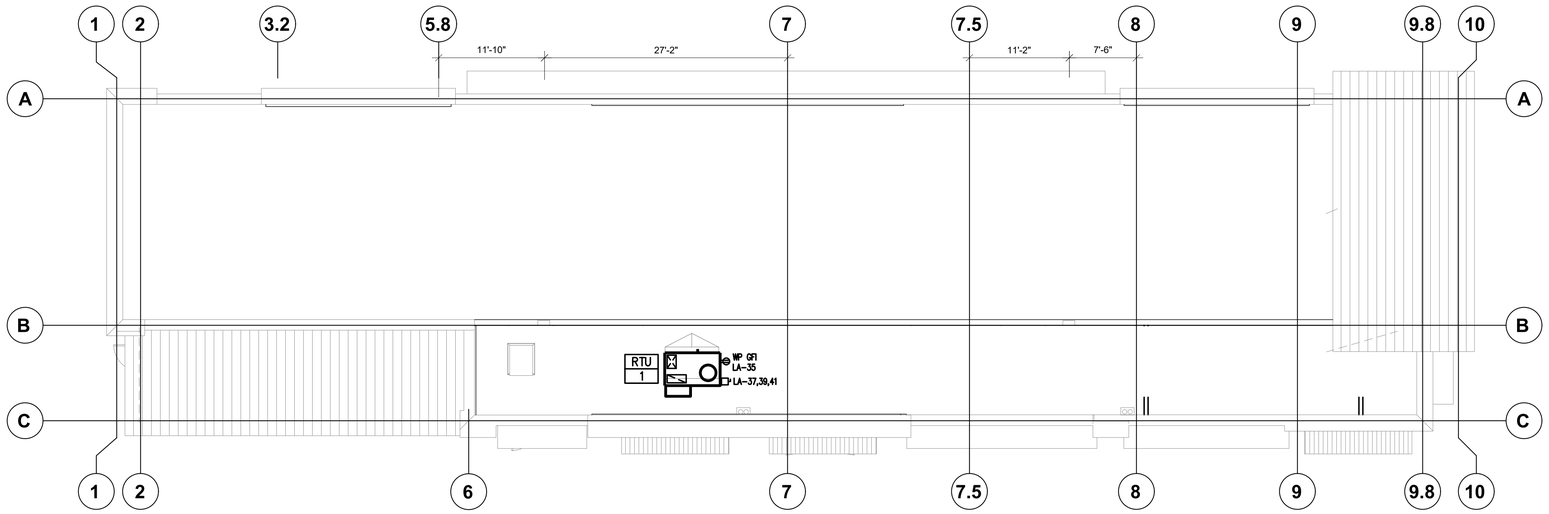
CSHQA

PROJECT	DATE
20037	1-16-2023
DRAWN	CHECKED
JCB	JCB

REVISED

SHEET TITLE
ELECTRICAL LIGHTING PLAN

SHEET
E1.1



1 ELECTRICAL ROOF PLAN
1/8" = 1'-0"

COLORADO LICENSED
BRUCE PACHINGER
513773
PROFESSIONAL ENGINEER
2023-01-18

3 CONSULTING ENGINEERS

JESSE GOLDMAN, ARCHITECT
2696 S COLORADO BLVD, SUITE 525
DENVER, CO 80222
(303) 962-9164

THESE DRAWINGS AND SPECIFICATIONS, AS INSTRUMENTS OF SERVICE, ARE AND SHALL REMAIN THE PROPERTY OF ARCHITECT. ALL REPRODUCTIONS OF THE PROJECT FOR WHICH THEY ARE MADE IS EXECUTED AND PUBLISHED AS THE WORK OF ARCHITECT. DRAWINGS ARE NOT BE USED BY ANY PERSON OR ENTITY ON OTHER PROJECTS, FOR ADDITIONS TO THIS PROJECT, OR FOR COMPLETION OF THIS PROJECT WHEN PHASES WITHOUT THE WRITTEN CONSENT OF ARCHITECT.
© COPYRIGHT CSHQA, INC. 2023
AFFILIATES. Copyright © 2023

QUICK N CLEAN CAR WASH

PARKER RD. & PINE LANE AVE.
PARKER, CO 80134

CSHQA

2696 S COLORADO BLVD, SUITE 525
DENVER, CO 80222
(303) 962-9164
www.cshqa.com

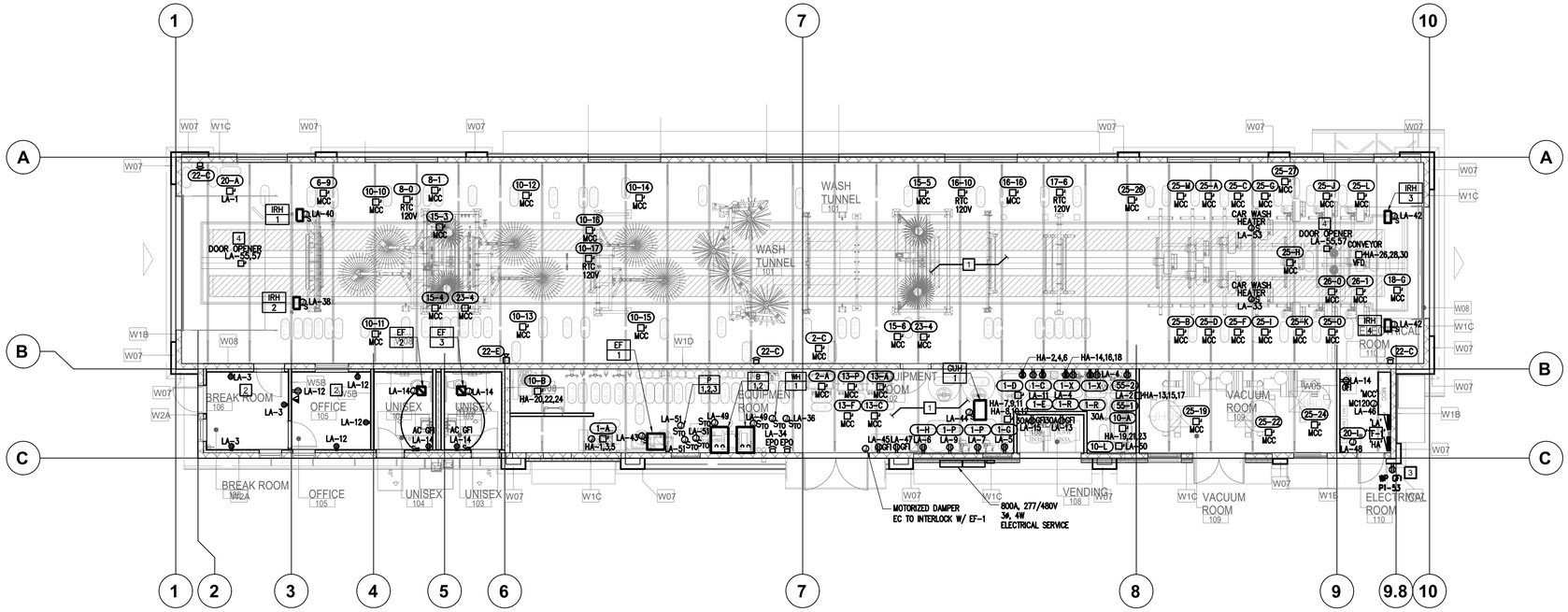
PROJECT	DATE
20037	1-16-2023
DRAWN	CHECKED
JCB	JCB

REVISED

SHEET TITLE
ELECTRICAL ROOF PLAN

SHEET
E1.2

3 CONSULTING ENGINEERS
1415 Park Ave. W., Denver, CO 80205
p 303.357.1998
3consultingengineers.com



1 ELECTRICAL POWER PLAN
1/8" = 1'-0"

ELECTRICAL KEYNOTES

1. REFER TO CAR WASH EQUIPMENT DRAWINGS FOR POWER IN THIS AREA.
2. VERIFY RECEPTACLE/DATA PORT LOCATIONS WITH OWNER/ARCHITECT BASED ON FURNITURE LAYOUT PRIOR TO INSTALLATION.
3. IRRIGATION CONTROLLER, FIELD VERIFY LOCATION PRIOR TO INSTALLATION.
4. EC TO VERIFY GARAGE DOOR AMPERAGE & VOLTAGE PRIOR TO ROUGH-IN & INSTALLATION.

GENERAL EQUIPMENT NOTES

1. ALL WIRING TO BE 2#12CU, #12CU GND-½"C UNLESS OTHERWISE NOTED
2. REFER TO MACNEIL CAR WASH DRAWINGS FOR EXACT LOCATIONS OF EQUIPMENT.
3. REFER TO ELECTRICAL-MECHANICAL SCHEDULE FOR WIRE SIZING OF EQUIPMENT.
4. ALL BRANCH CIRCUITING LOCATED IN WASH BAY SHALL BE IN ACCORDANCE WITH THE 2020 NATIONAL ELECTRICAL CODE. (NON-FERROUS)
5. ALL LOW VOLTAGE CONDUIT & WIRING IS THE RESPONSIBILITY OF THE EC. SEE MACNEIL & P.O.S. EQUIPMENT DRAWINGS FOR FURTHER DETAIL & ROUTING.

COLORADO LICENSED
BRUCE PACHINGAT
51373
PROFESSIONAL ENGINEER
2023-01-18

3 CONSULTING ENGINEERS

JESSE GOLDMAN, ARCHITECT
2696 S COLORADO BLVD, SUITE 525
DENVER, CO 80222
(303) 962-9164

THESE DRAWINGS AND SPECIFICATIONS, AS INSTRUMENTS OF SERVICE, ARE AND SHALL REMAIN THE PROPERTY OF THE ARCHITECT WHETHER THE WORKS FOR THE PROJECT FOR WHICH THEY ARE MADE IS EXECUTED OR NOT. THE DRAWINGS AND SPECIFICATIONS ARE NOT TO BE USED BY ANY PERSON OR ENTITY ON OTHER PROJECTS, FOR ADDITIONS TO THIS PROJECT OR FOR COMPLETION OF THIS PROJECT WHEN PHASES WITHOUT THE WRITTEN CONSENT OF THE ARCHITECT.
© COPYRIGHT 2023
3 CONSULTING ENGINEERS, INC. DBA 3C ATLANTIS

QUICK N CLEAN CAR WASH

PARKER, CO 80134

PARKER RD. & PINE LANE AVE.

2696 S COLORADO BLVD, SUITE 525
DENVER, CO 80222
(303) 962-9164
www.cshqa.com

CSHQA

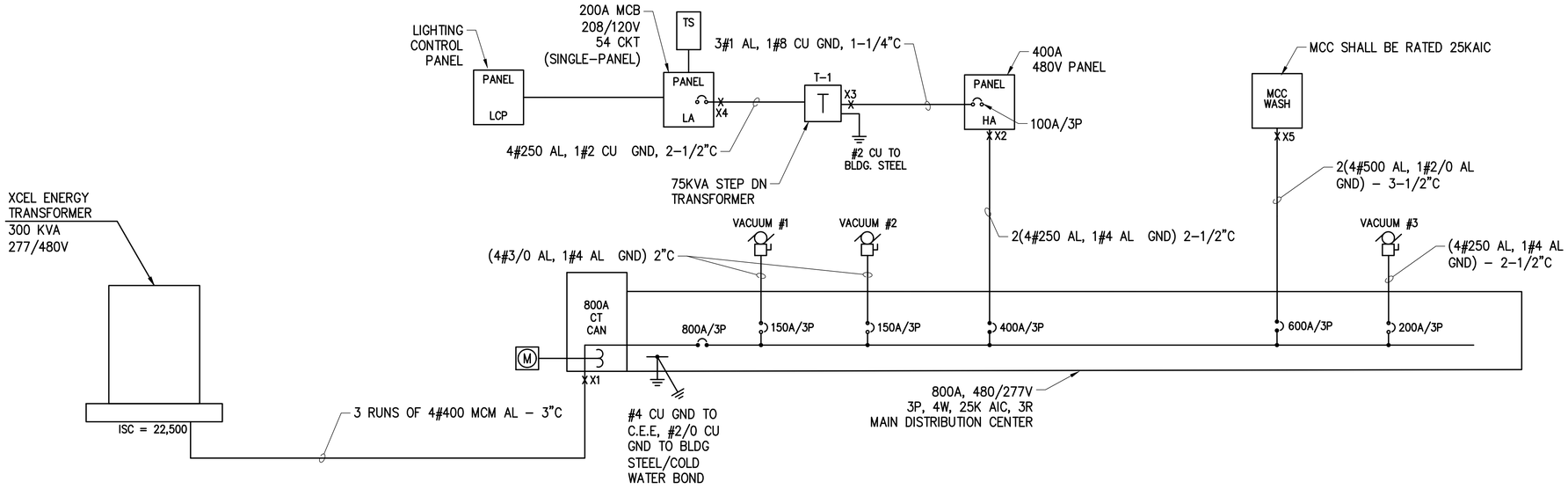
PROJECT	DATE
20037	1-16-2023
DRAWN	CHECKED
JCB	JCB

REVISED

SHEET TITLE
ELECTRICAL POWER PLAN

SHEET
E2.1

3 CONSULTING ENGINEERS
1415 Park Ave. W., Denver, CO 80205
p 303.357.1998
3consultingengineers.com



1 E3-1 **ELECTRICAL ONE-LINE DIAGRAM**
NTS

ELECTRICAL CODE NOTES

1. ALL SWITCHBOARDS AND PANELBOARDS SUPPLIED BY A FEEDER IN OTHER THAN ONE OR TWO FAMILY DWELLINGS SHALL BE MARKED TO INDICATE THE
2. PROVIDE ADEQUATE GUARDING OF ALL LIVE PARTS IN EXTERIOR YARD, SUCH AS A SUITABLE ENCLOSURE SO THAT ONLY QUALIFIED PERSONS HAVE ACCESS.
3. ELECTRICAL SWITCHBOARDS TO BE LABELED WITH REQUIRED ARC-FLASH HAZARD WARNING LABELS.
4. CONFIRM LOCAL UTILITY METERING STANDARD PRIOR TO BID & GEAR ORDER.
5. 240.87 ARC ENERGY REDUCTION. WHERE THE HIGHEST CONTINUOUS CURRENT TRIP SETTING FOR WHICH THE ACTUAL OVERCURRENT DEVICE INSTALLED IN A CIRCUIT BREAKER IS RATED OR CAN BE ADJUSTED IS 1200A OR HIGHER, 240.87(A) AND (B) SHALL APPLY.

FAULT CURRENT CALCULATIONS

X1	F=	1.73	X	66	X	22500	=	0.10					
		3	X	18506	X	480							
	M=	1					=	0.91	ISC=	22500	X	0.91	= **20522**
		1	+	0.10									
X2	F=	1.73	X	15	X	20522	=	0.05					
		2	X	12122	X	480							
	M=	1					=	0.96	ISC=	20522	X	0.96	= **19624**
		1	+	0.05									
X3	F=	1.73	X	10	X	19624	=	0.15					
		1	X	4645	X	480							
	M=	1					=	0.87	ISC=	19624	X	0.87	= **17030**
		1	+	0.15									
X4	F=	17030	X	480	X	3.4	=	3.71					
		1E+05	X	75	X	1							
	M=	1					=	0.21	ISC=	4735	X	0.21	= **1006**
		1	+	3.71									
X5	F=	1.73	X	20	X	20522	=	0.04					
		2	X	18756	X	480							
	M=	1					=	0.96	ISC=	20522	X	0.96	= **19743**

PANEL 'HA'

VOLTAGE L-L:	480	LOCATION:	ELECTRICAL ROOM
VOLTAGE L-G:	277	BUS RATING:	400 AMP
TYPE:	3PH/4W	MAIN CB:	M.L.O.
MOUNTING:	SURFACE	S.C. RATING:	25K AIC FULLY RATED
NOTES:		FED FROM:	MDP

CIR. NO	CCT TYPE	LOAD VA	LOAD DESCRIPTION	CIRCUIT BRKR POLE	CIRCUIT BRKR TRIP	BUS	CIRCUIT BRKR TRIP	CIRCUIT BRKR POLE	LOAD DESCRIPTION	LOAD VA	CCT TYPE	CIR NO
1	E	2105	(1-A) RECLAIM SYS	3	20	A	20	3	(1-D) R.O. FILTRATION SYS	942	E	2
3	E	2105	----			B			----	942	E	4
5	E	2105	----			C			----	942	E	6
7	M	942	(1-E) R.O. REPRESS. PUMP	3	20	A	20	3	(1-E) R.O. REPRESS. PUMP	942	M	8
9	M	942	----			B			----	942	M	10
11	M	942	----			C			----	942	M	12
13	M	1330	(55-1) FRESH WATER PUMI	3	20	A	20	3	(1-X) R.O.R. BOOSTER PUI	831	M	14
15	M	1330	----			B			----	831	M	16
17	M	1330	----			C			----	831	M	18
19	E	6842	(10-A) 20HP COMPRESSOR	3	40	A	20	3	(10-B) 10HP COMPRESSOR	3878	E	20
21	E	6842	----			B			----	3878	E	22
23	E	6842	----			C			----	3878	E	24
25			SPARE	3	20	A	60	3	(60-1) CONVEYOR	12188	M	26
27			----			B			-----	12188	M	28
29			----			C			-----	12188	M	30
31			SPARE	3	20	A	20	1	SPARE			32
33			----			B	20	1	SPARE			34
35			----			C	20	1	SPARE			36
37			SPARE	3	20	A	100	3	PANEL 'LA'	18372	S	38
39			----			B			-----	20167	S	40
41			----			C			-----	15908	S	42

CCT TYPE: L=LIGHTING, R=RECEPTACLE, M=MOTOR, LM=LARGEST MOTOR, E=EQUIPMENT, KE=KITCH EQUIP, S=SUBFEED PANEL

CCT TYPE:	LOAD	MULT	DEMANDED LOAD
LIGHTING:	0	1.25	0 VA
RECEPTACLE:	0	1.0	0 VA
OVER 10K:	0	0.5	0 VA
MOTOR:	48699	1.0	48699 VA
LGST MOTOR:	0	1.25	0 VA
EQUIPMENT:	41301	1.0	41301 VA
KITCH EQUIP:	0	0	0 VA
SUBFEED PNL:	54447	1.0	54447 VA

TOTAL CONNECTED LOADS

	A	B	C
VA	48372	50167	45908

TOTAL DEMANDED LOADS

	A	B	C
VA	48372	50167	45908
AMPS	175	181	166

TOTAL ON PANEL: 144 KVA, 174 AMPS

NOTES: INSTALL BREAKERS TO MATCH SCHEDULE.
PANEL SHALL BE RATED FOR A CORROSIVE ENVIRONMENT

PANEL 'LA'

VOLTAGE L-L:	208	LOCATION:	ELECTRICAL ROOM
VOLTAGE L-G:	120	BUS RATING:	225 AMP
TYPE:	3PH/4W	MAIN CB:	200A3P
MOUNTING:	SURFACE	S.C. RATING:	10K AIC FULLY RATED
NOTES:		FED FROM:	PANEL 'HA'

CIR. NO	CCT TYPE	LOAD VA	LOAD DESCRIPTION	CIRCUIT BRKR POLE	CIRCUIT BRKR TRIP	BUS	CIRCUIT BRKR TRIP	CIRCUIT BRKR POLE	LOAD DESCRIPTION	LOAD VA	CCT TYPE	CIR NO
1	E	288	(20-A) ENT EYES	1	20	A	20	1	(55-2) FRESH WATER TANK	60	E	2
3	R	540	BREAL ROOM RECEPS	1	20	B	20	1	(1-R) R.O.R. BOOSTER PUI	288	M	4
5	E	48	(1-G) SOFT WATER SYS	1	20	C	20	1	(1-H) SOFT WATER SYS	48	E	6
7	E	72	(1-P) WATER SOFTNER	1	20	A	20	1	PULSATRON (51-1 & 51-2)	440	E	8
9	E	72	(1-P) WATER SOFTNER	1	20	B	20	1	SUPERSAT (52-1)	1750	E	10
11	E	180	(1-C) R.O.PUMP CONTROL	1	20	C	20	1	LOBBY/STORAGE REC	720	R	12
13	R	1200	VENDING MACHINE	1	30	A	20	1	RESTROOM	180	R	14
15	E	2000	MAT WASHER GFI	1	30	B	20	1	POLE LTG	424	L	16
17	L	804	TUNNEL LTG	1	20	C	20	1	LOBBY & EQ. ROOM LTG	1360	L	18
19	L	1200	MONUMENT SIGN	1	20	A	20	1	PAY STATION	500	E	20
21	M	400	GATE	1	20	B	20	1	PAY STATION	500	E	22
23	M	400	GATE	1	20	C	20	1	PAY STATION	500	E	24
25	M	400	GATE	1	20	A	20	1	MENU SIGN	1200	L	26
27	L	1200	MENU SIGN	1	20	B	20	1	MENU SIGN	1200	L	28
29	E	250	LICENSE READER	1	20	C	20	1	LICENSE READER	250	E	30
31	E	250	LICENSE READER	1	20	A	20	1	VAC LIGHTS	1200	L	32
33	E	750	CAR WASH HEATER	1	20	B	20	1	WH-1	1440	E	34
35	R	180	MAINT. RECEPT	1	20	C	20	1	HCP-1	101	E	36
37	LM	2520	RTU-1	3	30	A	20	1	IRH-1	576	E	38
39	LM	2520	----			B	20	1	IRH-2	576	E	40
41	LM	2520	----			C	20	1	IRH-3	576	E	42
43	M	992	EF-1, EF-2	1	20	A	20	1	GUH-1 & IRH-4	864	E	44
45	E	1250	WASHER	1	20	B	20	1	MC120	240	E	46
47	E	1250	WASHER	1	20	C	20	1	(20-1) TUNNEL CONT	1500	E	48
49	M	500	B-1	1	20	A	20	1	(10-L) AIR DRYER	1500	E	50
51	M	500	P-1 & P-2	1	20	B	20	1	(1-A) RECLAIM CONT.	400	E	52
53	E	750	CAR WASH HEATER	1	20	C	20	1	VAC LIGHTS	1440	L	54
55	M	1400	DOOR OPENER	2	20	A	20	1	SIGNAGE	1200	L	56
57	M	1400	-----			B	20	1	SIGNAGE	1200	L	58
59	L	432	EXTERIOR LIGHTING	1	20	C	20	1	SIGNAGE	1200	L	60

CCT TYPE: L=LIGHTING, R=RECEPTACLE, M=MOTOR, LM=LARGEST MOTOR, E=EQUIPMENT, KE=KITCH EQUIP, S=SUBFEED PANEL

CCT TYPE:	LOAD	MULT	DEMANDED LOAD
LIGHTING:	14060	1.25	17575 VA
RECEPTACLE:	2820	1.0	2820 VA
OVER 10K:	0	0.5	0 VA
MOTOR:	6280	1.0	6280 VA
LGST MOTOR:	7560	1.25	9450 VA
EQUIPMENT:	18981	1.0	18981 VA
KITCH EQUIP:	0	0	0 VA
SUBFEED PNL:	0	1.0	0 VA

TOTAL CONNECTED LOADS

	A	B	C
VA	16542	18650	14509

TOTAL DEMANDED LOADS

	A	B	C
VA	18372	20286	16448
AMPS	153	169	137

TOTAL ON PANEL: 55 KVA, 153 AMPS

NOTES:
PANEL SHALL BE RATED FOR A CORROSIVE ENVIRONMENT

3 CONSULTING ENGINEERS
1415 Park Ave. W., Denver, CO 80205
p 303.357.1998
3consultingengineers.com

COLORADO LICENSED BRUCE PACHINGER 51373 PROFESSIONAL ENGINEER
2023-01-18

3 CONSULTING ENGINEERS

JESSE GOLDMAN, ARCHITECT
2696 S COLORADO BLVD, SUITE 525
DENVER, CO 80222
(303) 962-9164

THESE DRAWINGS AND SPECIFICATIONS, AS INSTRUMENTS OF SERVICE, ARE AND SHALL REMAIN THE PROPERTY OF ARCHITECT AND THE ARCHITECT'S CONSULTANTS. THE PROJECT FOR WHICH THEY ARE MADE IS EXECUTED AND THE PUBLICATION THEREOF IS RESTRICTED. THEY SHALL NOT BE USED BY ANY PERSON OR ENTITY ON OTHER PROJECTS, FOR ADDITIONS TO THIS PROJECT, OR FOR COMPLETION OF THIS PROJECT WHEN PHASES WITHOUT THE WRITTEN CONSENT OF ARCHITECT.
ALL RIGHTS RESERVED © COPYRIGHT CSHQA, INC. 1975-2019
ARCHITECTURE | PLANNING | INTERIORS | GRAPHICS
Copyright © 2023

QUICK N CLEAN CAR WASH

PARKER RD. & PINE LANE AVE.
PARKER, CO 80134

2696 S COLORADO BLVD, SUITE 525
DENVER, CO 80222
(303) 962-9164
www.cshqa.com

CSHQA

PROJECT	DATE
20037	1-16-2023
DRAWN	CHECKED
JCB	JCB

REVISED

SHEET TITLE
ELECTRICAL ONE-LINE & SCHEDULES

SHEET
E3.1

INTERIOR LIGHTING COMCHECK

COMcheck Software Version COMcheckWeb

Interior Lighting Compliance Certificate

Project Information

Energy Code: 2021 IECC
Project Title: Cobblestone Car Wash
Project Type: New Construction

Construction Site: Owner/Agent: Designer/Contractor:

Additional Efficiency Package(s)

Credits: 10.0 Required 0.0 Proposed

Allowed Interior Lighting Power

A Area Category	B Floor Area (ft2)	C Allowed Watts / ft2	D Allowed Watts
1-Automotive Facility	5343	0.75	4007
		Total Allowed Watts =	4007

Proposed Interior Lighting Power

A Fixture ID : Description / Lamp / Wattage Per Lamp / Ballast	B Lamps/ Fixture	C # of Fixture	D Fixture Watt.	E (C X D)
1-Automotive Facility				
LED: F1: Other:	1	16	67	1072
LED: F2: LED Panel 19W:	1	2	21	42
LED: F3: LED Panel 80W:	1	8	94	752
LED: F3A: LED Panel 55W:	1	2	30	60
LED: F4: LED Panel 33W:	1	4	29	116
			Total Proposed Watts =	2042

Interior Lighting PASSES: Design 49% better than code

Interior Lighting Compliance Statement

Compliance Statement: The proposed interior lighting design represented in this document is consistent with the building plans, specifications, and other calculations submitted with this permit application. The proposed interior lighting systems have been designed to meet the 2021 IECC requirements in *COMcheck* Version COMcheckWeb and to comply with any applicable mandatory requirements listed in the Inspection Checklist.

CHAD SMITH, PRINCIPAL — Name - Title
CHAD SMITH — Signature
1/12/2023 — Date

EXTERIOR LIGHTING COMCHECK

COMcheck Software Version COMcheckWeb

Exterior Lighting Compliance Certificate

Project Information

Energy Code: 2021 IECC
Project Title: Cobblestone Car Wash
Project Type: New Construction
Exterior Lighting Zone: 4 (High activity metropolitan commercial district (LZ4))

Construction Site: Owner/Agent: Designer/Contractor:

Allowed Exterior Lighting Power

A Area/Surface Category	B Quantity	C Allowed Watts /	D Tradable Wattage	E Allowed Watts (B X C)
Parking area	28544 ft2	0.08	Yes	2284
			Total Tradable Watts (a) =	2284
			Total Allowed Watts =	2284
			Total Allowed Supplemental Watts (b) =	900

(a) Wattage tradeoffs are only allowed between tradable areas/surfaces.
(b) A supplemental allowance equal to 900 watts may be applied toward compliance of both non-tradable and tradable areas/surfaces.

Proposed Exterior Lighting Power

A Fixture ID : Description / Lamp / Wattage Per Lamp / Ballast	B Lamps/ Fixture	C # of Fixture	D Fixture Watt.	E (C X D)
Parking area (28544 ft2): Tradable Wattage				
LED: AA: LED Panel 19W:	1	12	25	305
LED: BB: LED Panel 55W:	1	3	59	177
LED: CC: LED Panel 55W:	1	3	59	177
LED: DD: LED Panel 60W:	1	1	118	118
LED: F2A: LED Panel 19W:	1	3	21	64
			Total Tradable Proposed Watts =	840

Exterior Lighting PASSES: Design 74% better than code

Exterior Lighting Compliance Statement

Compliance Statement: The proposed exterior lighting design represented in this document is consistent with the building plans, specifications, and other calculations submitted with this permit application. The proposed exterior lighting systems have been designed to meet the 2021 IECC requirements in *COMcheck* Version COMcheckWeb and to comply with any applicable mandatory requirements listed in the Inspection Checklist.

CHAD SMITH, PRINCIPAL — Name - Title
CHAD SMITH — Signature
1/12/2023 — Date

LUMINAIRE SCHEDULE

DESIGNATION	DESCRIPTION	LAMPS QTY.	LAMPS TYPE	VOLTAGE	TOTAL VA	MANUFACTURER DESIGN BASIS NAME	MANUFACTURER DESIGN BASIS CATALOG SERIES	MANUFACTURER OTHERS	MOUNTING TYPE	MOUNTING DEPTH	REMARKS
F1	8' WET RATED LED STRIP LIGHT		LED	120	67	LUMENWERX	VIAWETS TMG HLO LED 80 750 35 8 UNV D1 1 GSM EF W				
F2	LED RECESSED DOWNLIGHT		LED	UNV	21.2	PORTFOLIO	LD6B-20-D010-EUIB-1020-80-35-6LB-W-0-LI				
F2A	LED ENCLOSED RECESSED DOWNLIGHT		LED	UNV	21.2	METEOR	DOT 3.5 25 408 UNV STV 55 BLK BLK SUM				
F3	8' LED STRIP LIGHT		LED	UNV	94	LUMENWERX	VIA2S HLO FH LED 80 500 35 8 120 D1 DRC XX				
F3A	6' LED STRIP LIGHT		LED	UNV	30	LUMENWERX	VIA2S HLO FH LED 80 500 35 6 120 D1 DRC XX				
F4	2'X4' LENSED LED TROFFER		LED	120	29	METALUX	24GRLED1324X2RT				
X1	WP EXIT SIGN		LED	UNV	3.0	SURE-LITES	APX7G				WEATHERPROOF ENCLOSURE
X2	EXIT SIGN		LED	UNV	3.0	SURE-LITES	APX7G				
X3	EXTERIOR EM LIGHT		LED	UNV	3.0	SURE-LITES	SEL 25				
EM1	WP EMERGENCY LIGHT		LED	UNV	3.2	SURE-LITES	APEL				WEATHERPROOF ENCLOSURE
EM2	EMERGENCY LIGHT		LED	UNV	3.2	SURE-LITES	APEL				
AA	EXTERIOR WALL PACK		LED	UNV	25.4	MCGRAW-EDISON	IST-SA1B-740-U-T4FT				
BB	EXTERIOR POLE LIGHT		LED	UNV	59.0	MCGRAW-EDISON	GLEON-SA1C-740-U-T3				
CC	EXTERIOR POLE LIGHT		LED	UNV	59.0	MCGRAW-EDISON	GLEON-SA1C-740-U-T2				
DD	DOUBLE HEAD EXTERIOR POLE LIGHT		LED	UNV	118	MCGRAW-EDISON	GLEON-SA1C-740-U-T4FT (DOUBLE-HEAD)				

3 CONSULTING ENGINEERS
1415 Park Ave. W., Denver, CO 80205
p 303.357.1998
3consultingengineers.com

COLORADO LICENSED
BRUCE PACHINGER
51373
PROFESSIONAL ENGINEER
2023-01-18

3 CONSULTING ENGINEERS

JESSE GOLDMAN, ARCHITECT
2696 S COLORADO BLVD, SUITE 525
DENVER, CO 80222
(303) 962-9164

THESE DRAWINGS AND SPECIFICATIONS AS INSTRUMENTS OF SERVICE, ARE AND SHALL REMAIN THE PROPERTY OF CSHQA AND THE ARCHITECTURAL WORK THE PROJECT FOR WHICH THEY ARE MADE IS EXECUTED NOT BE USED BY ANY PERSON OR ENTITY ON OTHER PROJECTS, FOR ADDITIONS TO THIS PROJECT, OR FOR COMPLETION OF THIS PROJECT WHEN PHASES WITHOUT THE WRITTEN CONSENT OF CSHQA. © COPYRIGHT CSHQA, INC. 2023
AFFILIATES. Copyright © 2023

QUICK N CLEAN CAR WASH

PARKER RD. & PINE LANE AVE.
PARKER, CO 80134

2696 S COLORADO BLVD, SUITE 525
DENVER, CO 80222
(303) 962-9164
www.cshqa.com

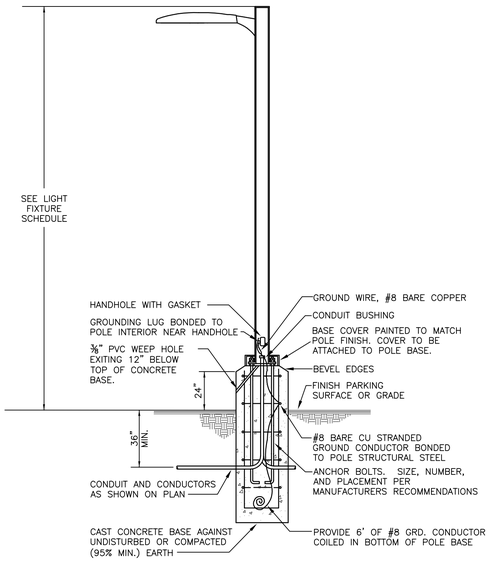
CSHQA

PROJECT	DATE
20037	1-16-2023
DRAWN	CHECKED
JCB	JCB

REVISED

SHEET TITLE
ELECTRICAL FIXTURE SCH. & CCK

SHEET
E3.2



NOTE:
DIAMETER & DEPTH OF CONCRETE BASE TO BE DETERMINED ON A REGIONAL BASES. STRUCTURAL ENGINEER SHALL SIZE REBAR AND CONCRETE BASED ON REGIONAL WEATHER AND SOILS CONDITIONS.

NOTE:
CONTRACTOR TO INSTALL NON-SHRINK MOTAR GROUT BETWEEN POLE BASE PLATE AND CONCRETE FOUNDATION AS REQUIRED AND SPECIFIED BY POLE MANUFACTURER.

02 POLE BASE DETAIL
NTS



01 PHOTOMETRIC SITE PLAN
1/16"=1'-0"

NORTH
PLAN

LIGHTING CALCULATION SUMMARY

AREA	AVERAGE	MAX	MIN	AVG/MIN	MAX/MIN
PARKING LOT	1.7	3.9	0.5	3.4:1	7.8:1
PROPERTY LINE	0.3	1	0.0	NA	NA
SITE	2.0	11.7	0.0	NA	NA

LIGHTING FIXTURE SCHEDULE

TYPE	DESCRIPTION	MANUFACTURER & CATALOG NUMBER	LAMPS & BALLAST	MOUNTING	VOLTS	WATTS	REMARKS
P4	SITE POLE	DSXO LED P4 40K T3M MVOLT / SSS 20' W/2' BASE	LED 10256 LUMENS	POLE MOUNT	277	92	
B	EXTERIOR DECORATIVE WALL MOUNT	ANP LIGHTING W520 M021LD D W 40K	LED 750 LUMENS	WALL MOUNT	277	41	
B1	EXTERIOR DECORATIVE WALL MOUNT	ANP LIGHTING W520 M009LD D W 40K	LED 850 LUMENS	WALL MOUNT	277	10	
W3	WIDE DITRIBUTION WALL LIGHT	LITHONIA DSXW1-LED-10C-350-40K-T2S	LED 1520 LUMENS	SURFACE	277	13.3	
L1	WET LOCATION LED STRIP	G&G LED: WPX2-SO-40K	LED 1900 LUMENS	SURFACE	277	15	
H	6" DOWNLIGHT	HUBBELL: LC6SL-6LCSL-18L-40K-8	LED 1800 LUMENS	RECESSED	277	23	

THIS SHEET IS PART OF THE CONSTRUCTION DOCUMENTS, OTHER SHEETS INCLUDING SPECIFICATIONS APPLY. THAT SHOWN HEREON IS SCHEMATIC IN NATURE AND NOT TO BE USED AS A SHOP DRAWING; THEREFORE, INCLUDE ALL MODIFICATIONS REQUIRED TO CONFORM TO SITE CONDITIONS AND THE EQUIPMENT AND MATERIAL USED. VERIFY LOCATIONS AND DIMENSIONS OF ALL ARCHITECTURAL AND STRUCTURAL ELEMENTS AS SHOWN ON THEIR RESPECTIVE DOCUMENTS, THESE ELEMENTS ARE SHOWN FOR REFERENCE AND SHALL BE VERIFIED PRIOR TO CONSTRUCTION AND THE ENGINEER ASSUMES NO LIABILITY FOR THE ACCURACY OF THESE ELEMENTS. NO DESIGN RESPONSIBILITY IS ASSUMED FOR ANY PORTION OF THE WORK THAT THE PROFESSIONAL ENGINEER HAS NOT SIGNED AND SEALED PER STATE/PROVINCE REQUIREMENTS.

Dialectic

Dialectic Inc.
310 W 20th Street, Suite 200
Kansas City, MO 64108

T 816-997-9601
F 816-997-9602
DialecticEng.com

Copyright 2020

PRELIMINARY
NOT FOR
CONSTRUCTION

JESSI GOLDMAN, ARCHITECT
2696 S. COLORADO BLVD., STE 525
DENVER, CO 80222
(303) 962-9164

THESE DRAWINGS AND SPECIFICATIONS, AS INSTRUMENTS OF SERVICE, ARE AND SHALL REMAIN THE PROPERTY OF JESSI GOLDMAN, ARCHITECT WHETHER THE PROJECT FOR WHICH THEY ARE MADE IS EXECUTED OR NOT. THE DRAWINGS AND SPECIFICATIONS ARE NOT TO BE USED BY ANY PERSON OR ENTITY ON OTHER PROJECTS, FOR ADDITIONS TO THIS PROJECT OR FOR COMPLETION OF THIS PROJECT WHEN PHASED WITHOUT THE WRITTEN CONSENT OF JESSI GOLDMAN, ARCHITECT.
Copyright © 2020

PARKER, CO
2696 S. COLORADO BLVD., STE 525
DENVER, CO 80222
(303) 962-9164
www.cshqa.com

QNC CAR WASH
PARKER AND PINE

D:\Users\Parker\Desktop\20037_R_AAD_Parker+RB.Lee+Inn+QNC+CAR+WASH.rvt

REVIEW SET
ONLY. NOT FOR
CONSTRUCTION

PROJECT	DATE
20037	08-19-2020
DRAWN	CHECKED
AAD	EKZ

REVISED
1-CITY COMMENTS 05/13/21
2-OWNER UPDATE 05/02/22
3-CITY COMMENTS 10/20/22

SHEET TITLE
PHOTOMETRIC SITE PLAN

SHEET
ES1.0

ORIGINAL SHEET SIZE
24" x 36"