UTILITY PLANS
MCDONALD'S PARKER-STROH

PARKER POINTE SUBDIVISION, FILING NO. 1, LOT 7
SWC S PARKER AND STROH ROAD
PARKER, CO

SHEET INDEX	
SHEET NUMBER	SHEET TITLE
PWSD	
C2.0	COVER SHEET
C2.1	NOTES
C2.2	UTILITY PLAN
C2.3	PWSD DETAILS
C2.4	PWSD DETAILS

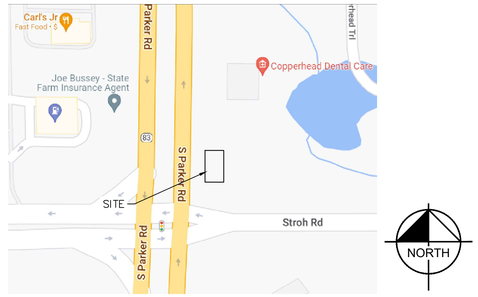

VICINITY MAP

BENCHMARK

BENCHMARK: NGS DESIGNATION C 355 (PID:KK0205): STANDARD NGS BM LOCATED 2 MI SE FROM SEDALIA, 2.0 MILES SOUTHEAST ALONG THE DENVER AND RIO GRANDE WESTERN RAILROAD FROM THE STATION AT SEDALIA, 0.5 MILE NORTHWEST OF MILEPOST 27, 32 FEET NORTH OF THE NORTH RAIL, 53 FEET SOUTH OF THE CENTER LINE OF U.S. HIGHWAY 85, 2 FEET WEST OF A WITNESS POST, SET IN THE TOP OF A CONCRETE POST WHICH PROJECTS 0.4 FOOT ABOVE THE GROUND.

BASIS OF BEARINGS

BEARINGS ARE BASED ON THE SOUTH LINE OF THE SE 1/4 OF SECTION 29, T.6S., R.66W., OF THE 6TH P.M. BEARING S89°35'27"W AND BOUNDED BY A 3 1/4" ALUMINUM CAP AT THE S 1/4 CORNER OF SECTION 29 AND A 3 1/4" ALUMINUM CAP AT THE SE CORNER OF SECTION 29. THE MONUMENTS ARE STAMPED AS SHOWN HEREON.

LEGAL DESCRIPTION

LOT 3, DOUGLAS 234, FILING NO. 6 WITHIN A PORTION OF THE SOUTHEAST 1/4 OF THE SECTION 29, TOWNSHIP 6 SOUTH, RANGE 66 WEST OF THE 6TH P.M. TOWN OF PARKER, COUNTY OF DOUGLAS, STATE OF COLORADO

DISTRICT ACCEPTANCE NOTE

1. UPON COMPLETION OF SANITARY AND WATER CONSTRUCTION AND TESTING, THE DEVELOPER OR CONTRACTOR SHALL CONTACT THE DISTRICT FOR PROBATIONARY ACCEPTANCE INSPECTION. A PUNCHLIST WILL BE PROVIDED FOR THE DEVELOPER AND CONTRACTOR UPON COMPLETION OF THE INITIAL WALK–THRU AND PROBATIONARY ACCEPTANCE WILL BE ISSUED FOLLOWING COMPLETION AND ACCEPTANCE OF THE WORK OUTLINED IN THE PUNCHLIST.
2. THE CONTRACTOR WILL BE HELD RESPONSIBLE FOR THE PROPER FUNCTIONING OF THE LINES FOR UP TO TWO (2) YEARS FROM THE DATE OF PROBATIONARY ACCEPTANCE OF THE LINES BY THE DISTRICT. ANY MALFUNCTION DURING THIS PERIOD OF GUARANTEE SHALL BE REMEDIED BY THE CONTRACTOR TO THE SATISFACTION OF THE DISTRICT ENGINEER AT NO EXPENSE TO THE DISTRICT.
3. THE DATE OF FINAL ACCEPTANCE WILL BE INDICATED IN THE CONDITION OF THE RESPONSIBLE FOR CONTACTING THE DISTRICT FOR FINAL INSPECTION AND FINAL ACCEPTANCE.

MATERIAL LIST

DESCRIPTION	QTY.	UNIT
1.5" TYPE K CU	260	LF
4" PVC	481	LF
1.5" DOMESTIC WATER METER	1	EA
3/4" IRRIGATION WATER METER	1	EA
4" 45° BEND	5	EA
3/4" CURB STOP	1	EA
1.5" CURB STOP	1	EA
8" GATE VALVE	2	EA
TEE	1	EA
HYDRANT	1	EA
CLEANOUT	3	EA
GREASE INTERCEPTOR	1	EA
SAMPLING MANHOLE	1	EA

PROJECT CONTACTS:

DEVELOPER:
MCDONALD'S USA, LLC
4643 S. ULSTER STREET, SUITE 1300
DENVER, CO 80237
TEL: (303) 519–4001
CONTACT: KORTNEY PEDIGO

ARCHITECT:
ARRIS ENGINERRING
5501 N 17TH STREET
OZARK, MO 65721
TEL: (417) 581–5125
CONTACT: COREY STINAR

ENGINEER
KIMLEY–HORN AND ASSOCIATES, INC.
2 NEVADA NORTH AVE., SUITE 300
COLORADO SPRINGS, CO 80903
TEL: (719) 453–0180
CONTACT: JESSICA MCCALLUM, P.E.

SURVEYOR:
ENGINEERING SERVICE CO.
14190 EAST EVANS AVENUE
AURORA CO, 80014
TEL: (719) 582–1270
CONTACT: CHIP BECKSTROM, P.L.S.

LANDSCAPE ARCHITECT
KIMLEY–HORN AND ASSOCIATES, INC.
2 NEVADA NORTH AVE., SUITE 300
COLORADO SPRINGS, CO 80903
TEL: (719) 453–0180
CONTACT: JEREMY POWELL, P.L.A.

MUNICIPAL CONTACT LIST:

TOWN OF PARKER

PLANNING AND INSPECTIONS DEPARTMENT
PLANNING DIVISION
20120 E MAINSTREET
PARKER, CO 80138
TEL: (303) 805–3338
CONTACT: BRIEANNA SIMON

CAPITAL IMPROVEMENT PROJECTS/ ENGINEERING DEPARTMENT
20120 E MAINSTREET
PARKER, CO 80138
TEL: (303) 940–9546
CONTACT: TYLER SANDT

CITY FIRE DEPARTMENT
20120 E MAINSTREET
PARKER, CO 80138
TEL: (303) 805–3169
CONTACT: RANDY CAPRA

GAS COMPANY
XCEL ENERGY
1800 LARIMER STREET
DENVER, CO 80202
TEL: (800) 895–1999
CONTACT: RON JOHNSON

PLANNING AND INSPECTIONS DEPARTMENT–INSPECTIONS DIVISION
20120 E MAINSTREET
PARKER, CO 80138
TEL: TBD
CONTACT: TBD

TRANSPORTATION DEPARTMENT
COLORADO DEPARTMENT OF TRANSPORTATION
TEL: (303) 757–9356
CONTACT: RICK SOLOMON

PARKER WATER AND SANITATION DISTRICT
18100 E WOODMAN DRIVE
PARKER, CO 80134
TEL: (303) 841–4627
CONTACT: DRAYTON SANDERSON

ELECTRIC COMPANY
IREA
5496 US HWY 85
SEDALIA, CO 80135
TEL: (720) 733–5493
CONTACT: BROOKS KAUFMAN

TELEPHONE COMPANY
CENTURY LINK
1801 CALIFORNIA STREET, SUITE 240
DENVER, CO 80202
TEL: (855) 891–4083
CONTACT: IZZY MILLER

FIRE CODE REVIEW BLOCK:

ALL FIRE HYDRANTS SHALL BE INSTALLED ACCORDING TO WATER UTILITY STANDARDS. THE NUMBER AND LOCATIONS OF THE FIRE HYDRANTS AS SHOWN ON THE OVERALL UTILITY PLAN ARE CORRECT AS SPECIFIED BY THE TOWN OF PARKER, COMMUNITY DEVELOPMENT DEPARTMENT.

FIRE CODE OFFICIAL OR DESIGNATED REPRESENTATIVE DATE

(NOTE – UNDERGROUND FIRE LINE (UFL) SUBMITTAL DOCUMENTS MUCH MEET THE REQUIREMENTS OF NFPA 24 WHEN SUBMITTING FOR REVIEW.)

THE DISTRICT INSPECTOR MUST BE NOTIFIED AT LEAST 48 HOURS PRIOR TO START OF CONSTRUCTION. CALL PARKER WATER AND SANITATION DISTRICT AT 303–841–4627. THE DISTRICT WILL PROVIDE PERIODIC INSPECTIONS OF THE WORK. 24 HOUR NOTICE TO THE INSPECTOR IS REQUIRED FOR SCHEDULING INSPECTIONS.
ANY WORK ACCOMPLISHED WITHOUT THE APPROVAL OF THE INSPECTOR WILL BE SUBJECT TO REJECTION.

REVIEWED FOR CONFORMANCE TO PARKER WATER AND SNAITATION DISTRICT STANDARDS.

BY: _____ (DISTRICT REPRESENTATIVE)

DATE: _____

APPROVED FOR CONSTRUCTION:
PARKER WATER AD SANITATION DISTRICT

BY: _____ (DISTRICT ENGINEER)

DATE:

811 Know what's below. Call before you dig.

REV	DATE	DESCRIPTION	BY

Kimley»Horn

PREPARED BY:

PREPARED FOR: McDonald's USA, LLC ©

These drawings and specifications are the confidential and proprietary property of McDonald's USA, LLC and shall not be copied or reproduced without written authorization. The contract documents were prepared for use on this specific site in conjunction with its issue date and are not suitable for use on other sites or projects. The re-use of these drawings for reference or example on another project requires the services of properly licensed architects and engineers. Reproduction of the contract documents for reuse on another project is not authorized.

DRAWN BY	REVIEWED BY	PROJ. MGR.
JJM	JRH	
STD ISSUE DATE	DATE ISSUED	
	7/19/2022	

TITLE: UTILITY PLANS

DESCRIPTION: COVER SHEET

SITE ID: 91585

SITE ADDRESS: NEAR SEC PARKER ROAD AND STROH ROAD, PARKER CO

C2.0

PARKER WATER AND SANITATION GENERAL NOTES

1. ALL MATERIALS AND WORKMANSHIP SHALL BE IN CONFORMANCE WITH THE PWSD ENGINEERING STANDARDS AND SPECIFICATIONS, LATEST VERSION.
2. THE CONTRACTOR SHALL CONTACT ALL APPROPRIATE UTILITY COMPANIES AND THE TOWN OF PARKER, DOUGLAS COUNTY AND OTHER NEIGHBORING CITIES AND TOWNS PRIOR TO THE BEGINNING OF ANY CONSTRUCTION. CONTRACTOR SHAL BE RESPONSIBLE FOR LOCATING AND EXISTING UTILITY (INCLUDING DEPTHS) WHICH MAY CONFLICT WITH THE PROPOSED CONSTRUCTION. ALL EXISTING UTILITIES SHALL BE PROTECTED FROM DAMAGE BY THE CONTRACTOR. DAMAGED UTILITIES SHALL BE REPAIRED BY THE CONTRACTOR AT HIS OWN EXPENSE.
3. ALL ITEMS SHOWN ON THE PLANS AS EXISTING ARE SHOWN IN APPROXIMATE LOCATIONS ONLY. THE ACTUAL LOCATIONS MAY VARY FROM THE PLANS, ESPECIALLY IN THE CASE OF UNDERGROUND UTILITIES. WHENEVER THE CONTRACTOR DISCOVERS A DISCREPANCY IN THE LOCATIONS CONTACT THE PWSD IMMEDIATELY.
4. PWSD ENGINEER AND OTHER APPROVING AGENCIES ARE TO BE NOTIFIED 48 HOURS PRIOR TO CONSTRUCTION.
5. THE CONTRACTOR SHALL OBTAIN, AT HIS EXPENSE, ALL PERMITS NECESSARY TO PERFORM THE PROPOSED WORK.
6. ALL CONCRETE SHALL BE A MINIMUM OF CLASS A, 6 SACK, TYPE II, 3000–POUND COMPRESSION STRENGTH.
7. THE DESIGN ENGINEER SHALL SUBMIT ONE (1) SET OF AS–BUILT DRAWINGS AND ELECTRONIC FILES TO THE DISTRICT ENGINEER FOR APPROVAL BY DISTRICT. AFTER APPROVAL HAS BEEN GRANTED BY THE DISTRICT ENGINEER, FULL SIZE PRINTS SHALL BE TRANSMITTED TO THE PWSD OFFICE.
8. NO WORK SHALL BE BACKFILLED UNTIL THE CONSTRUCTION HAS BEEN INSPECTED AND APPROVED FOR BACKFILLING BY THE DISTRICT ENGINEER OR REPRESENTATIVE OF THE DISTRICT ENGINEER. ALL BACKFILL MATERIAL SHALL BE COMPACTED TO 95% STANDARD PROCTOR DENSITY. COMPACTION TESTS MUST BE SUBMITTED TO DISTRICT ENGINEER PRIOR TO PROBATIONARY ACCEPTANCE.
9. TRENCHES SHALL BE EXCAVATED AND THE PIPE EXPOSED FOR THE INSPECTION AT ANY LOCATION ON THE PROJECT IF SO ORDERED BY THE INSPECTOR.
10. THE CONTRACTOR WILL BE HELD RESPONSIBLE FOR THE PROPER FUNCTIONING OF LINES (WATER AND SEWER) FOR UP TO TWO (2) YEARS FROM THE DATE OF PROBATIONARY ACCEPTANCE OF THE LINES BY THE DISTRICT. ANY MALFUNCTION DURING THIS PERIOD OF GUARANTEE SHALL BE REMEDIED BY THE CONTRACTOR TO THE SATISFACTION OF THE DISTRICT ENGINEER AT NO EXPENSE TO THE DISTRICT.
11. SURFACE GRADES ARE TO BE WITHIN PLUS OR MINUS ONE FOOT OF FINISHED GRADE AND VERIFICATION OF COMPACTION RESULTS OBTAINED PRIOR TO THE INSTALLATION OF WATER AND SEWER LINES. RESULTS MUST BE SUBMITTED TO THE DISTRICT ENGINEER.
12. ALL SERVICES WILL BE PERMANENTLY MARKED ON CURB FACE AS FOLLOWS:
    "X" FOR SANITARY SEWER SERVICES
    "V" FOR WATER SERVICES
13. NO TREES ALLOWED IN EASEMENT OR WITHIN 8' OF WATER OR SANITARY MAINS IN RIGHT OF WAY.
14. THE CONTRACTOR SHALL HAVE IN HIS POSSESSION AT ALL TIMES ONE (1) SIGNED COPY OF THE PLANS WHICH HAVE BEEN APPROVED BY THE PWSD AND THE DISTRICT ENGINEER AND ONE (1) COPY OF THE LATEST PWSD SPECIFICATION MANUAL.

WATER SYSTEM NOTES

1. ALL MATERIALS AND WORKMANSHIP SHALL BE IN CONFORMANCE WITH THE PWSD ENGINEERING STANDARDS AND SPECIFICATIONS, LATEST VERSION.
2. ALL WATER MAINS SHALL BE PER PWSD MATERIALS SPECIFICATIONS. ALL MATERIALS IN CONTACT WITH POTABLE WATER SHALL BE SUITABLE FOR CHLORINATED AND CHLORAMINATED WATER.
3. ALL BENDS, PLUGS, REDUCERS, AND FIRE HYDRANTS TO BE RODDED OR MEGA–LUGGED. ALL FITTINGS SHALL BE WRAPPED PER PWSD MATERIALS SPECIFICATIONS.
4. THERE SHALL BE A MINIMUM OF 4.5 FEET OVER ALL WATER MAINS.
5. FIRE HYDRANTS SHALL CONFORM TO AWWA C–502 "DRY BARREL FIRE HYDRANTS" PIPE HYDRANT ASSEMBLIES PER PWSD SPECIFICATIONS.
6. ALL BENDS, TEES, FIRE HYDRANTS, BLOW OFFS, AND PLUGS AT DEAD–END MAINS SHALL BE PROTECTED FROM THRUST WITH CONCRETE THRUST BLOCKS.
7. PRECAUTIONS SHALL BE TAKEN TO PROTECT THE INTERIOR OF PIPES, FITTINGS, AND VALVES AGAINST CONTAMINATION. ALL OPENINGS IN THE PIPELINE SHALL BE CLOSED WITH WATERTIGHT PLUGS WHEN PIPE LAYING IS STOPPED AT THE CLOSE OF THE DAY'S WORK OR FOR OTHER REASONS, SUCH AS REST BREAKS OR MEAL PERIODS.
8. VALVES IN STREETS ARE TO BE LOCATED AT PROPERTY LINE EXTENSIONS EXCEPT FOR TAPPING FEES; WHERE AN ADDITIONAL VALVE SHALL BE PLACED ON THE TAPPING TEE. OTHER LOCATIONS SHOWN ON THE PLANS.
9. WHEN NECESSARY TO LOWER OR RAISE WATER LINES AT STORM DRAINS AND OTHER UTILITY CROSSINGS, A MINIMUM CLEARANCE OF 1.5 FEET SHALL BE MAINTAINED BETWEEN OUTSIDE OF PIPES.
10. THE CONTRACTOR SHALL NOTIFY THE PWSD AT LEAST 48 HOURS PRIOR TO ANY CONSTRUCTION. IF WORK IS SUSPENDED FOR ANY PERIOD OF TIME AFTER INITIAL START–UP, THE CONTRACTOR MUST NOTIFY THE DISTRICT ENGINEER 48 HOURS PRIOR TO RE–START.
11. PIPE BEDDING SHALL BE CLEAN, WELL–GRADED SAND OR SQUEEGEE SAND IN ACCORDANCE WITH PWSD STANDARDS AND SPECIFICATIONS, LATEST REVISION.
12. THE CONTRACTOR SHALL NOTIFY THE PUBLIC UTILITY COMPANIES AND DETERMINE THE LOCATION OF ALL EXISTING UNDERGROUND UTILITIES PRIOR TO PROCEEDING WITH EXCAVATION. ALL WORK PERFORMED IN THE AREA OF THE PUBLIC UTILITIES SHALL BE PERFORMED ACCORDING TO THE REQUIREMENTS OF THESE AGENCIES.
13. COMPACTION OF ALL TRENCHES MUST BE ATTAINED IN ACCORDANCE WITH THE SOILS REPORTS AND COMPACTION TEST RESULTS SUBMITTED TO THE DISTRICT ENGINEER PRIOR TO PROBATIONARY ACCEPTANCE.
14. AT LEAST FIVE (5) DAYS PRIOR TO THE START OF CONSTRUCTION, A PRE–CONSTRUCTION MEETING WILL BE HELD AT THE OFFICE OF THE DISTRICT ENGINEER AND ATTENDED BY THE CONTRACTOR, DESIGN ENGINEER, AND REPRESENTATIVE OF OTHER APPROVING AGENCIES.
15. CHLORINATION AND FLUSHING: ALL WATER MAINS SHALL BE INSTALLED AND CHLORINATED PER PWSD SPECIFICATIONS. CHLORINATION OF FINISHED PIPELINE COMPLETED BEFORE HYDROSTATIC TESTING.
16. HYDROSTATIC TESTING: ALL WATER MAINS SHALL BE TESTED PER THE REQUIREMENTS OF THE PWSD SPECIFICATIONS UP TO MINIMUM OF 150 PSI IN THE PRESENCE OF A PWSD INSPECTOR/ENGINEER.

SEWER SYSTEM NOTES

1. ALL MATERIALS AND WORKMANSHIP SHALL BE IN CONFORMANCE WITH THE PWSD ENGINEERING STANDARDS AND SPECIFICATIONS, LATEST VERSION.
2. ALL SEWER MAINS SHALL BE PVC, ASTM D–3034, SDR 35 OR APPROVED EQUAL. ALL SEWER MAIN SIZE IS 8" IN DIAMETER UNLESS OTHERWISE NOTED.
3. SEWER LINES SHALL BE INSTALLED 5.0 FEET SOUTH OR WEST OF STREET CENTERLINE, UNLESS OTHERWISE SHOWN ON PLANS. SEWER LINES SHALL BE 10.00 FEET FROM WATER LINES EXCEPT WHEN CROSSING EACH OTHER. SEWER LINES WHICH CROSS LESS THAN 1.50 FEET VERTICALLY FROM THE WATER MAIN SHALL BE ENCASED IN CONCRETE AS PER PWSD SPECIFICATIONS. USE RUBBER GASKETS FOR PVC ENCASEMENT.
4. SEWER RIM ELEVATIONS SHOWN ARE APPROPRIATE ONLY AND ARE NOT TO BE TAKEN AS FINAL ELEVATIONS. RING AND COVER SHALL BE SET IN CENTERED CONCRETE RINGS WITH RAM–NECK FOR ADJUSTMENT TO MATCH FINAL PAVEMENT ELEVATIONS.
5. THE CONTRACTOR AND SURVEY CREW SHALL VERIFY ELEVATIONS OF EXISTING SEWER LINES AND MANHOLES TO BE TIED TO PRIOR TO CONSTRUCTION OR STAKING OF SANITARY SEWER.
6. NO UNDERDRAIN SYSTEM WILL BE ALLOWED TO BE PLACED IN MAINLINE OR SEWER SERVICE TRENCHES.
7. SEWER SERVICE TEES FOR EACH UNTIL SHALL BE STAKED BY A SURVEY CREW AND FURNISHED AND INSTALLED BY THE CONTRACTOR. THE CONTRACTOR SHALL FURNISH TO THE ENGINEER "AS CONSTRUCTED" LOCATION OF TEES. SEWER WYES SHALL BE USED RATHER THAN TEES.
8. ALL MANHOLES SHALL BE 48–INCHES IN DIAMETER WITH 24–INCH RING AND COVER, ECCENTRIC CONE UNLESS OTHERWISE SPECIFIED. ALL MANHOLES SHALL HAVE SHAPED INVERTS.
9. PIPE BEDDING SHALL BE CLASS "B" AND SHALL CONFORM TO ASTM C–33 OR D–448 GRADATION NO. 6 OR NO. 67.
10. AT LEAST FIVE (5) DAYS PRIOR TO START OF CONSTRUCTION, A PRE–CONSTRUCTION MEETING WILL BE HELD AT THE OFFICE OF THE DISTRICT ENGINEER AND ATTENDED BY THE CONTRACTOR AND REPRESENTATIVES OF THE OTHER APPROVING AGENCIES. IT WILL BE THE RESPONSIBILITY OF THE CONTRACTOR TO CONTACT THE DISTRICT ENGINEER TO SCHEDULE THIS MEETING.
11. THE CONTRACTOR SHALL HAVE IN HIS POSSESSION AT ALL TIMES ONE (1) SIGNED COPY OF THE PLANS WHICH HAVE BEEN APPROVED BY THE PWSD AND THE DISTRICT ENGINEER AND ONE (1) COPY OF THE LATEST PWSD SPECIFICATION MANUAL.
12. ALL SEWER LINES SHALL BE TESTED IN ACCORDANCE WITH THE PWSD STANDARDS AND SPECIFICATIONS PRIOR TO ACCEPTANCE OR ANY CONNECTION TO AN EXISTING SEWER LINE.
13. PRIOR TO STARTING WORK WHERE SEWER MAIN IS TO BE CONNECTED TO EXISTING PWSD SEWER SYSTEMS. THE NEAREST MANHOLE TO THE POINT OF TIE–IN SHALL BE PLUGGED WITH A PLUMBER'S PLUG ON THE INLET SIDE BY THE CONTRACTOR. THIS PLUG SHALL REMAIN IN PLACE UNTIL FINAL PROBATIONARY ACCEPTANCE BY PWSD. THE CONTRACTOR SHALL BE RESPONSIBLE FOR PUMPING AND CLEANING THESE MANHOLES AND REMOVING THE PLUG WHEN INSTRUCTED BY THE DISTRICT.
14. PRIOR TO PROBATIONARY ACCEPTANCE WALK–THROUGH, THE CONTRACTOR SHALL JET CLEAN THE ENTIRE SANITARY SEWER SYSTEM AND PUMP OUT AT THE PLUGGED MANHOLE.

811 Know what's **below.** **Call** before you dig.

REV	DATE	DESCRIPTION	BY

Kimley»Horn

PREPARED BY:

PREPARED FOR: McDonald's USA, LLC ©

These drawings and specifications are the confidential and proprietary property of McDonald's USA, LLC and shall not be copied or reproduced without written authorization. The contract documents were prepared for use on this specific site in conjunction with its issue date and are suitable for use on a private site or at a later time. Use of these drawings for reference or example on another project requires the services of properly licensed architects and engineers. Reproduction of the contract documents for reuse on another project is not authorized.

TITLE: **UTILITY PLANS**

DESCRIPTION: **DETAILS**

SITE ID: 91585

SITE ADDRESS: NEAR SEC PARKER ROAD AND STROH ROAD, PARKER CO

DRAWN BY: JJM

STD ISSUE DATE

REVIEWED BY: JRH

DATE ISSUED: 7/19/2022

C2.1

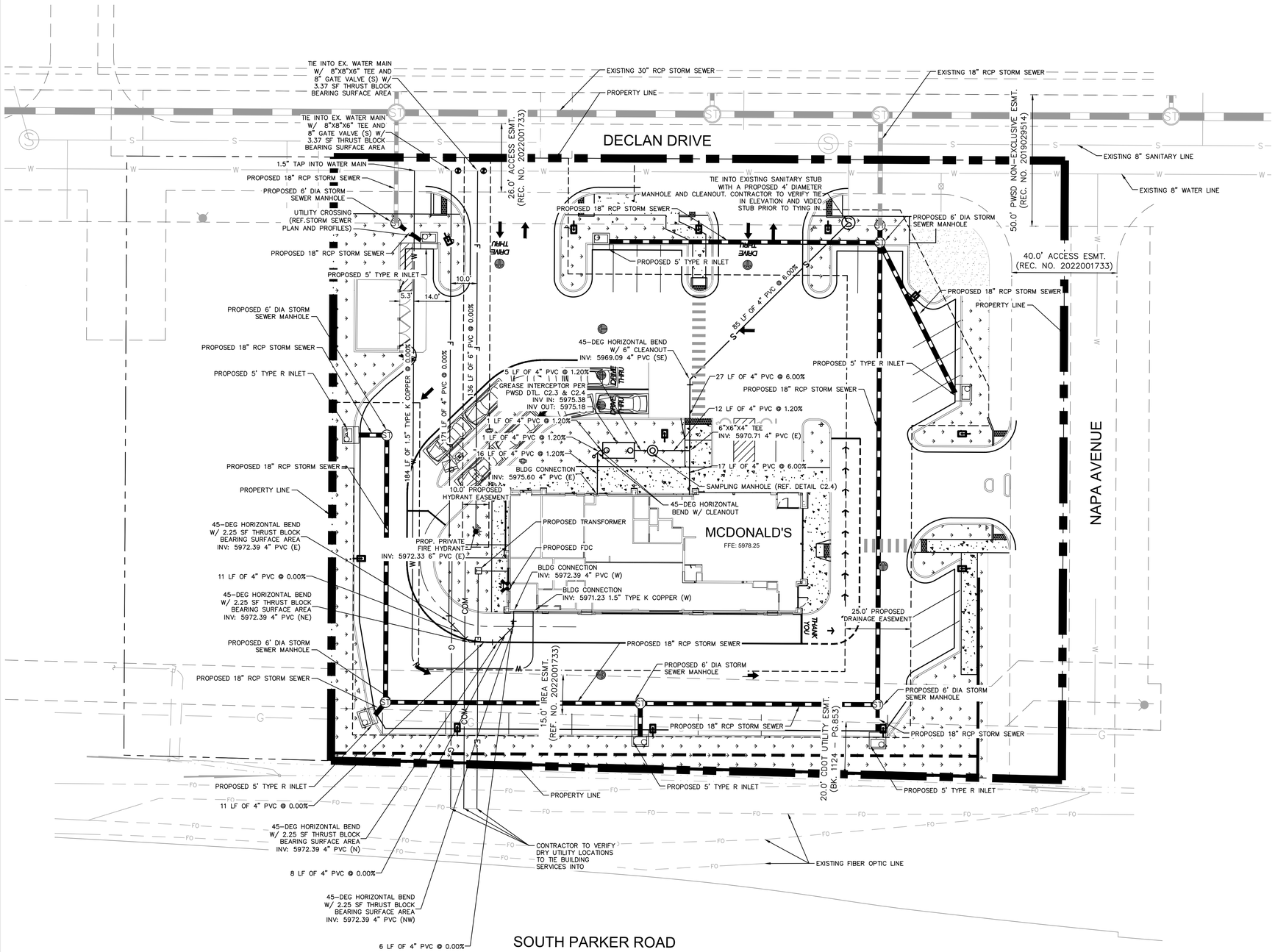

LEGEND:

- PROPERTY LINE
- EASEMENT
- SCREEN WALL
- W — EX. WATER LINE
- S — EX. SANITARY LINE
- EX. STORM SEWER
- CCTV — EX. PHONE LINE
- E — EX. ELECTRIC LINE
- G — EX. GAS LINE
- W — PROP. WATER LINE
- S — PROP. SANITARY LINE
- PROP. STORM SEWER
- CCTV — PROP. PHONE LINE
- E — PROP. ELECTRIC LINE
- G — PROP. GAS LINE

GENERAL NOTES:

1. ALL EXISTING UTILITIES ARE TO REMAIN UNLESS OTHERWISE NOTED.
2. LIGHT POLES SHALL BE SETBACK AT LEAST 18" FROM TOP BACK OF CURB ADJACENT TO HEAD IN PARKING STALLS.
3. CONTRACTOR VIDEO EXISTING SANITARY SEWER FROM END OF EXISTING STUB TO EXISTING MAIN TO VERIFY CONDITION PRIOR TO CONNECTION.

CAUTION NOTES:

1. CONTRACTOR TO VERIFY TIE IN LOCATIONS TO EXISTING UTILITIES.
2. CONTRACTOR TO MAINTAIN AT LEAST 18" OF VERTICAL SEPARATION BETWEEN UTILITIES.

ALL FIRE HYDRANTS SHALL BE INSTALLED ACCORDING TO WATER UTILITY STANDARDS. THE NUMBER AND LOCATIONS OF THE FIRE HYDRANTS AS SHOWN ON THE OVERALL UTILITY PLAN ARE CORRECT AS SPECIFIED BY THE TOWN OF PARKER, COMMUNITY DEVELOPMENT DEPARTMENT.

FIRE CODE OFFICIAL OR DESIGNATED REPRESENTATIVE DATE

(NOTE – UNDERGROUND FIRE LINE (UFL) SUBMITTAL DOCUMENTS MUST MEET THE REQUIREMENTS OF NFPA 24 WHEN SUBMITTING FOR REVIEW.)

THE TOWN OF PARKER REVIEW CONSTITUTES GENERAL COMPLIANCE WITH THE TOWN'S STANDARDS AND APPROVED VARIANCES, SUBJECT TO THESE PLANS BEING STAMPED, SIGNED, AND DATED BY THE PROFESSIONAL ENGINEER OF RECORD. REVIEW BY THE TOWN DOES NOT CONSTITUTE APPROVAL OF THE PLAN DESIGN OR ACCURACY AND CORRECTNESS OF ENGINEERING CALCULATIONS. ERRORS IN THE DESIGN OR CALCULATIONS REMAIN THE RESPONSIBILITY OF REGISTERED PROFESSIONAL ENGINEER WHOSE STAMP AND SIGNATURE ARE AFFIXED TO THIS DOCUMENT.

THIS REVIEW DOES NOT CONSTITUTE APPROVAL OF ANY PRIVATE ON-SITE IMPROVEMENTS WHICH MAY BE SHOWN. CONSTRUCTION CANNOT COMMENCE UNTIL ALL REQUIRED DRAINAGE/TRAFFIC REPORT(S), FINAL DEVELOPMENT PLAN(S), SPECIAL REVIEW(S), GRADING PERMIT, AND/OR OTHER PERMITS ARE COMPLETE, APPROVED AND ON FILE WITH THE TOWN OF PARKER.

TOWN OF PARKER, DIRECTOR OF ENGINEERING DATE

811 Know what's below. Call before you dig.

REV	DATE	DESCRIPTION	BY

Kimley»Horn

PREPARED BY:

PREPARED FOR: McDonald's USA, LLC ©

These drawings and specifications are the confidential and proprietary property of McDonald's USA, LLC and shall not be copied or reproduced without written authorization. The contract documents were prepared for use on this specific site in conjunction with its issue date and are intended for the purchase of McDonald's services. Any other use of these drawings for reference or example on another project requires the services of properly licensed architects and engineers. Reproduction of the contract documents for reuse on another project is not authorized.

DRAWN BY	REVIEWED BY	DATE ISSUED
JJM	JRH	7/19/2022
STD ISSUE DATE		

TITLE: UTILITY PLANS

DESCRIPTION: UTILITY PLAN

SITE ID: 91585

SITE ADDRESS: NEAR SEC PARKER ROAD AND STROH ROAD, PARKER CO

C2.2

INSPECTION POLICY:

1. ALL SERVICE INSPECTIONS MUST BE SCHEDULED AT LEAST 24 HOURS IN ADVANCE OF THE REQUESTED INSPECTION.
2. SERVICE INSPECTIONS WILL OCCUR BETWEEN 1:00 P.M. AND 3:00 P.M. SPECIFIC INSPECTION TIMES ARE NOT AVAILABLE.
3. IF THE CONTRACTOR IS NOT READY FOR INSPECTION WHEN THE INSPECTOR ARRIVES AT THE SITE OR SERVICE FAILS, A RE-INSPECTION WILL HAVE TO BE SCHEDULED IN ACCORDANCE WITH NOTES 1 AND 2 ABOVE AND A RE-INSPECTION FEE CHARGED.
4. SHOULD THE SERVICE LINES BE DAMAGED BY LATER CONSTRUCTION, AN INSPECTION OF THE REPAIR WILL BE REQUIRED IN ACCORDANCE WITH NOTES 1 AND 2 ABOVE.
5. THE CONTRACTOR SHALL LEAVE ALL PIPE AND FITTINGS EXPOSED FOR THE INSPECTOR TO OBSERVE. INSPECTORS WILL NOT ENTER ANY EXCAVATIONS TO CHECK MATERIALS. THE TOP LAYER OF BEDDING CAN BE ADDED AFTER THE INSPECTION HAS BEEN COMPLETED.
6. ALL EXCAVATIONS SHALL BE IN ACCORDANCE WITH OSHA STANDARDS.
7. LOTS WITHOUT BUILDING ADDRESSES BEFORE DISTRICT INSPECTION OR METER SET WILL FAIL AUTOMATICALLY.
8. CONTRACTOR MUST BE PRESENT AT TIME OF INSPECTION. UNLESS COORDINATED WITH DISTRICT INSPECTOR.

INSTALLATION NOTES:

WATER

1. ACCEPTABLE PIPE MATERIALS SHALL BE K-COPPER TUBING. (3/4" MIN.)
2. APPROVED BEDDING TO BE SQUEEGEE.
3. ONLY ONE COUPLING WILL BE ALLOWED BETWEEN THE STUB-IN AND BUILDING. COMPRESSION COUPLINGS WILL NOT BE ALLOWED ON NEW CONSTRUCTION. SILVER SOLDERED JOINTS MUST BE USED ON SERVICES LARGER THAN 3/4". SILVER SOLDERED JOINTS MUST BE INSPECTED BY PWSD PRIOR TO BURIAL. FLARED COUPLINGS WILL BE ALLOWED ON ALL SERVICES 3/4" AND SMALLER.
4. A WATER SERVICE WHICH CROSSES A SEWER SERVICE CAN DO SO ONLY AT A 45-90° ANGLE. WATER SERVICES SHALL BE LOCATED A MINIMUM OF 18" ABOVE SEWER SERVICE.
5. WATER SERVICE FOUNDATION PENETRATIONS SHALL BE WATERPROOFED USING MASTIC OR OTHER APPROVED METHOD, CRAWL SPACE REQUIRES CONTINOUS COPPER WITH A 1' BURY.
6. CURB STOP MUST BE PLUMB AND CENTERED OVER THE NUT. IT SHOULD BE STRAPPED TO THE METER PIT (RESIDENTIAL INSTALLATIONS) OR CENTERED OVER THE EASEMENT LINE (COMMERCIAL INSTALLATIONS). THE ASSEMBLY MUST BE AT OR SLIGHTLY ABOVE FINISHED GRADE.
7. MOVED CURB BOXES MUST BE INSPECTED BY PWSD PRIOR TO BURIAL.
8. WATERLINE MUST BE ATTACHED TO A SUPPORT BOARD THAT IS MOUNTED TO THE WALL.
9. NO VOIDS ALLOWED UNDER WATERLINES FROM STOP BOX TO FOUNDATION.
10. CURBSTOP BOXES AND METER PITS CANNOT BE IN DRIVEWAYS.
11. ONLY 3/4" (JUMPER) PIPES (RESIDENCES) ARE ALLOWED. (JUMPER) PIPES WILL BE REMOVED PRIOR TO METER SET DATE.
12. ALL SERVICES WILL BE PERMANENTLY MARKED ON CURB FACE AS FOLLOWS:
    "X" FOR SANITARY SEWER SERVICE
    "V" FOR WATER SERVICES
13. NO SPLICES OR FLARED COUPLINGS ALLOWED ON SERVICES LARGER THAN 3/4". SILVER SOLDIERED JOINTS MUST BE USED IN MOVING STOPBOXES ON SERVICES LARGER THAN 3/4". SILVER SOLDIERED JOINTS MUST BE INSPECTED BY PWSD PRIOR TO BURIAL. FLARED COUPLINGS WILL BE ALLOWED ON ALL SERVICES 3/4" AND SMALLER.

PARKER WATER & SANITATION DISTRICT

DISTRICT POLICIES & INSTALLATION NOTES FOR WATER SERVICES

SCALE: NONE	DATE: 2/96
APPROVED: PVR, DIRECTOR OF ENGINEERING	1/04 1/16 10/16

2016 REVISION — SHEET W1.1

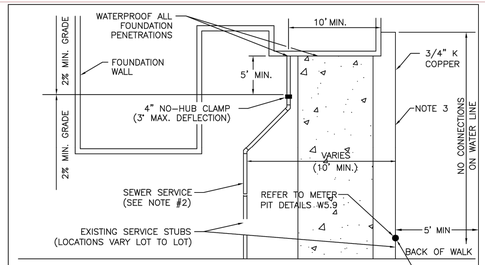

TYPICAL SERVICES PLAN VIEW

NTS

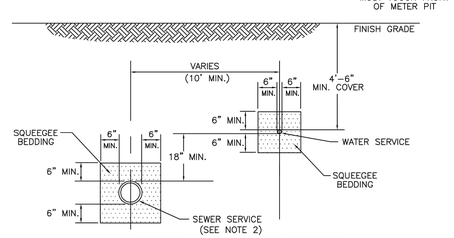

TYPICAL SERVICES SECTION

NTS

NOTE

1. SEE SHEET W1.1 FOR DISTRICT POLICIES AND INSTALLATION NOTES.
2. REFER TO SEWER SERVICES DETAIL SHEET S1.2.
3. 4" PVC SLEEVES REQUIRED FOR SERVICE LINES UNDER CONCRETE SURFACE.

PARKER WATER & SANITATION DISTRICT

TYPICAL WATER SERVICES

SCALE: NONE	DATE: 2/96
APPROVED: PVR, DIRECTOR OF ENGINEERING	1/04 10/16 06/05 12/07 1/16

2016 REVISION — SHEET W1.2

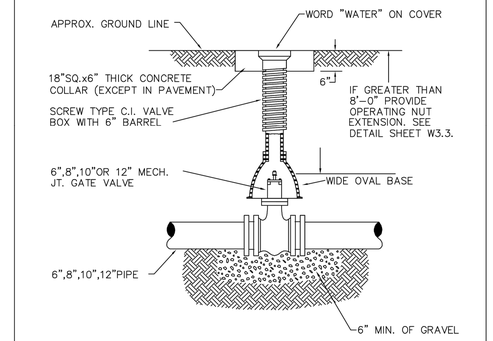

6-INCH VALVE BOXES

CHECK MATERIAL SPECIFICATIONS

NOTES:

1. ALL C.I. SHALL BE WRAPPED WITH 8 MIL. MIN. THICKNESS POLYETHYLENE.
2. VALVE NUT SHALL BE CENTERED.
3. VALVE BOX SHALL BE PLUMB.
4. SEE MATERIAL SPECIFICATIONS FOR VALVE BOX WITH GREATER THAN BURIED DEPTH OF 4.5 FT.

PARKER WATER & SANITATION DISTRICT

VALVE BOX DETAIL

SCALE: NONE	DATE: 2/96
APPROVED: PVR, DIRECTOR OF ENGINEERING	5/98 10/16 8/99 12/07 1/16

2016 REVISION — SHEET W3.10

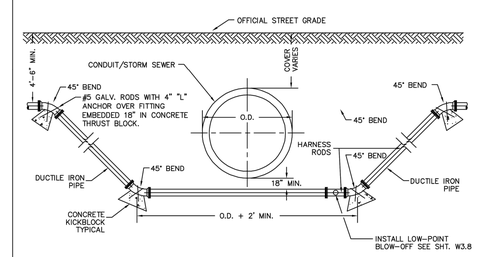

NOTES:

1. LENGTH OF EXTENSION OF PIPE AND HARNESS RODS SHALL BE IN ACCORDANCE WITH THESE ENGINEERING STANDARDS.
2. ALL WATER MAINS TWELVE (12") INCHES OR SMALLER, WHICH CROSS UNDER CONDUITS/STORM SEWER SHALL BE DUCTILE IRON OR PVC PER SPECIFICATIONS.
3. A BORED CROSSING MAY BE REQUIRED BY THE ENGINEER.
4. CONCRETE KICKBLOCKS PER SHEET W3.18.

PARKER WATER & SANITATION DISTRICT

CONDUIT OR STORM SEWER CROSSING

SCALE: NONE	DATE: 2/96
APPROVED: PVR, DIRECTOR OF ENGINEERING	5/98 10/16 2/00 12/07 1/16

2016 REVISION — SHEET W4.6

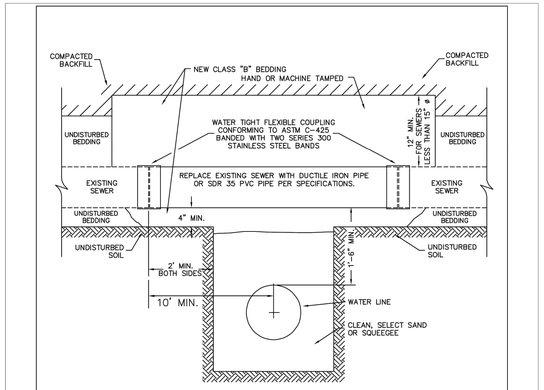

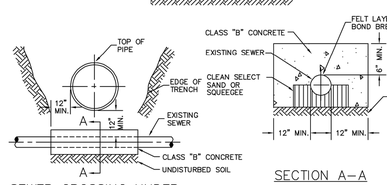

SEWER CROSSING UNDER

LESS THAN 18" BETWEEN PIPES

1. PIPE SHALL BE WRAPPED WITH FELT LAYER BEFORE ENCASING.

SECTION A-A

PARKER WATER & SANITATION DISTRICT

CROSSING STORM & SANITARY SEWERS

SCALE: NONE	DATE: 2/96
APPROVED: PVR, DIRECTOR OF ENGINEERING	1/16 10/16

2016 REVISION — SHEET W4.7

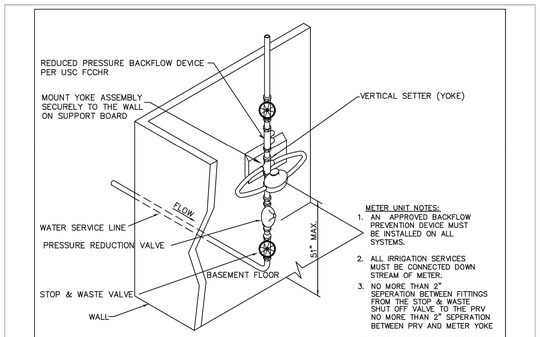

METER UNIT NOTES:

1. AN APPROVED BACKFLOW PREVENTION DEVICE MUST BE INSTALLED ON ALL SYSTEMS.
2. ALL IRRIGATION SERVICES MUST BE CONNECTED DOWN STREAM OF METER.
3. NO MORE THAN 2" SEPERATION BETWEEN FITTINGS FROM THE STOP & WASTE SHUT OFF VALVE TO THE PRV NO MORE THAN 2" SEPERATION BETWEEN PRV AND METER YOKE
4. IF SERVICE FAILS INSPECTION A RE-INSPECTION FEE WILL BE ASSIGNED.
5. ALL METERS PROVIDED BY PWSD.

ISOMETRIC VIEW

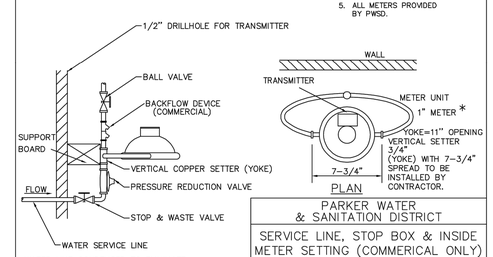

WATER LINE CONDENSED TO ELIMINATE ANY EXPOSED COPPER BELOW METER YOKE.

ELEVATION

PLAN

PARKER WATER & SANITATION DISTRICT

SERVICE LINE, STOP BOX & INSIDE METER SETTING (COMMERICAL ONLY)

SCALE: NONE	DATE: 2/96
APPROVED: PVR, DIRECTOR OF ENGINEERING	* ADDITION 01/04 10/16 06/05 1/16

2016 REVISION — SHEET W5.9

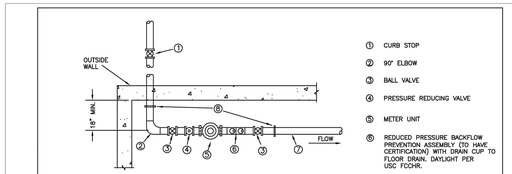

PLAN

1. CURB STOP
2. 90° ELBOW
3. BALL VALVE
4. PRESSURE REDUCING VALVE
5. METER UNIT
6. REDUCED PRESSURE BACKFLOW PREVENTION ASSEMBLY (TO HAVE CERTIFICATION) WITH DRAIN CUP TO FLOOR DRAIN. DAYLIGHT PER USC FCCHR.
7. TYPE K COPPER TUBING
8. CLAMP GROUND WIRE TO EACH SIDE OF METER UNIT
9. DRILL A HOLE IN THE WALL FOR TRANSMITTER

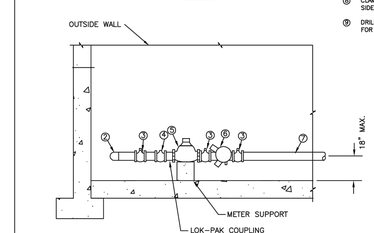

ELEVATION

NOTES

1 - PIPE JOINT SHALL BE THREADED OR SOLDERED WITH SILVER SOLDER.
2 - INSTALLATION MUST ALLOW ACCESS FOR MAINTENANCE AND BE PROTECTED FROM FREEZING.
3 - SEE WATER SYSTEM SPECIFICATIONS FOR GENERAL METER NOTES.
4 - COMPANION FLANGES SHALL BE BRASS.
5 - METER SUPPORT SHALL BE EITHER CONCRETE OR ADJ. STEEL PIPE (SEE SHEET W3.10)
6 - 1.0' MINIMUM CLEARANCE AROUND BACKFLOW DEVICE
7 - FLOOR DRAIN TO BE 2X PIPE SIZE
8 - FOR IRRIGATION USES; ADD RAIN SENSOR AND SMART E.T. CONTROLLER

METER	YOKE DISTANCE
1.5"	13.25" WITH ADJUSTABLE FLANGE FOR GASKET
2"	17.25" WITH ADJUSTABLE FLANGE FOR GASKET

PARKER WATER & SANITATION DISTRICT

INSIDE SETTING FOR $1\frac{1}{2}$" & 2" METER

SCALE: NONE	DATE: 2/96
APPROVED: PVR, DIRECTOR OF ENGINEERING	8/99 01/02 01/16 2/00 06/05 10/16 4/01 07/06

2016 REVISION — SHEET W5.14

811 Know what's below. Call before you dig.

REV	DATE	DESCRIPTION	BY

Kimley»Horn

PREPARED BY:

PREPARED FOR: McDonald's USA, LLC ©

These drawings and specifications are the confidential and proprietary property of McDonald's USA, LLC and shall not be copied or reproduced without written authorization. The contract documents were prepared for use on this specific site in conjunction with its issue date and are not suitable for reuse on another project. Any modification of these drawings for reference or example on another project requires the services of properly licensed architects and engineers. Reproduction of the contract documents for reuse on another project is not authorized.

DRAWN BY: JJM — STD ISSUE DATE
REVIEWED BY: JRH — DATE ISSUED: 7/6/2022

TITLE: UTILITY PLANS

DESCRIPTION: PWSD DETAILS

SITE ID: 91585

SITE ADDRESS: NEAR SEC PARKER ROAD AND STROH ROAD, PARKER CO

C2.3

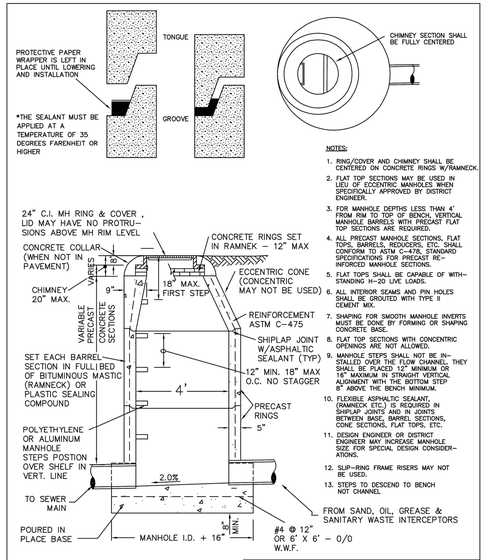

NOTES:

1. RING/COVER AND CHIMNEY SHALL BE CENTERED ON CONCRETE RINGS W/RAMNECK.
2. FLAT TOP SECTIONS MAY BE USED IN LIEU OF ECCENTRIC MANHOLES WHEN SPECIFICALLY APPROVED BY DISTRICT ENGINEER.
3. FOR MANHOLE DEPTHS LESS THAN 4' FROM RIM TO TOP OF BENCH, VERTICAL MANHOLE BARRELS WITH PRECAST FLAT TOP SECTIONS ARE REQUIRED.
4. ALL PRECAST MANHOLE SECTIONS, FLAT TOPS, BARRELS, REDUCERS, ETC. SHALL CONFORM TO ASTM C-478, STANDARD SPECIFICATIONS FOR PRECAST RE-INFORCED MANHOLE SECTIONS.
5. FLAT TOPS SHALL BE CAPABLE OF WITH-STANDING H-20 LIVE LOADS.
6. ALL INTERIOR SEAMS AND PIN HOLES SHALL BE GROUTED WITH TYPE II CEMENT MIX.
7. SHAPING FOR SMOOTH MANHOLE INVERTS MUST BE DONE BY FORMING OR SHAPING CONCRETE BASE.
8. FLAT TOP SECTIONS WITH CONCENTRIC OPENINGS ARE NOT ALLOWED.
9. MANHOLE STEPS SHALL NOT BE IN-STALLED OVER THE FLOW CHANNEL. THEY SHALL BE PLACED 12" MINIMUM OR 16" MAXIMUM IN STRAIGHT VERTICAL ALIGNMENT WITH THE BOTTOM STEP 8" ABOVE THE BENCH MINIMUM.
10. FLEXIBLE ASPHALTIC SEALANT, (RAMNECK, ETC.) IS REQUIRED IN SHIPLAP JOINTS AND IN JOINTS BETWEEN BASE, BARREL SECTIONS, CONE SECTIONS, FLAT TOPS, ETC.
11. DESIGN ENGINEER OR DISTRICT ENGINEER MAY INCREASE MANHOLE SIZE FOR SPECIAL DESIGN CONSIDER-ATIONS.
12. SLIP-RING FRAME RISERS MAY NOT BE USED.
13. STEPS TO DESCEND TO BENCH NOT CHANNEL

NOTE;
SEAL INSIDE WITH MORTAR (TYP. ALL INTERIOR SEAMS)

PARKER WATER & SANITATION DISTRICT

SAMPLING MANHOLE

SCALE: NONE	DATE: 2/96
APPROVED: PVR	2/00 10/16 4/01 1/08 1/16
DIRECTOR OF ENGINEERING	

2016 REVISION — SHEET S5.3

INSPECTION POLICY:

1. ALL SERVICE INSPECTIONS MUST BE SCHEDULED WITH THE DISTRICT OFFICE AT LEAST 24 HOURS IN ADVANCE OF THE REQUESTED INSPECTION.
2. IF THE CONTRACTOR IS NOT READY FOR INSPECTION WHEN THE INSPECTOR ARRIVES AT THE SITE, A RE-INSPECTION WILL HAVE TO BE SCHEDULED IN ACCORDANCE WITH NOTE 1 ABOVE AND A RE-INSPECTION FEE CHARGED.
3. SHOULD THE SERVICE LINES BE DAMAGED BY LATER CONSTRUCTION, AN INSPECTION OF THE REPAIR WILL BE REQUIRED IN ACCORDANCE WITH NOTES 1 AND 2 ABOVE.
4. THE CONTRACTOR SHALL LEAVE ALL PIPE AND FITTINGS EXPOSED FOR THE INSPECTOR TO OBSERVE. INSPECTORS WILL NOT ENTER ANY EXCAVATIONS TO CHECK MATERIALS. THE TOP LAYER OF BEDDING CAN BE ADDED AFTER THE INSPECTION HAS BEEN COMPLETED.
5. ALL EXCAVATIONS SHALL BE IN ACCORDANCE WITH OSHA STANDARDS.
6. LOTS WITHOUT BULDING ADDRESSES OR LOT AND BLOCK NUMBERS BEFORE DISTRICT INSPECTION OR METER SET WILL FAIL AUTOMATICALLY.
7. CONTRACTOR MUST BE PRESSENT AT TIME OF INSPECTION UNLESS COORDINATED WITH DISTRICT INSPECTOR.

INSTALLATION NOTES:

SEWER

1. ACCEPTABLE PIPE MATERIALS ARE TO BE SDR 35 PVC PIPE, ABS PIPE AND PVC SCHD 40 PIPE. APPROVED BEDDING IS TO BE SQUEEGEE.
2. NO-HUB CLAMPS SHALL BE USED TO JOIN 2 MALE PIPE ENDS WITH A MAXIMUM DEFLECTION OF 3°.
3. MINIMUM GRADE SHALL BE 2%.
4. INSTALLATION SHALL INCLUDE NO MORE THAN 3 BENDS. 90° BENDS ARE NOT ALLOWED. SOLVENT WELDED PIPE WILL NOT BE ALLOWED.
5. CLEAN-OUTS SHALL BE INSTALLED AT 100' INTERVALS AND EVERY CHANGE IN DIRECTION. CLEAN-OUTS ARE NOT REQUIRED FOR SERVICES LESS THAN 100' UNLESS THERE ARE CHANGES IN DIRECTION. PROVIDE DUAL CLEAN-OUT WITHIN 5 FEET OF FOUNDATION.
6. STRESSING OF THE PIPE BETWEEN FITTINGS WILL NOT BE ALLOWED.
7. SEWER SERVICE LINE SHALL NOT BE LOCATED UNDER CONCRETE SURFACE.
8. ALL SERVICES WILL BE PERMANANTELY MARKED ON CURB FACE AS FOLLOWS:
   "X" FOR SANITARY SEWER SERVICE
   "V" FOR WATER SERVICES

PARKER WATER & SANITATION DISTRICT

DISTRICT POLICIES & INSTALLATION NOTES FOR SEWER SERVICES

SCALE: NONE	DATE: 2/96
APPROVED: PVR	01/02 10/16 1/08 1/16
DIRECTOR OF ENGINEERING	

2016 REVISION — SHEET S1.1

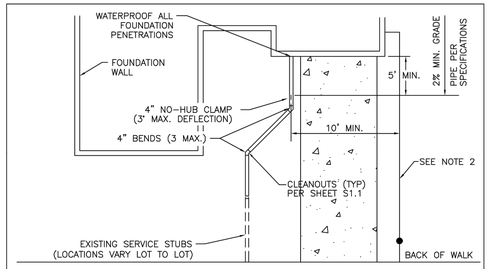

TYPICAL SERVICES PLAN VIEW

NTS

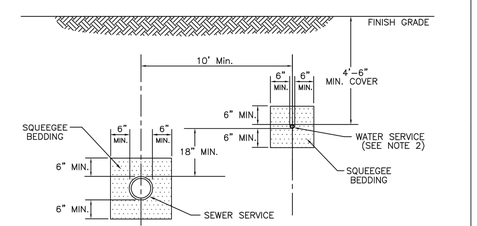

TYPICAL SERVICES SECTION

NTS

NOTE

1. SEE SHEET S1.1 FOR DISTRICT POLICIES AND INSTALLATION NOTES.
2. TYPICAL WATER SERVICES SHOWN ON SHEET W1.2 IN WATER DETAILS.

PARKER WATER & SANITATION DISTRICT

TYPICAL SEWER SERVICES

SCALE: NONE	DATE: 2/96
APPROVED: PVR	2/00 01/02 01/16 10/16
DIRECTOR OF ENGINEERING	

2016 REVISION — SHEET S1.2

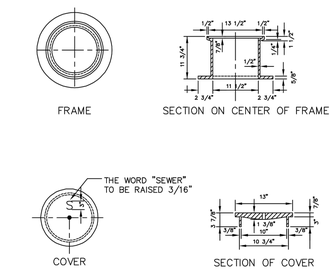

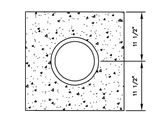

PARKER WATER & SANITATION DISTRICT

IN-LINE CLEANOUT SECTIONS

SCALE: NONE	DATE: 2/96
APPROVED: PVR	2/00 1/08 1/16 10/16
DIRECTOR OF ENGINEERING	

2016 REVISION — SHEET S4.12

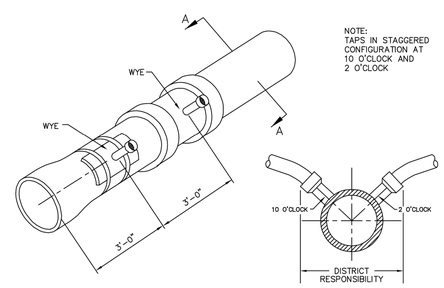

NOTE:
TAPS IN STAGGERED CONFIGURATION AT 10 O'CLOCK AND 2 O'CLOCK

SECTION A – A

Sewer service connections shall be positioned at either the 2 o'clock or the 10 o'clock postion on the circumference of the sewer main. On new installations, tee or wye fittings shall be used.When tapping into existing sewer main, a saddle connection and approved coring method shall be used. The minimum distance between service connections made along the pipe shall be 3 feet. The minimum distance from either the bell or spigot end of a pipe shall be 3 feet. The minimum distance from the center of a manhole to a service connection shall be either 7 feet or the transition point from the manhole trench to the normal pipe trench, whichever is greater. A maximum of 4 sewer service connections shall be allowed per 20 foot length of pipe. In all cases, a specific soils investigation should be conducted to assure that the external loading will be within allowable limits regardless of the number of taps involved.

DOMESTIC SEWER TAPPING DETAIL

PARKER WATER & SANITATION DISTRICT

DOMESTIC SEWER TAPPING DETAIL

SCALE: NONE	DATE: 2/96
APPROVED: PVR	4/01 1/08 1/16 10/16
DIRECTOR OF ENGINEERING	

2016 REVISION — SHEET S4.13

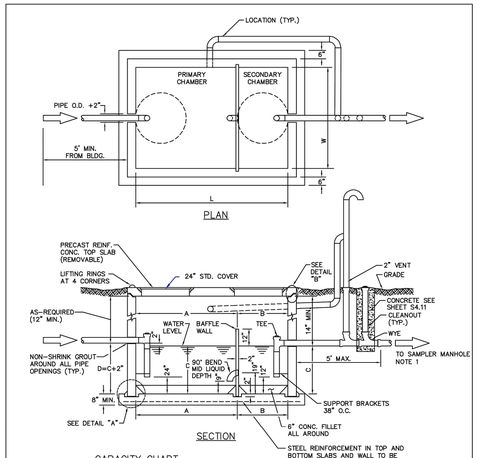

CAPACITY CHART

TOTAL WATER CAP. APPROX. (GALLONS)	GREASE CAP. APPROX. (CU. FT.)	DIMENSIONS (INCHES) W	L	A	B	C	D
1190	61	72	96	64	32	40	42
1600	84	72	144	96	48	40	42
1840	103	72	144	96	48	46	48
2080	117	72	144	96	48	52	54
2560	150	72	144	96	48	64	68
3040	183	72	144	96	48	76	78
3280	202	72	144	96	48	82	84
3520	216	72	144	96	48	88	90

1. SAMPLE MANHOLE SHALL BE LESS THAN 20 FEET FROM CLEANOUT.

TOP OF VAULT BELOW FINISHED GRADE OR AT GRADE. IF BELOW GRADE, RING AND COVER SHALL BE ADJUSTED TO FINAL GRADE USING A MINIMUM OF 4" GRADE RING(S) AND A MAXIMUM OF 12" GRADE RING(S). FOR DEPTHS OVER 12" A MAN HOLE BARREL SECTION WILL BE REQUIRED, WITH A FLAT TOP FOR DEPTHS OF 4' OR LESS AND AN ECCENTRIC CONE TOP FOR DEPTHS GREATER THAN 4'

PARKER WATER & SANITATION DISTRICT

COMMERCIAL GREASE INTERCEPTOR

SHEET 1 OF 2

SCALE: NONE	DATE: 2/96
APPROVED: PVR	2/00 01/02 01/18 10/16
DIRECTOR OF ENGINEERING	

2016 REVISION — SHEET S5.1

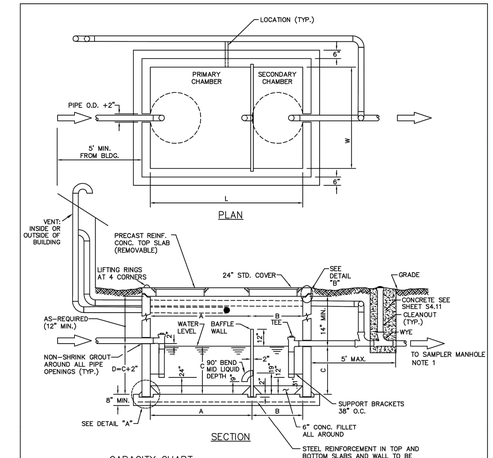

CAPACITY CHART

TOTAL WATER CAP. APPROX. (GALLONS)	GREASE CAP. APPROX. (CU. FT.)	DIMENSIONS (INCHES) W	L	A	B	C	D
1190	61	72	96	64	32	40	42
1600	84	72	144	96	48	40	42
1840	103	72	144	96	48	46	48
2080	117	72	144	96	48	52	54
2560	150	72	144	96	48	64	68
3040	183	72	144	96	48	76	78
3280	202	72	144	96	48	82	84
3520	216	72	144	96	48	88	90

1. SAMPLE MANHOLE SHALL BE LESS THAN 20 FEET FROM CLEANOUT.

TOP OF VAULT BELOW FINISHED GRADE OR AT GRADE. IF BELOW GRADE, RING AND COVER SHALL BE ADJUSTED TO FINAL GRADE USING A MINIMUM OF 4" GRADE RING(S) AND A MAXIMUM OF 12" GRADE RING(S). FOR DEPTHS OVER 12" A MAN HOLE BARREL SECTION WILL BE REQUIRED, WITH A FLAT TOP FOR DEPTHS OF 4' OR LESS AND AN ECCENTRIC CONE TOP FOR DEPTHS GREATER THAN 4'

PARKER WATER & SANITATION DISTRICT

COMMERCIAL GREASE INTERCEPTOR

SHEET 2 OF 2

SCALE: NONE	DATE: 2/96
APPROVED: PVR	01/02 01/16 10/16
DIRECTOR OF ENGINEERING	

2016 REVISION — SHEET S5.2

811 Know what's below. Call before you dig.

REV	DATE	DESCRIPTION	BY

Kimley»Horn

PREPARED BY:

PREPARED FOR: McDonald's USA, LLC ©

These drawings and specifications are the confidential and proprietary property of McDonald's USA, LLC and shall not be copied or reproduced without written authorization. The contract documents were prepared for use on this specific site in conjunction with the issue date and are not suitable for reuse on another project. Modification of these drawings for reference or example on another project requires the services of properly licensed architects and engineers. Reproduction of the contract documents for reuse on another project is not authorized.

DRAWN BY: JJM — STD ISSUE DATE
REVIEWED BY: JRH — DATE ISSUED: 7/6/2022

TITLE: UTILITY PLANS

DESCRIPTION: PWSD DETAILS

SITE ID: 91585

SITE ADDRESS: NEAR SEC PARKER ROAD AND STROH ROAD, PARKER CO

C2.4