SITE PLAN SUBMITTAL

HARVIE OPEN SPACE PARK

Situated in the North 1/2 & Northeast 1/4 of Section 24,
Township 6 South, Range 66 West of the 6th P.M.
Town of Parker, County of Douglas
State of Colorado.

20120 EAST MAINSTREET
PARKER, COLORADO

PROJECT COORDINATES

PROJECT COORDINATES ARE MODIFIED COLORADO STATE PLANE CENTRAL ZONE 83(2011) COORDINATES. PROJECT COORDINATES ARE DERIVED FROM STATE PLANE COORDINATES USING THE FOLLOWING FORMULAS:
PROJECT NORTHING = (STATE PLANE NORTHING * 1.0003179891) – 1000000.03'
PROJECT EASTING = (STATE PLANE EASTING * 1.0003179891) – 3000000.03'

PROJECT BENCHMARK

LOCATED BENCHMARK: DOUGLASS COUNTY GIS CONTROL POINT 1.090035 BEING A 3 ¼" ALUMINUM CAP LOCATED NEAR THE NORTHEAST CORNER OF THE PARKER CROSSROADS STRIP MALL AT THE INTERSECTION OF S. CROSSROADS DRIVE AND SOUTH PARKER ROAD. MONUMENT IS 4.3 FEET EAST OF THE NORTHERNMOST PARKING SPOT AT THE NORTHEAST CORNER OF THE TREADS BICYCLE SHOP. ELEVATION = 5883.72' (NAVD88)

CONSERVATION EASEMENT

THIS PARCEL OF LAND IS RESTRICTED BY A CONSERVATION EASEMENT. ALL MANDATES AND REGULATIONS STATED WITHIN THE CONSERVATION EASEMENT DOCUMENT SHALL TAKE PRECEDENCE OVER THESE PLANS.

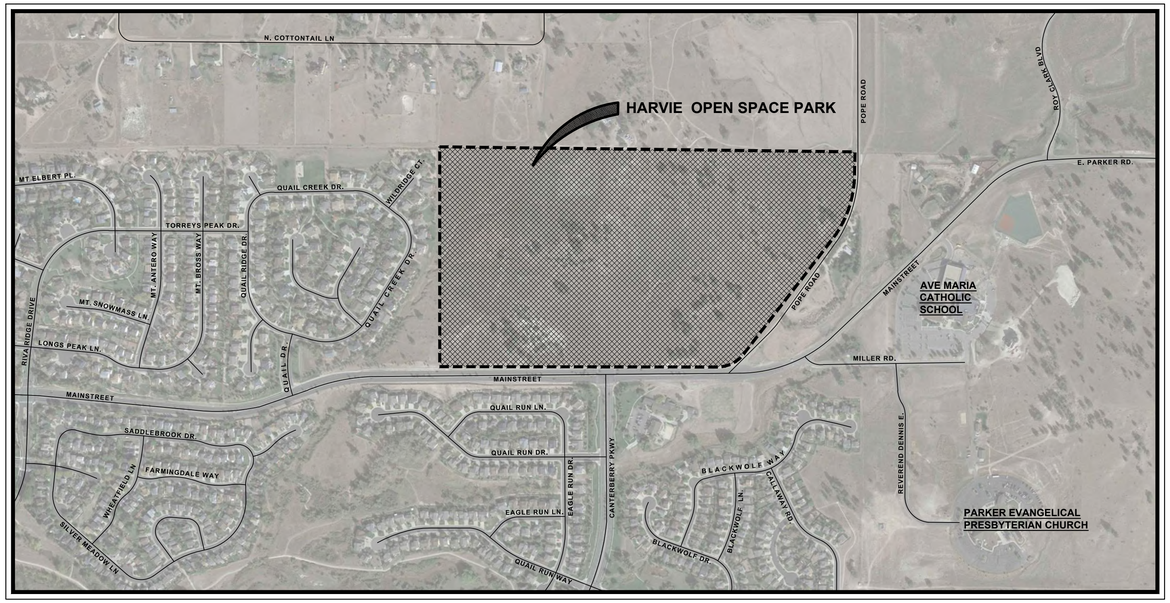

VICINITY MAP

SCALE: NTS

SHEET INDEX

	COVER SHEET
SP1.0	OVERALL SITE PLAN
L1.0	EXISTING CONDITIONS & DEMOLITION PLAN
L2.0–L2.8	LAYOUT & MATERIALS PLAN
L3.0–L3.3	ENLARGEMENT PLAN
L6.0–L6.9	SITE DETAILS
SG1.0–SG1.2	SIGNAGE PLAN & DETAILS
CIVIL ENGINEERING PLANS:	
C1.0–C1.13	TRAIL PLAN & PROFILE
C1.14	NATURALIZED CROSSING DETAILS
C2.0–C2.1	BMP PLANS & DETAILS
C3.0	STORM LATERAL
D1.0	DRAINAGE BASIN MAP
IRRIGATION PLANS:	
IR1–IR4	IRRIGATION PLANS & DETAILS
ELECTRICAL ENGINEERING PLANS:	
E0.1	ELECTRICAL COVER SHEET
ES1.1	SITE PLAN & DETAILS
EP1.0	SITE PHOTOMETRIC PLAN
STRUCTURAL ENGINEERING PLANS:	
S1.0	GENERAL STRUCTURAL NOTES
S2.0	SHADE STRUCTURE FOUNDATION PLANS
S3.0	SHADE STRUCTURE ROOF FRAMING PLANS
S4.0	SHADE STRUCTURE STRUCTURAL SECTIONS & DETAILS

PARKER
COLORADO

PREPARED FOR

TOWN OF PARKER
PARKS AND RECREATION DEPARTMENT
CONTACT:
BRETT COLLINS, PLA
PARK PROJECT MANAGER
20120 E. MAINSTREET
PARKER, CO. 80134
303.805.3276

PROJECT TEAM

LANDSCAPE ARCHITECT
DHM DESIGN CORPORATION
900 SOUTH BROADWAY, SUITE 300
DENVER, CO 80209
PHONE: 303–892–5566
CONTACT: MATTHEW WHIPPLE

CIVIL ENGINEER
WESTWOOD ENGINEERING
10333 E. DRY CREEK RD., SUITE 240
ENGLEWOOD, CO 80112
PHONE: 720–482–9526
CONTACT: JIM JANNICKE

ELECTRICAL ENGINEER
JCAA ENGINEERING
4100 WADSWORTH BLVD.
WHEAT RIDGE, CO 80033
PHONE: 303–985–3260
CONTACT: FRANK DAVENPORT

IRRIGATION DESIGNER
HYDROSYSTEMS KDI
13949 WEST COLFAX AVE., ST 260
LAKEWOOD, CO. 80401
PHONE: 303–980–5327
CONTACT: JILL BERSANO

STRUCTURAL ENGINEER
SAN ENGINEERING, L.L.C.
1150 W. LITTLETON BLVD, SUITE 200
LITTLETON, CO 80120
PHONE: 303–953–9014
CONTACT: JOHN MIGLIACCIO

DHM DESIGN
900 S. Broadway
Suite 300
Denver, CO 80209
303.892.5566
www.dhmdesign.com

DATE: 07.19.2022

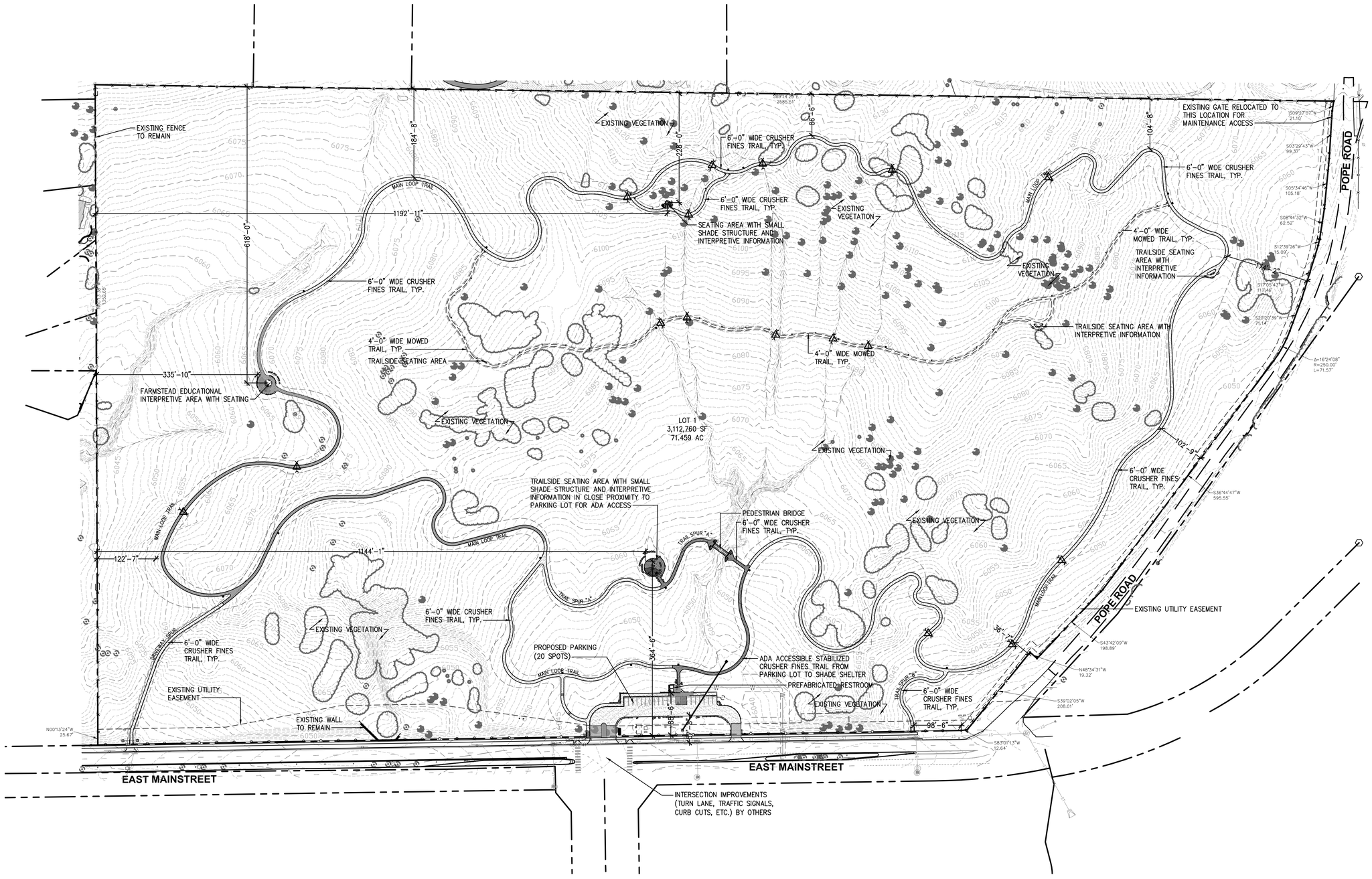

LEGEND

- EXISTING FENCING (TO REMAIN)
- EXISTING GRAVEL
- EXISTING STORM DRAIN
- EXISTING STORM INLET
- EXISTING STORM FES
- EXISTING STORM MANHOLE
- EXISTING ELECTRIC POLE
- EXISTING LIGHT POLE
- EXISTING WELL
- EXISTING POLE
- EXISTING SIGN
- EASEMENT LINE
- PROPERTY LINE
- TOPO MAJOR
- TOPO MINOR
- EXISTING DRAINAGE DITCH
- PROPOSED STONE WATER CROSSING
- CONCRETE
- NATIVE SEED IN AREAS OF DISTURBANCE
- 6'-0" WIDE CRUSHER FINES TRAIL
- 6'-0" WIDE CRUSHER FINES TRAIL – STABILIZED
- 4'-0" WIDE MOWED TRAIL
- EXISTING EVERGREEN TREE
- EXISTING DECIDUOUS TREE
- EXISTING VEGETATION

PROJECT SUMMARY

USES RESTRICTED BY CONSERVATION EASEMENT

OVERALL SITE SIZE: 71.46 AC
PARKING STALLS: 20 STALLS
PARKING LOT SIZE: 11,293 SF
STRUCTURES: 4
- 3 SHADE STRUCTURES
- 1 RESTROOM (PREFABRICATED)
- PEDESTRIAN BRIDGE: 1

OVERALL AREA OF DISTURBANCE: 5.12 AC

RE-SEEDING AREA: 5.3 ACRES
LENGTH OF TRAILS:
- MAIN LOOP TRAIL: 8,020 LF (1.5 MILES)
- TRAIL SPUR "A": 603 LF
- TRAIL SPUR "B": 209 LF
- "DRIVEWAY" SPUR: 457 LF (OVER EXISTING DRIVEWAY)
- 4'-0" SOFT SURFACE TRAIL: 1904 LF
- COMBINED LENGTH OF ALL TRAILS: 2.1 MILES

NORTH

0 25 50 100 200
SCALE 1"=100'-0"

Know what's below. Call before you dig.

DHM DESIGN
900 S. Broadway
Suite 300
Denver, CO 80209
303.892.5566
www.dhmdesign.com

REUSE OF DOCUMENT
This document is the property of DHM Design Corp. The ideas and design incorporated on this document is an instrument of professional service and shall not be used for any other project without written authorization of DHM Design Corp.

HARVIE OPEN SPACE PARK

SITE PLAN SUBMITTAL

20120 East Main Street, Parker, CO 80138

PROJECT NUMBER: 17279.00
DATE: 07.19.2022
DESIGNED: MTW
DRAWN: MTW
CHECKED: MTW

REVISIONS:

JOB DESCRIPTION: SITE PLAN SUBMITTAL

SHEET TITLE: OVERALL SITE PLAN

SCALE: 1"=100'-0"

SHEET NUMBER: SP1.0

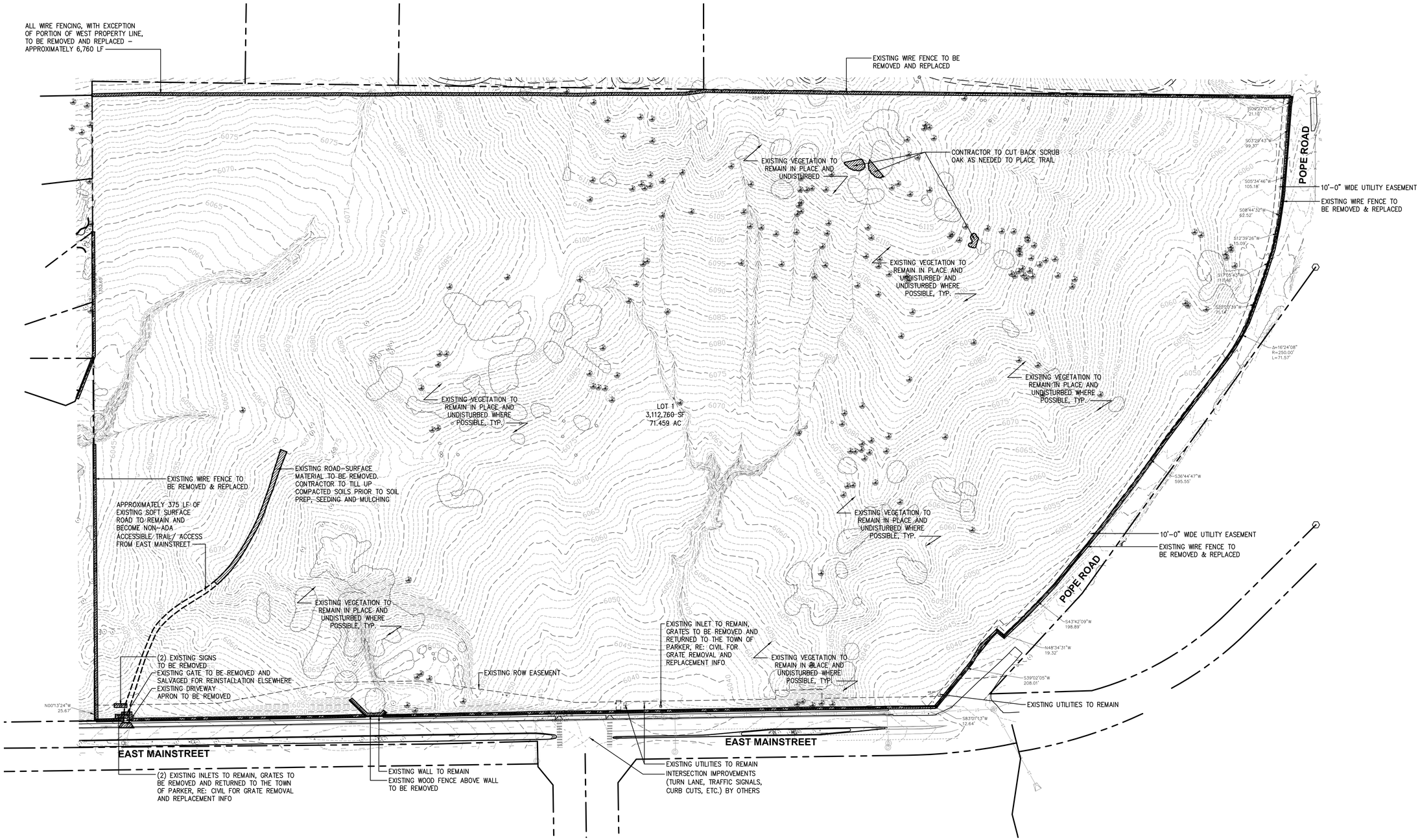

DEMOLITION NOTES:

1. THE LOCATION OF THE EXISTING UTILITIES AS SHOWN ON THE PLAN MAY VARY FROM THE ACTUAL CONDITIONS; ADDITIONAL UTILITIES NOT SHOWN ON PLANS MAY ALSO EXIST. FIELD VERIFY ALL UTILITIES AND BRING ANY DISCREPANCIES TO THE ATTENTION OF THE OWNER AND LANDSCAPE ARCHITECT.
2. THE CONTRACTOR SHALL BE RESPONSIBLE FOR THE REPAIR OF ANY DAMAGE TO EXISTING UTILITIES, WALKWAYS OR OTHER EXISTING STRUCTURES AND FEATURES TO REMAIN THAT IS A RESULT OF THEIR WORK. THE REPAIR OF SUCH DAMAGE WILL BE AT NO ADDITIONAL COST TO THE OWNER. DOCUMENT AND BRING TO THE ATTENTION OF OWNER AND LANDSCAPE ARCHITECT ALL EXISTING DAMAGES PRIOR TO BEGINNING WORK. ANY DAMAGES NOT DOCUMENTED AND BROUGHT TO THE ATTENTION OF THE OWNER AND LANDSCAPE ARCHITECT SHALL BE REPAIRED AT THE CONTRACTOR'S EXPENSE.
3. THE EXISTING CONDITIONS PLAN INDICATES THE APPROXIMATE LOCATIONS OF WORK ITEMS WHICH WILL BE REQUIRED AS PART OF THIS CONTRACT. IT IS THE RESPONSIBILITY OF THE CONTRACTOR TO FAMILIARIZE THEMSELVES WITH THE EXISTING SITE CONDITIONS.
4. ANY ITEMS ENCOUNTERED THAT ARE NOT SHOWN ON THE PLAN SHALL BE BROUGHT TO THE ATTENTION OF THE OWNER AND THE LANDSCAPE ARCHITECT IMMEDIATELY.
5. ALL EQUIPMENT AND MATERIALS TO BE REMOVED MUST BE DISPOSED OF OFFSITE UNLESS OTHERWISE NOTED AT NO ADDITIONAL COST TO OWNER.
6. WITH THE EXCEPTION OF TREES TO BE REMOVED AT INTERSECTION (BY OTHERS), ALL TREES AND OTHER WOODY VEGETATION IS TO REMAIN AND MUST HAVE TREE PROTECTION WHEN WORKING IN IMMEDIATE AREA. TREE PROTECTION TO EXTEND TO DRIP–LINE OF TREE CANOPIES WHERE POSSIBLE. IF ANY PORTION OF THE PROPOSED WORK IS EXPECTED TO CAUSE DAMAGE TO EXISTING TREES AND WOODY VEGETATION, THE CONTRACTOR SHALL BRING IT TO THE ATTENTION OF THE LANDSCAPE ARCHITECT.
7. ALL SURVEY INFORMATION PROVIDED BY TOWN OF PARKER TO DHM DESIGN.
8. CONTRACTOR IS REQUIRED TO PLACE ORANGE CONSTRUCTION FENCING AROUND OPEN AREAS OF EXISTING NATIVE SEED WHEN WORKING IN THE IMMEDIATE AREA IN AN EFFORT TO REDUCE DISTURBANCE OF THE EXISTING SITE AS MUCH AS POSSIBLE.
9. EXISTING PERIMETER FENCING: ALL PERIMETER FENCE, WITH EXCEPTION OF PORTION OF FENCING ALONG WEST PROPERTY LINE, TO BE REMOVED AND REPLACED. ANY FENCING, OR ASSOCIATED CONSTRUCTION THAT IS BEING ADJUSTED OR NEWLY CONSTRUCTED, SHALL BE INSTALLED WITHIN THE SITE PROPERTY LINES, REGARDLESS OF ITS EXISTING LOCATION, BUT SHALL TIE BACK INTO EXISTING FENCING.

LEGEND

- EXISTING FENCING
- EXISTING GRAVEL
- EXISTING STORM DRAIN
- EXISTING STORM INLET
- EXISTING STORM FES
- EXISTING STORM MANHOLE
- EXISTING ELECTRIC POLE
- EXISTING LIGHT POLE
- EXISTING WELL
- EXISTING POLE
- EXISTING SIGN
- EASEMENT LINE
- PROPERTY LINE
- TOPO MAJOR
- TOPO MINOR
- EXISTING DRAINAGE DITCH
- EXISTING EVERGREEN TREE
- EXISTING DECIDUOUS TREE
- EXISTING VEGETATION

NORTH

0 25 50 100 200

SCALE 1"=100'–0"

811 Know what's below. Call before you dig.

DHM DESIGN
900 S. Broadway
Suite 300
Denver, CO 80209
303.892.5566
www.dhmdesign.com

REUSE OF DOCUMENT
This document is the property of DHM Design Corp. The ideas and design incorporated on this document is an instrument of professional service and shall not be used for any other project without written authorization of DHM Design Corp.

HARVIE OPEN SPACE PARK

SITE PLAN SUBMITTAL

20120 East Main Street, Parker, CO 80138

PROJECT NUMBER: 17279.00
DATE: 07.19.2022
DESIGNED: MTW
DRAWN: MTW
CHECKED: MTW

REVISIONS:

JOB DESCRIPTION: SITE PLAN SUBMITTAL

SHEET TITLE: EXISTING CONDITIONS & DEMOLITION PLAN

SCALE: 1"=100'–0"

SHEET NUMBER: L1.0

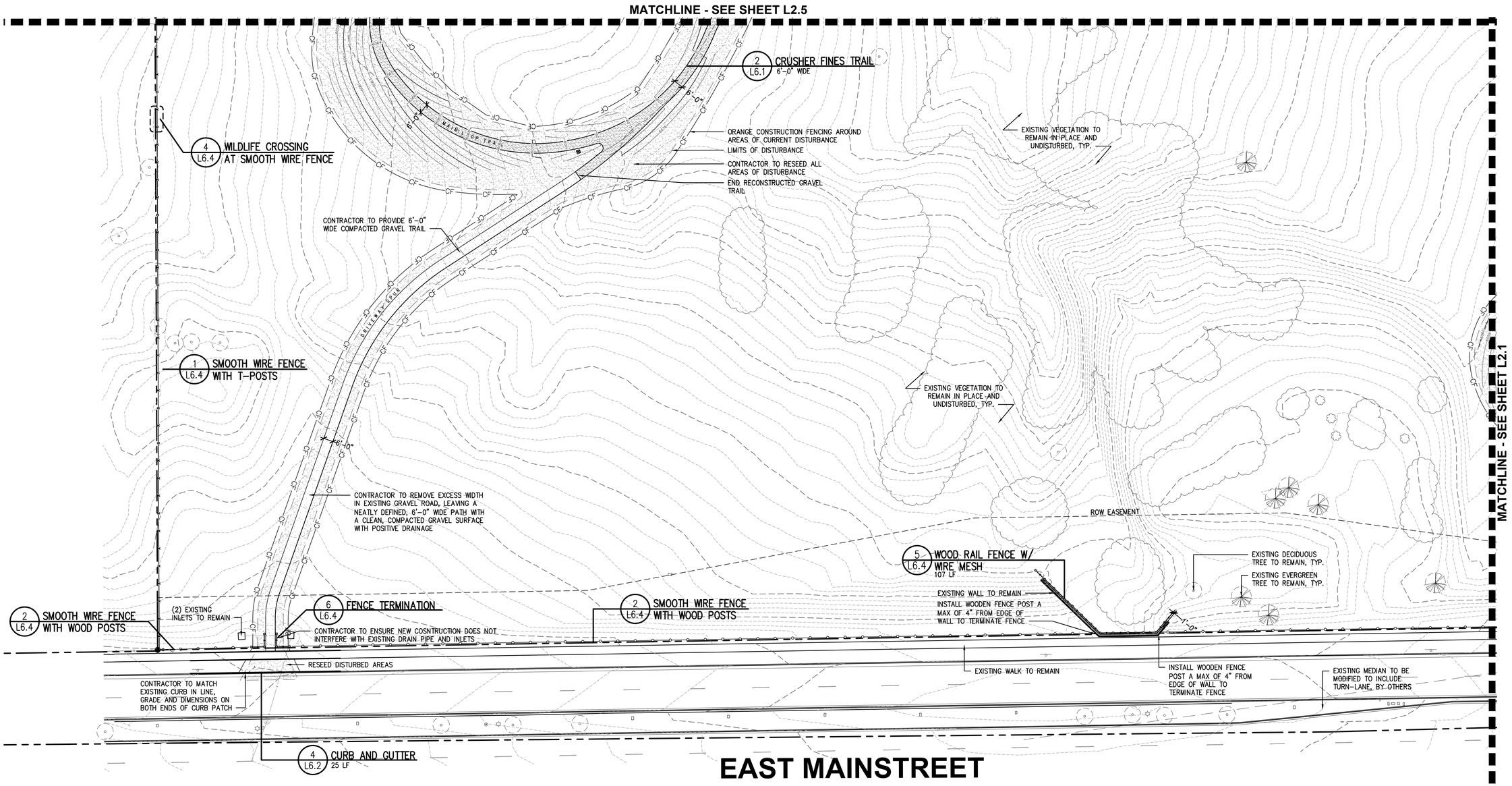

MATERIALS PLAN NOTES:

1. THE CONTRACTOR SHALL BE RESPONSIBLE FOR ALL STAKING BOTH LINE AND GRADE. ANY DISCREPANCIES, ERRORS OR OMISSIONS ON THE CONSTRUCTION DRAWINGS SHALL BE BROUGHT TO THE ATTENTION OF THE LANDSCAPE ARCHITECT IMMEDIATELY PRIOR TO MOVING FORWARD WITH ANY WORK. FAILURE TO IMMEDIATELY NOTIFY THE OWNER AND LANDSCAPE ARCHITECT WILL RESULT IN THE CONTRACTOR TAKING FULL RESPONSIBILITY FOR ADJUSTMENTS TO THE DESIGN, AT NO ADDITIONAL COST TO THE OWNER.
2. CONTRACTOR TO CAREFULLY STRIP & STOCKPILE TOPSOIL IN AREAS OF DISTURBANCE PRIOR TO PROCEEDING WITH GRADING AND CONSTRUCTION TO ENSURE MINIMAL IMPACT TO AREAS BEYOND LIMITS OF DISTURBANCE
3. REFER TO SITE SURVEY FOR ADDITIONAL INFORMATION. CONTRACTOR TO FIELD VERIFY EXISTING CONDITIONS PRIOR TO BIDDING OR PERFORMING ANY CONSTRUCTION OPERATIONS. SURVEY PROVIDED BY THE TOWN OF PARKER TO DHM DESIGN.
4. IT IS ASSUMED THAT UNDERGROUND UTILITIES EXIST ON SITE THAT ARE NOT SHOWN ON THE SURVEY. CONTRACTOR TO LOCATE UTILITIES PRIOR TO BEGINNING ANY WORK BELOW EXISTING GRADE, AND IF NECESSARY, ADJUST UTILITIES IN ORDER TO ACCOMMODATE PROPOSED IMPROVEMENTS THAT ARE A PART OF THIS PROJECT. CONTRACTOR TO COORDINATE WITH UTILITY SERVICE PROVIDERS, AND PROVIDE PRIOR NOTIFICATION WHEN WORK IS OCCURRING THAT MAY IMPACT THEIR SERVICE LINES.
5. PROVIDE SLOPE AWAY FROM THE BUILDING STRUCTURES AS INDICATED ON DRAWINGS. ¼" PER 1 FOOT MINIMUM.
6. CONTRACTOR TO REPAIR ANY ASPHALT, CONCRETE AND OTHER SITE FEATURES DAMAGED DURING CONSTRUCTION AT NO ADDITIONAL COST TO OWNER.
7. CONTRACTOR SHALL BE RESPONSIBLE FOR OBTAINING ANY PERMITS OR LICENSES REQUIRED FOR THE PERFORMANCE OF THE WORK AS APPLICABLE TO THIS PROJECT.
8. ADDITIONAL LAYOUT INFORMATION WILL BE PROVIDED TO THE SELECTED CONTRACTOR PRIOR TO CONSTRUCTION AS NEEDED. ELECTRONIC FILES MAY ALSO BE OBTAINED BY THE CONTRACTOR FOR LAYOUT PURPOSES
9. DUE TO SCALE OF DRAWINGS, NOT ALL CONDITIONS/ITEMS CARRY A DETAIL CALLOUT ON THE PLAN. THIS DOES NOT EXCLUDE THIS CONDITION/ITEM FROM THE PROJECT OR RESULT IN ADDITIONAL CHARGES TO THE OWNER
10. CONSTRUCTION FENCING: CONTRACTOR IS REQUIRED TO INSTALL CONSTRUCTION FENCING AROUND EXISTING AREAS THAT ARE TO REMAIN UNDISTURBED WHEN WORKING IN THE IMMEDIATE AREA. CONTRACTOR WILL BE REQUIRED TO FULLY REHABILITATE SOIL AND VEGETATION OF ALL AREAS THAT ARE DISTURBED AS A PART OF THEIR WORK, WITH NO EXCEPTIONS. ANY TREES THAT ARE DAMAGED OR REMOVED WITHOUT THE WRITTEN APPROVAL OF THE OWNER AND LANDSCAPE ARCHITECT SHALL BE REPLACED IN-KIND OR BETTER, TO THE SATISFACTION OF THE TOWN OF PARKER.
11. EXISTING PERIMETER FENCING: ALL PERIMETER FENCE, WITH EXCEPTION OF PORTION OF FENCING ALONG WEST PROPERTY LINE, TO BE REMOVED AND REPLACED. ANY FENCING, OR ASSOCIATED CONSTRUCTION THAT IS BEING ADJUSTED OR NEWLY CONSTRUCTED, SHALL BE INSTALLED WITHIN THE SITE PROPERTY LINES, REGARDLESS OF ITS EXISTING LOCATION, BUT SHALL TIE BACK INTO EXISTING FENCING.

LEGEND

- EXISTING FENCING
- EXISTING GRAVEL
- EXISTING STORM DRAIN
- EXISTING STORM INLET
- EXISTING STORM FES
- EXISTING STORM MANHOLE
- EXISTING ELECTRIC POLE
- EXISTING LIGHT POLE
- EXISTING WELL
- EXISTING POLE
- EXISTING SIGN
- EASEMENT LINE
- PROPERTY LINE
- TOPO MAJOR
- TOPO MINOR
- ORANGE CONSTRUCTION FENCING AROUND ALL AREAS OF DISTURBANCE
- LIMITS OF DISTURBANCE
- EXISTING DRAINAGE DITCH
- VEGETATED SWALE
- PROPOSED SMOOTH WIRE FENCE
- PROPOSED THREE RAIL FENCE
- 6'-0" WIDE STABILIZED CRUSHER FINES TRAIL
- 6'-0" WIDE CRUSHER FINES TRAIL
- 4'-0" MOWED TRAIL
- CONCRETE
- NATIVE SEED IN AREAS OF DISTURBANCE
- EXISTING EVERGREEN TREE
- EXISTING DECIDUOUS TREE
- EXISTING VEGETATION
- WAYFINDING MARKER
- TRAIL MARKER

KEYMAP

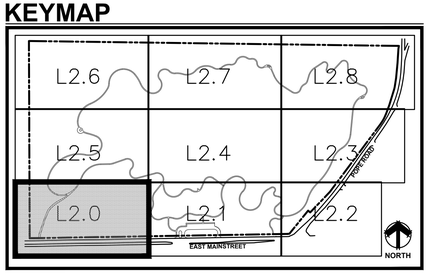

NORTH

0 15 30 60
SCALE 1"=30'-0"

811 Know what's below. Call before you dig.

DHM DESIGN
900 S. Broadway
Suite 300
Denver, CO 80209
303.892.5566
www.dhmdesign.com

REUSE OF DOCUMENT
This document is the property of DHM Design Corp. The ideas and design incorporated on this document is an instrument of professional service and shall not be used for any other project without written authorization of DHM Design Corp.

HARVIE OPEN SPACE PARK

SITE PLAN SUBMITTAL

20120 East Main Street, Parker, CO 80138

PROJECT NUMBER: 17279.00
DATE: 07.19.2022
DESIGNED: MTW
DRAWN: MTW
CHECKED: MTW

REVISIONS:

JOB DESCRIPTION: SITE PLAN SUBMITTAL

SHEET TITLE: MATERIALS & LAYOUT PLAN

SCALE: 1"=30'-0"

SHEET NUMBER: L2.0

MATCHLINE - SEE SHEET L2.4

MATCHLINE - SEE SHEET L2.0

MATCHLINE - SEE SHEET L2.2

3 L3.1 LOWER SHADE SHELTER AREA ENLARGEMENT

THIS SECTION OF TRAIL STABILIZED CRUSHER FINES FROM PARKING LOT TO SHADE SHELTER

2 L6.1 CRUSHER FINES TRAIL 6'-0" WIDE

2 L6.1 CRUSHER FINES TRAIL 6'-0" WIDE

1 L3.2 PARKING LOT ENLARGEMENT

THIS SECTION OF TRAIL STABILIZED CRUSHER FINES FROM PARKING LOT TO SHADE SHELTER

EXISTING VEGETATION TO REMAIN IN PLACE AND UNDISTURBED WHERE POSSIBLE

2 L6.1 CRUSHER FINES TRAIL 6'-0" WIDE

9 L6.1 DRAINAGE PIPE UNDER TRAIL

LIMITS OF DISTURBANCE
ORANGE CONSTRUCTION FENCING AROUND AREAS OF CURRENT DISTURBANCE

2 L6.1 CRUSHER FINES TRAIL 6'-0" WIDE

THIS SECTION OF TRAIL STABILIZED CRUSHER FINES FROM PARKING LOT TO SHADE SHELTER

DRAIN INLET, RE: CIVIL
DRAIN PIPE, RE: CIVIL

ORANGE CONSTRUCTION FENCING AROUND AREAS OF CURRENT DISTURBANCE
LIMITS OF DISTURBANCE
CONTRACTOR TO RESEED ALL AREAS OF DISTURBANCE

CONTRACTOR TO RESEED ALL AREAS OF DISTURBANCE

2 L6.1 CRUSHER FINES TRAIL 6'-0" WIDE

1 L3.2 PARKING LOT ENLARGEMENT

1 L3.3 RESTROOM AREA ENLARGEMENT

EXISTING EVERGREEN TREE TO REMAIN, TYP.

2 L6.1 CRUSHER FINES TRAIL 6'-0" WIDE

RE: PARKING LOT ENLARGEMENT FOR ALL PLANTING IMPROVEMENTS

EXISTING VEGETATION TO REMAIN IN PLACE AND UNDISTURBED, TYP.

2 L6.1 CRUSHER FINES TRAIL 6'-0" WIDE

ROW EASEMENT

6 L6.4 FENCE TERMINATION

ROW EASEMENT

ROW EASEMENT

RE: CIVIL FOR STORM DRAIN CONNECTION

EXISTING EVERGREEN TREES TO REMAIN, TYP.

RE: IRRIGATION FOR WATER AND IRRIGATION CONNECTIONS

2 L6.4 SMOOTH WIRE FENCE WITH WOOD POSTS

6 L6.4 FENCE TERMINATION

INTERSECTION IMPROVEMENTS (TURN LANE, TRAFFIC SIGNAL, CURB CUTS, ETC.) BY OTHERS

EXISTING MEDIAN TO BE MODIFIED TO INCLUDE TURN-LANE, BY OTHERS

EXISTING MEDIAN TO BE MODIFIED TO INCLUDE TURN-LANE, BY OTHERS

EAST MAINSTREET

LEGEND

- EXISTING FENCING
- EXISTING GRAVEL
- EXISTING STORM DRAIN
- EXISTING STORM INLET
- EXISTING STORM FES
- EXISTING STORM MANHOLE
- EXISTING ELECTRIC POLE
- EXISTING LIGHT POLE
- EXISTING WELL
- EXISTING POLE
- EXISTING SIGN
- EASEMENT LINE
- PROPERTY LINE
- TOPO MAJOR
- TOPO MINOR
- ORANGE CONSTRUCTION FENCING AROUND ALL AREAS OF DISTURBANCE
- LIMITS OF DISTURBANCE
- EXISTING DRAINAGE DITCH
- VEGETATED SWALE
- PROPOSED SMOOTH WIRE FENCE
- PROPOSED THREE RAIL FENCE
- 6'-0" WIDE STABILIZED CRUSHER FINES TRAIL
- 6'-0" WIDE CRUSHER FINES TRAIL
- 4'-0" MOWED TRAIL
- CONCRETE
- NATIVE SEED IN AREAS OF DISTURBANCE
- EXISTING EVERGREEN TREE
- EXISTING DECIDUOUS TREE
- EXISTING VEGETATION
- WAYFINDING MARKER
- TRAIL MARKER

KEYMAP

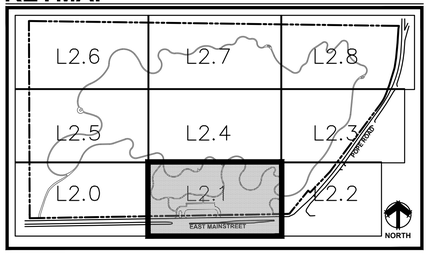

NORTH

0 15 30 60
SCALE 1"=30'-0"

811 Know what's below. Call before you dig.

DHM DESIGN
900 S. Broadway
Suite 300
Denver, CO 80209
303.892.5566
www.dhmdesign.com

REUSE OF DOCUMENT
This document is the property of DHM Design Corp. The ideas and design incorporated on this document is an instrument of professional service and shall not be used for any other project without written authorization of DHM Design Corp.

HARVIE OPEN SPACE PARK

SITE PLAN SUBMITTAL

20120 East Main Street, Parker, CO 80138

PROJECT NUMBER: 17279.00
DATE: 07.19.2022
DESIGNED: MTW
DRAWN: MTW
CHECKED: MTW

REVISIONS:

JOB DESCRIPTION: SITE PLAN SUBMITTAL

SHEET TITLE: MATERIALS & LAYOUT PLAN

SCALE: 1"=30'-0"

SHEET NUMBER: L2.1

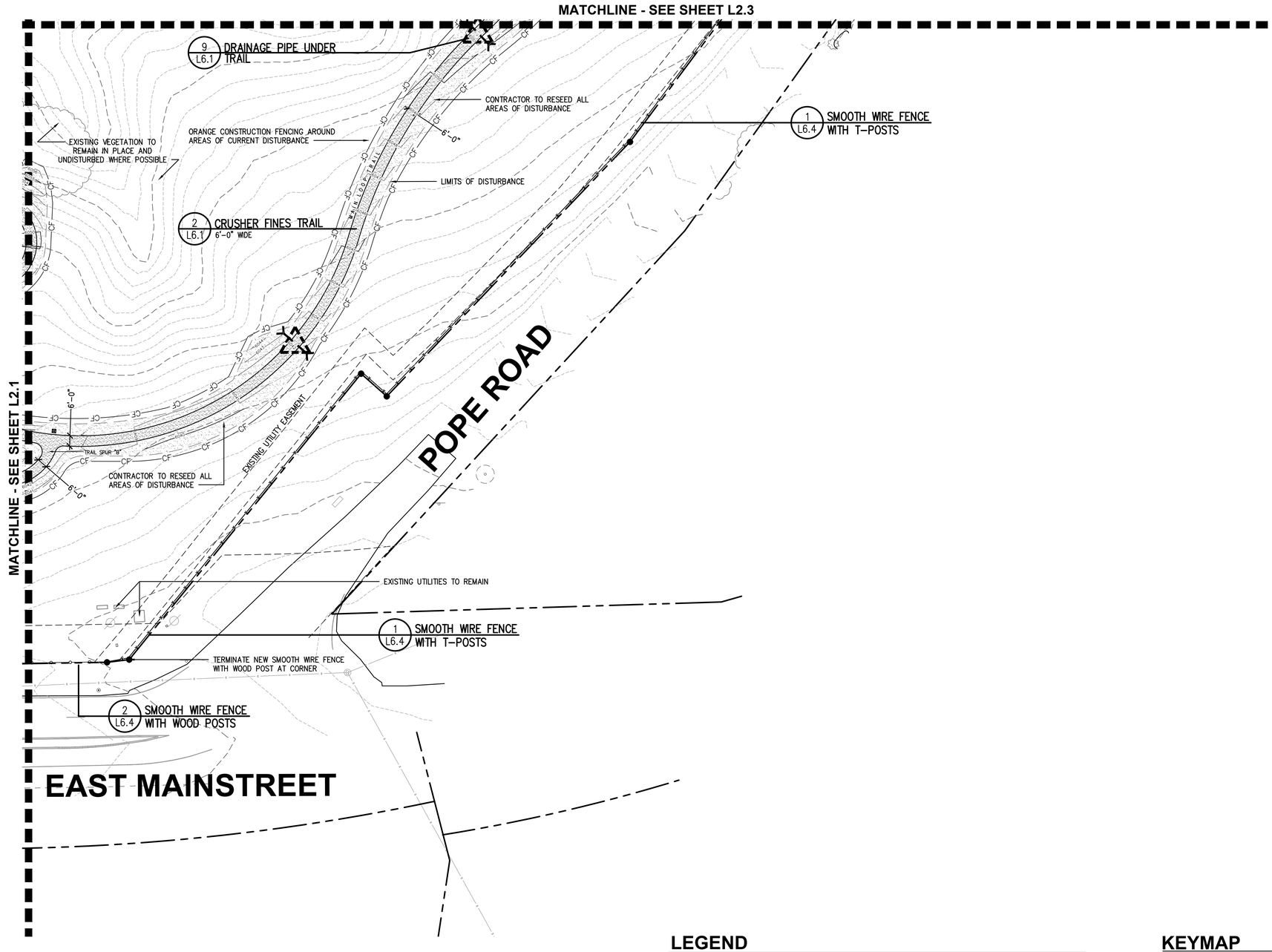

LEGEND

- EXISTING FENCING
- EXISTING GRAVEL
- EXISTING STORM DRAIN
- EXISTING STORM INLET
- EXISTING STORM FES
- EXISTING STORM MANHOLE
- EXISTING ELECTRIC POLE
- EXISTING LIGHT POLE
- EXISTING WELL
- EXISTING POLE
- EXISTING SIGN
- EASEMENT LINE
- PROPERTY LINE
- TOPO MAJOR
- TOPO MINOR
- ORANGE CONSTRUCTION FENCING AROUND ALL AREAS OF DISTURBANCE
- LIMITS OF DISTURBANCE
- EXISTING DRAINAGE DITCH
- VEGETATED SWALE
- PROPOSED SMOOTH WIRE FENCE
- PROPOSED THREE RAIL FENCE
- 6'-0" WIDE STABILIZED CRUSHER FINES TRAIL
- 6'-0" WIDE CRUSHER FINES TRAIL
- 4'-0" MOWED TRAIL
- CONCRETE
- NATIVE SEED IN AREAS OF DISTURBANCE
- EXISTING EVERGREEN TREE
- EXISTING DECIDUOUS TREE
- EXISTING VEGETATION
- WAYFINDING MARKER
- TRAIL MARKER

KEYMAP

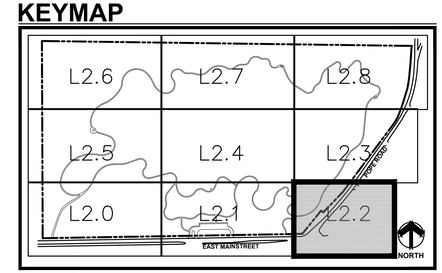

NORTH

0 15 30 60
SCALE 1"=30'-0"

811 Know what's below. Call before you dig.

DHM DESIGN
900 S. Broadway
Suite 300
Denver, CO 80209
303.892.5566
www.dhmdesign.com

REUSE OF DOCUMENT
This document is the property of DHM Design Corp. The ideas and design incorporated on this document is an instrument of professional service and shall not be used for any other project without written authorization of DHM Design Corp.

HARVIE OPEN SPACE PARK

SITE PLAN SUBMITTAL

20120 East Main Street, Parker, CO 80138

PROJECT NUMBER: 17279.00
DATE: 07.19.2022
DESIGNED: MTW
DRAWN: MTW
CHECKED: MTW

REVISIONS:

JOB DESCRIPTION: SITE PLAN SUBMITTAL

SHEET TITLE: MATERIALS & LAYOUT PLAN

SCALE: 1"=30'-0"

SHEET NUMBER: L2.2

MATCHLINE - SEE SHEET L2.8

MATCHLINE - SEE SHEET L2.4

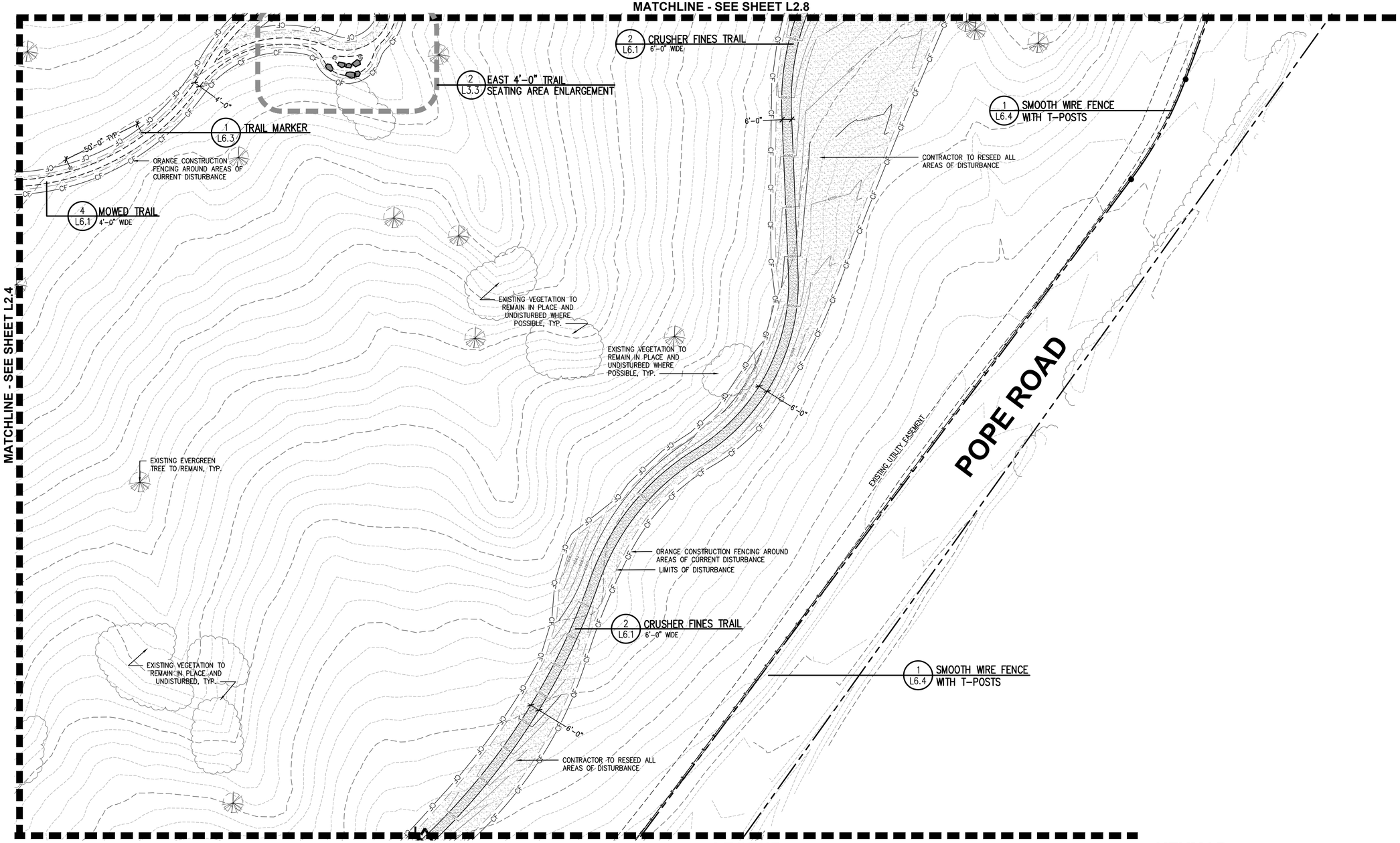

MATCHLINE - SEE SHEET L2.2

LEGEND

- EXISTING FENCING
- EXISTING GRAVEL
- EXISTING STORM DRAIN
- EXISTING STORM INLET
- EXISTING STORM FES
- EXISTING STORM MANHOLE
- EXISTING ELECTRIC POLE
- EXISTING LIGHT POLE
- EXISTING WELL
- EXISTING POLE
- EXISTING SIGN
- EASEMENT LINE
- PROPERTY LINE
- TOPO MAJOR
- TOPO MINOR
- ORANGE CONSTRUCTION FENCING AROUND ALL AREAS OF DISTURBANCE
- LIMITS OF DISTURBANCE
- EXISTING DRAINAGE DITCH
- VEGETATED SWALE
- PROPOSED SMOOTH WIRE FENCE
- PROPOSED THREE RAIL FENCE
- 6'-0" WIDE STABILIZED CRUSHER FINES TRAIL
- 6'-0" WIDE CRUSHER FINES TRAIL
- 4'-0" MOWED TRAIL
- CONCRETE
- NATIVE SEED IN AREAS OF DISTURBANCE
- EXISTING EVERGREEN TREE
- EXISTING DECIDUOUS TREE
- EXISTING VEGETATION
- WAYFINDING MARKER
- TRAIL MARKER

KEYMAP

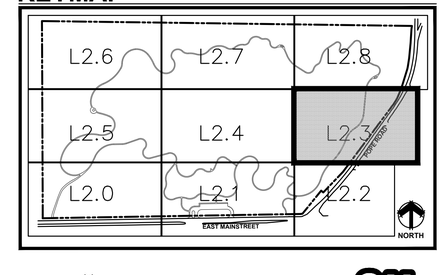

NORTH

0 15 30 60
SCALE 1"=30'-0"

811 Know what's below. Call before you dig.

DHM DESIGN
900 S. Broadway
Suite 300
Denver, CO 80209
303.892.5566
www.dhmdesign.com

REUSE OF DOCUMENT
This document is the property of DHM Design Corp. The ideas and design incorporated on this document is an instrument of professional service and shall not be used for any other project without written authorization of DHM Design Corp.

HARVIE OPEN SPACE PARK

SITE PLAN SUBMITTAL

20120 East Main Street, Parker, CO 80138

PROJECT NUMBER: 17279.00
DATE: 07.19.2022

DESIGNED: MTW
DRAWN: MTW
CHECKED: MTW

REVISIONS:

JOB DESCRIPTION: SITE PLAN SUBMITTAL

SHEET TITLE: MATERIALS & LAYOUT PLAN

SCALE: 1"=30'-0"

SHEET NUMBER: L2.3

MATCHLINE - SEE SHEET L2.7

MATCHLINE - SEE SHEET L2.5

MATCHLINE - SEE SHEET L2.3

MATCHLINE - SEE SHEET L2.1

EXISTING VEGETATION TO REMAIN IN PLACE AND UNDISTURBED WHERE POSSIBLE, TYP.

ORANGE CONSTRUCTION FENCING AROUND AREAS OF CURRENT DISTURBANCE

4'-0"

9 L6.1 DRAINAGE PIPE UNDER TRAIL

1 L6.3 TRAIL MARKER

4 L6.1 MOWED TRAIL 4'-0" WIDE

50'-0" TYP.

EXISTING VEGETATION TO REMAIN IN PLACE AND UNDISTURBED WHERE POSSIBLE, TYP.

EXISTING DRAINAGE DITCH, TYP.

EXISTING EVERGREEN TREE TO REMAIN, TYP.

EXISTING VEGETATION TO REMAIN IN PLACE AND UNDISTURBED, TYP.

EXISTING VEGETATION TO REMAIN IN PLACE AND UNDISTURBED, TYP.

CONTRACTOR TO RESEED ALL AREAS OF DISTURBANCE

ORANGE CONSTRUCTION FENCING AROUND AREAS OF CURRENT DISTURBANCE

LIMITS OF DISTURBANCE

2 L6.1 CRUSHER FINES TRAIL 6'-0" WIDE

3 L3.1 LOWER SHADE SHELTER AREA ENLARGEMENT

STABILIZED CRUSHER FINES FROM PARKING LOT TO SHADE SHELTER

2 L3.1 BRIDGE ENLARGEMENT

MAIN LOOP TRAIL

6'-0"

LEGEND

- EXISTING FENCING
- EXISTING GRAVEL
- EXISTING STORM DRAIN
- EXISTING STORM INLET
- EXISTING STORM FES
- EXISTING STORM MANHOLE
- EXISTING ELECTRIC POLE
- EXISTING LIGHT POLE
- EXISTING WELL
- EXISTING POLE
- EXISTING SIGN
- EASEMENT LINE
- PROPERTY LINE
- TOPO MAJOR
- TOPO MINOR
- ORANGE CONSTRUCTION FENCING AROUND ALL AREAS OF DISTURBANCE
- LIMITS OF DISTURBANCE
- EXISTING DRAINAGE DITCH
- VEGETATED SWALE
- PROPOSED SMOOTH WIRE FENCE
- PROPOSED THREE RAIL FENCE
- 6'-0" WIDE STABILIZED CRUSHER FINES TRAIL
- 6'-0" WIDE CRUSHER FINES TRAIL
- 4'-0" MOWED TRAIL
- CONCRETE
- NATIVE SEED IN AREAS OF DISTURBANCE
- EXISTING EVERGREEN TREE
- EXISTING DECIDUOUS TREE
- EXISTING VEGETATION
- WAYFINDING MARKER
- TRAIL MARKER

KEYMAP

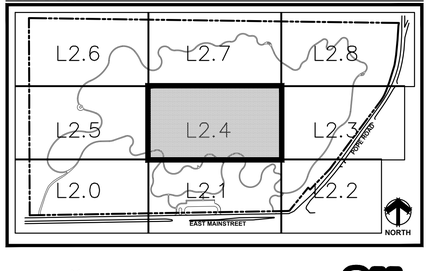

NORTH

0 15 30 60

SCALE 1"=30'-0"

Know what's below. Call before you dig.

DHM DESIGN

900 S. Broadway
Suite 300
Denver, CO 80209
303.892.5566
www.dhmdesign.com

REUSE OF DOCUMENT

This document is the property of DHM Design Corp. The ideas and design incorporated on this document is an instrument of professional service and shall not be used for any other project without written authorization of DHM Design Corp.

HARVIE OPEN SPACE PARK

SITE PLAN SUBMITTAL

20120 East Main Street, Parker, CO 80138

PROJECT NUMBER: 17279.00

DATE: 07.19.2022

DESIGNED: MTW
DRAWN: MTW
CHECKED: MTW

REVISIONS:

JOB DESCRIPTION: SITE PLAN SUBMITTAL

SHEET TITLE: MATERIALS & LAYOUT PLAN

SCALE: 1"=30'-0"

SHEET NUMBER:

L2.4

MATCHLINE - SEE SHEET L2.6

EXISTING FENCE TO REMAIN ALONG THIS PORTION OF THE WEST PROPERTY LINE. CONTRACTOR TO COORDINATE WITH LANDSCAPE ARCHITECT PRIOR TO REMOVAL AND REPLACEMENT OF ANY FENCE ALONG WEST PROPERTY LINE, TYP.

1 L6.4 SMOOTH WIRE FENCE WITH T-POSTS

EXISTING VEGETATION TO REMAIN IN PLACE AND UNDISTURBED WHERE POSSIBLE

EXISTING DRAINAGE DITCH, TYP.

1 L3.0 FARMSTEAD AREA ENLARGEMENT

1 L6.3 TRAIL MARKER

4 L6.1 MOWED TRAIL

7 L6.2 6'-0" BENCH (2)

EXISTING EVERGREEN TREE TO REMAIN, TYP.

2 L6.1 CRUSHER FINES TRAIL 6'-0" WIDE

EXISTING VEGETATION TO REMAIN IN PLACE AND UNDISTURBED, TYP.

EXISTING VEGETATION TO REMAIN IN PLACE AND UNDISTURBED WHERE POSSIBLE

9 L6.1 DRAINAGE PIPE UNDER TRAIL

ORANGE CONSTRUCTION FENCING AROUND AREAS OF CURRENT DISTURBANCE

LIMITS OF DISTURBANCE

EXISTING DECIDUOUS TREE TO REMAIN, TYP.

CONTRACTOR TO RESEED ALL AREAS OF DISTURBANCE

EXISTING VEGETATION TO REMAIN IN PLACE AND UNDISTURBED WHERE POSSIBLE

1 L6.4 SMOOTH WIRE FENCE WITH T-POSTS

9 L6.1 DRAINAGE PIPE UNDER TRAIL

2 L6.1 CRUSHER FINES TRAIL 6'-0" WIDE

2 L6.1 CRUSHER FINES TRAIL 6'-0" WIDE

2 L6.1 CRUSHER FINES TRAIL 6'-0" WIDE

CONTRACTOR TO RESEED ALL AREAS OF DISTURBANCE

ORANGE CONSTRUCTION FENCING AROUND AREAS OF CURRENT DISTURBANCE

LIMITS OF DISTURBANCE

MAIN LOOP TRAIL

6'-0"

MATCHLINE - SEE SHEET L2.4

MATCHLINE - SEE SHEET L2.0

LEGEND

- EXISTING FENCING
- EXISTING GRAVEL
- EXISTING STORM DRAIN
- EXISTING STORM INLET
- EXISTING STORM FES
- EXISTING STORM MANHOLE
- EXISTING ELECTRIC POLE
- EXISTING LIGHT POLE
- EXISTING WELL
- EXISTING POLE
- EXISTING SIGN
- EASEMENT LINE
- PROPERTY LINE
- TOPO MAJOR
- TOPO MINOR
- ORANGE CONSTRUCTION FENCING AROUND ALL AREAS OF DISTURBANCE
- LIMITS OF DISTURBANCE
- EXISTING DRAINAGE DITCH
- VEGETATED SWALE
- PROPOSED SMOOTH WIRE FENCE
- PROPOSED THREE RAIL FENCE
- 6'-0" WIDE STABILIZED CRUSHER FINES TRAIL
- 6'-0" WIDE CRUSHER FINES TRAIL
- 4'-0" MOWED TRAIL
- CONCRETE
- NATIVE SEED IN AREAS OF DISTURBANCE
- EXISTING EVERGREEN TREE
- EXISTING DECIDUOUS TREE
- EXISTING VEGETATION
- WAYFINDING MARKER
- TRAIL MARKER

KEYMAP

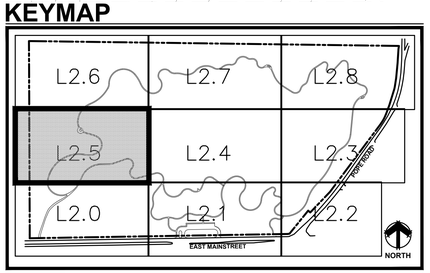

NORTH

0 15 30 60
SCALE 1"=30'-0"

811 Know what's below. Call before you dig.

DHM DESIGN
900 S. Broadway
Suite 300
Denver, CO 80209
303.892.5566
www.dhmdesign.com

REUSE OF DOCUMENT
This document is the property of DHM Design Corp. The ideas and design incorporated on this document is an instrument of professional service and shall not be used for any other project without written authorization of DHM Design Corp.

HARVIE OPEN SPACE PARK

SITE PLAN SUBMITTAL

20120 East Main Street, Parker, CO 80138

PROJECT NUMBER: 17279.00
DATE: 07.19.2022

DESIGNED: MTW
DRAWN: MTW
CHECKED: MTW

REVISIONS:

JOB DESCRIPTION: SITE PLAN SUBMITTAL

SHEET TITLE: MATERIALS & LAYOUT PLAN

SCALE: 1"=30'-0"

SHEET NUMBER: L2.5

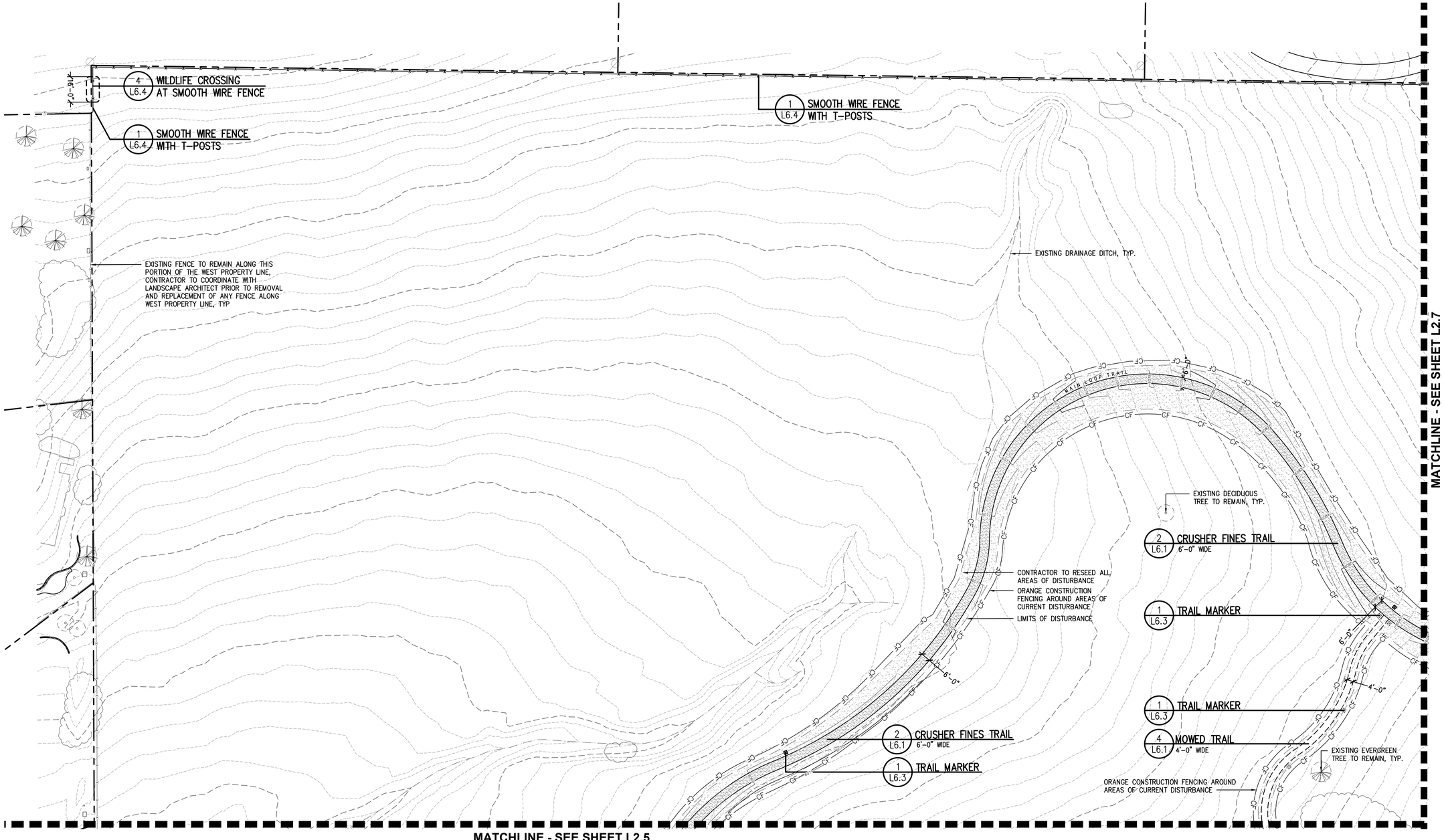

LEGEND

- EXISTING FENCING
- EXISTING GRAVEL
- EXISTING STORM DRAIN
- EXISTING STORM INLET
- EXISTING STORM FES
- EXISTING STORM MANHOLE
- EXISTING ELECTRIC POLE
- EXISTING LIGHT POLE
- EXISTING WELL
- EXISTING POLE
- EXISTING SIGN
- EASEMENT LINE
- PROPERTY LINE
- TOPO MAJOR
- TOPO MINOR
- ORANGE CONSTRUCTION FENCING AROUND ALL AREAS OF DISTURBANCE
- LIMITS OF DISTURBANCE
- EXISTING DRAINAGE DITCH
- VEGETATED SWALE
- PROPOSED SMOOTH WIRE FENCE
- PROPOSED THREE RAIL FENCE
- 6'-0" WIDE STABILIZED CRUSHER FINES TRAIL
- 6'-0" WIDE CRUSHER FINES TRAIL
- 4'-0" MOWED TRAIL
- CONCRETE
- NATIVE SEED IN AREAS OF DISTURBANCE
- EXISTING EVERGREEN TREE
- EXISTING DECIDUOUS TREE
- EXISTING VEGETATION
- WAYFINDING MARKER
- TRAIL MARKER

KEYMAP

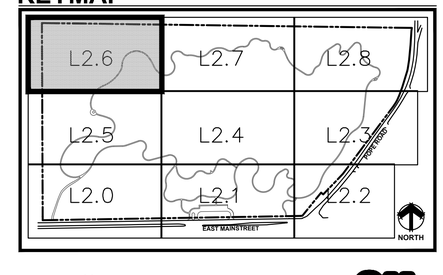

NORTH

0 15 30 60
SCALE 1"=30'-0"

811 Know what's below. Call before you dig.

DHM DESIGN
900 S. Broadway
Suite 300
Denver, CO 80209
303.892.5566
www.dhmdesign.com

REUSE OF DOCUMENT
This document is the property of DHM Design Corp. The ideas and design incorporated on this document is an instrument of professional service and shall not be used for any other project without written authorization of DHM Design Corp.

HARVIE OPEN SPACE PARK

SITE PLAN SUBMITTAL

20120 East Main Street, Parker, CO 80138

PROJECT NUMBER: 17279.00
DATE: 07.19.2022

DESIGNED: MTW
DRAWN: MTW
CHECKED: MTW

REVISIONS:

JOB DESCRIPTION: SITE PLAN SUBMITTAL

SHEET TITLE: MATERIALS & LAYOUT PLAN

SCALE: 1"=30'-0"

SHEET NUMBER: L2.6

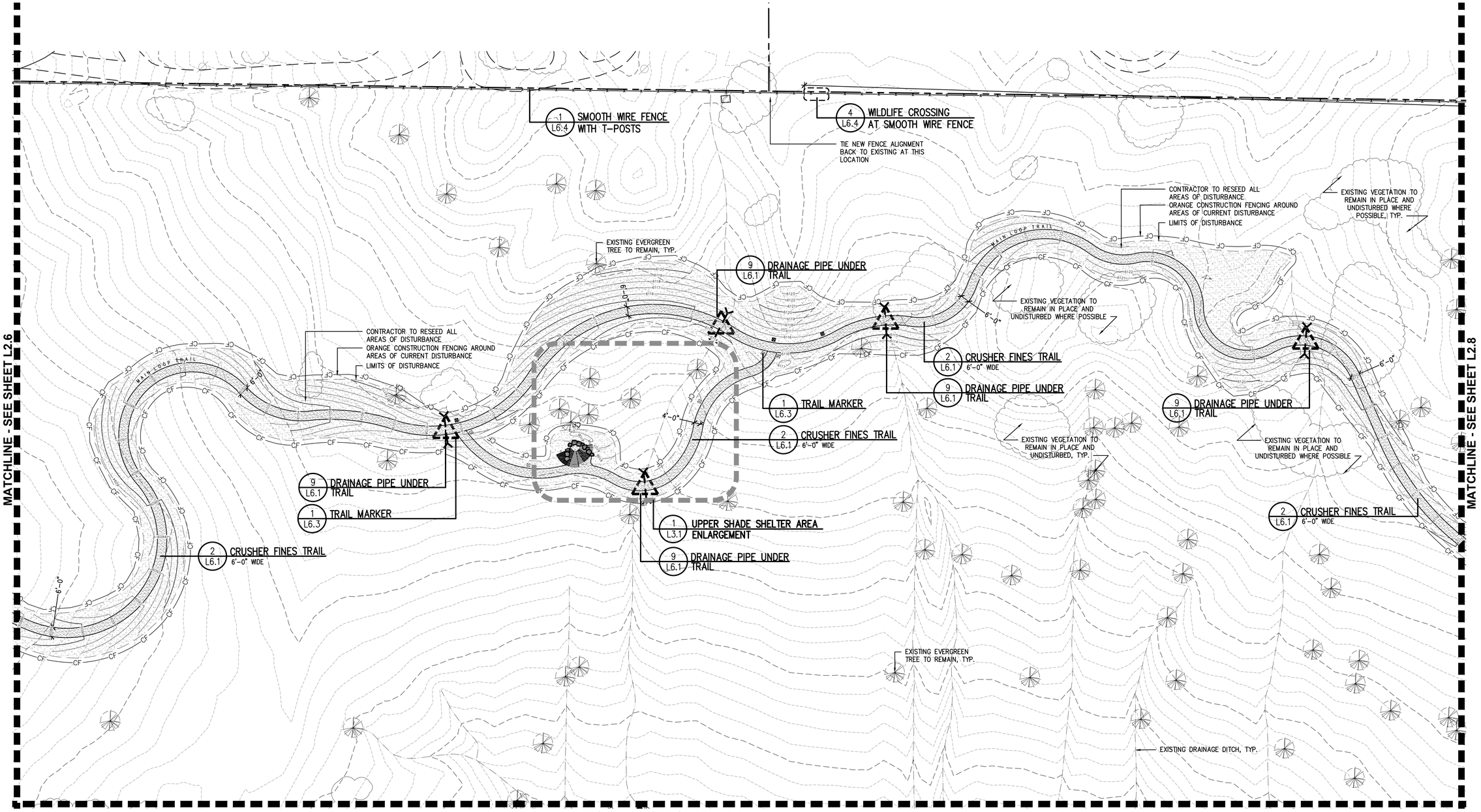

MATCHLINE - SEE SHEET L2.4

LEGEND

- EXISTING FENCING
- EXISTING GRAVEL
- EXISTING STORM DRAIN
- EXISTING STORM INLET
- EXISTING STORM FES
- EXISTING STORM MANHOLE
- EXISTING ELECTRIC POLE
- EXISTING LIGHT POLE
- EXISTING WELL
- EXISTING POLE
- EXISTING SIGN
- EASEMENT LINE
- PROPERTY LINE
- TOPO MAJOR
- TOPO MINOR
- ORANGE CONSTRUCTION FENCING AROUND ALL AREAS OF DISTURBANCE
- LIMITS OF DISTURBANCE
- EXISTING DRAINAGE DITCH
- VEGETATED SWALE
- PROPOSED SMOOTH WIRE FENCE
- PROPOSED THREE RAIL FENCE
- 6'-0" WIDE STABILIZED CRUSHER FINES TRAIL
- 6'-0" WIDE CRUSHER FINES TRAIL
- 4'-0" MOWED TRAIL
- CONCRETE
- NATIVE SEED IN AREAS OF DISTURBANCE
- EXISTING EVERGREEN TREE
- EXISTING DECIDUOUS TREE
- EXISTING VEGETATION
- WAYFINDING MARKER
- TRAIL MARKER

KEYMAP

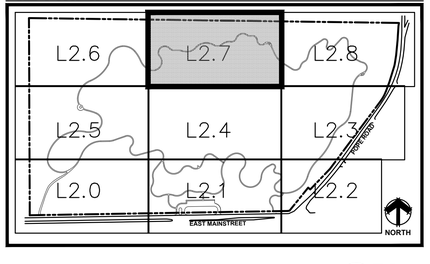

NORTH

0 15 30 60
SCALE 1"=30'-0"

811 Know what's below. Call before you dig.

DHM DESIGN
900 S. Broadway
Suite 300
Denver, CO 80209
303.892.5566
www.dhmdesign.com

REUSE OF DOCUMENT
This document is the property of DHM Design Corp. The ideas and design incorporated on this document is an instrument of professional service and shall not be used for any other project without written authorization of DHM Design Corp.

HARVIE OPEN SPACE PARK

SITE PLAN SUBMITTAL

20120 East Main Street, Parker, CO 80138

PROJECT NUMBER: 17279.00
DATE: 07.19.2022
DESIGNED: MTW
DRAWN: MTW
CHECKED: MTW

REVISIONS:

JOB DESCRIPTION: SITE PLAN SUBMITTAL

SHEET TITLE: MATERIALS & LAYOUT PLAN

SCALE: 1"=30'-0"

SHEET NUMBER: L2.7

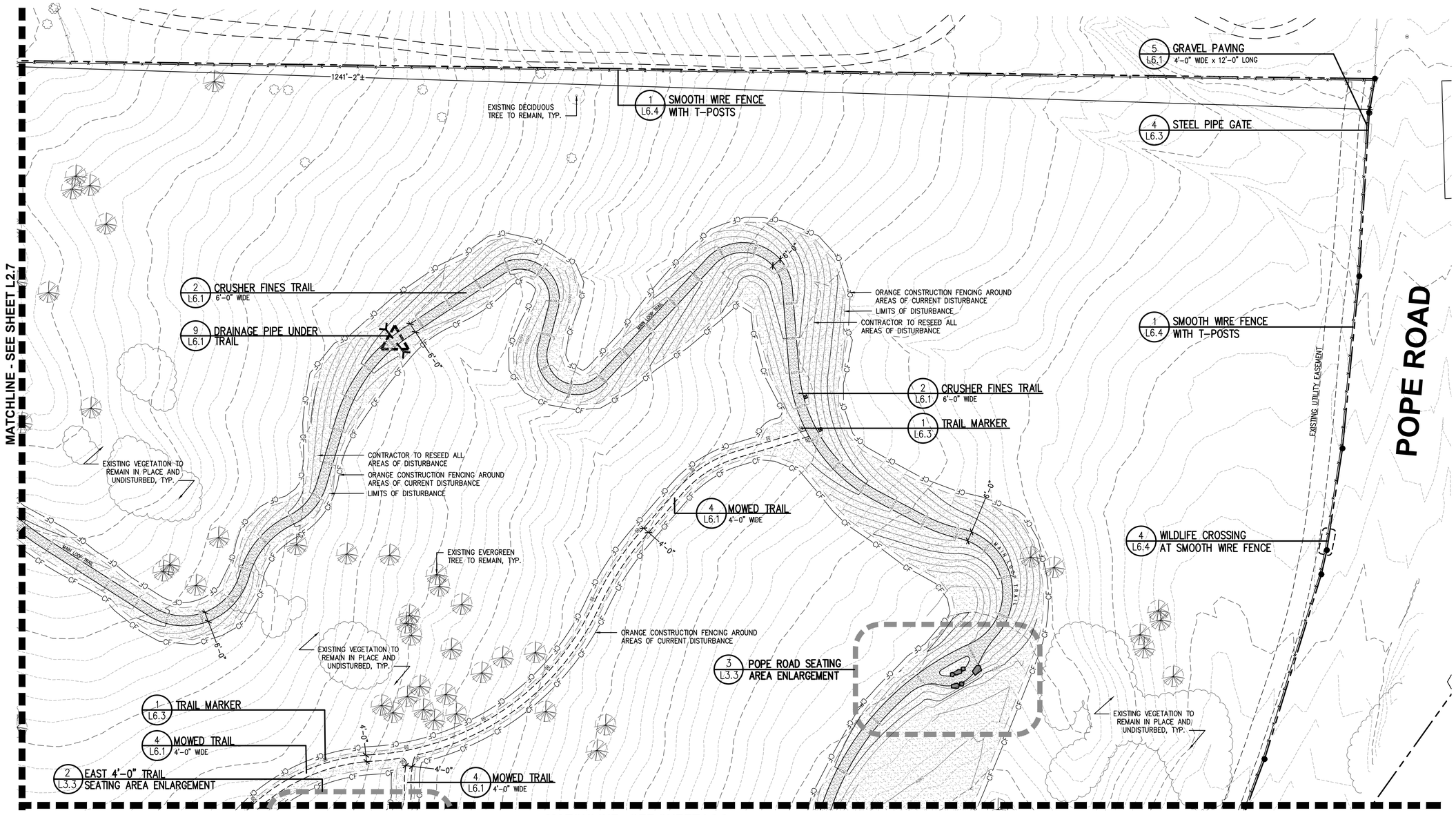

LEGEND

- EXISTING FENCING
- EXISTING GRAVEL
- EXISTING STORM DRAIN
- EXISTING STORM INLET
- EXISTING STORM FES
- EXISTING STORM MANHOLE
- EXISTING ELECTRIC POLE
- EXISTING LIGHT POLE
- EXISTING WELL
- EXISTING POLE
- EXISTING SIGN
- EASEMENT LINE
- PROPERTY LINE
- TOPO MAJOR
- TOPO MINOR
- ORANGE CONSTRUCTION FENCING AROUND ALL AREAS OF DISTURBANCE
- LIMITS OF DISTURBANCE
- EXISTING DRAINAGE DITCH
- VEGETATED SWALE
- PROPOSED SMOOTH WIRE FENCE
- PROPOSED THREE RAIL FENCE
- 6'-0" WIDE STABILIZED CRUSHER FINES TRAIL
- 6'-0" WIDE CRUSHER FINES TRAIL
- 4'-0" MOWED TRAIL
- CONCRETE
- NATIVE SEED IN AREAS OF DISTURBANCE
- EXISTING EVERGREEN TREE
- EXISTING DECIDUOUS TREE
- EXISTING VEGETATION
- WAYFINDING MARKER
- TRAIL MARKER

KEYMAP

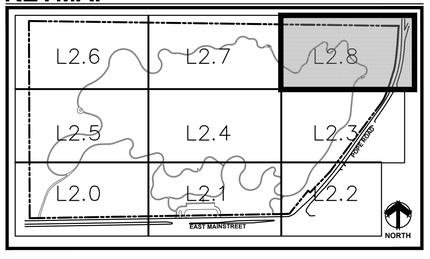

NORTH

0 15 30 60
SCALE 1"=30'-0"

811 Know what's below. Call before you dig.

DHM DESIGN
900 S. Broadway
Suite 300
Denver, CO 80209
303.892.5566
www.dhmdesign.com

REUSE OF DOCUMENT
This document is the property of DHM Design Corp. The ideas and design incorporated on this document is an instrument of professional service and shall not be used for any other project without written authorization of DHM Design Corp.

HARVIE OPEN SPACE PARK

SITE PLAN SUBMITTAL

20120 East Main Street, Parker, CO 80138

PROJECT NUMBER: 17279.00
DATE: 07.19.2022
DESIGNED: MTW
DRAWN: MTW
CHECKED: MTW

REVISIONS:

JOB DESCRIPTION: SITE PLAN SUBMITTAL

SHEET TITLE: MATERIALS & LAYOUT PLAN

SCALE: 1"=30'-0"

SHEET NUMBER: L2.8

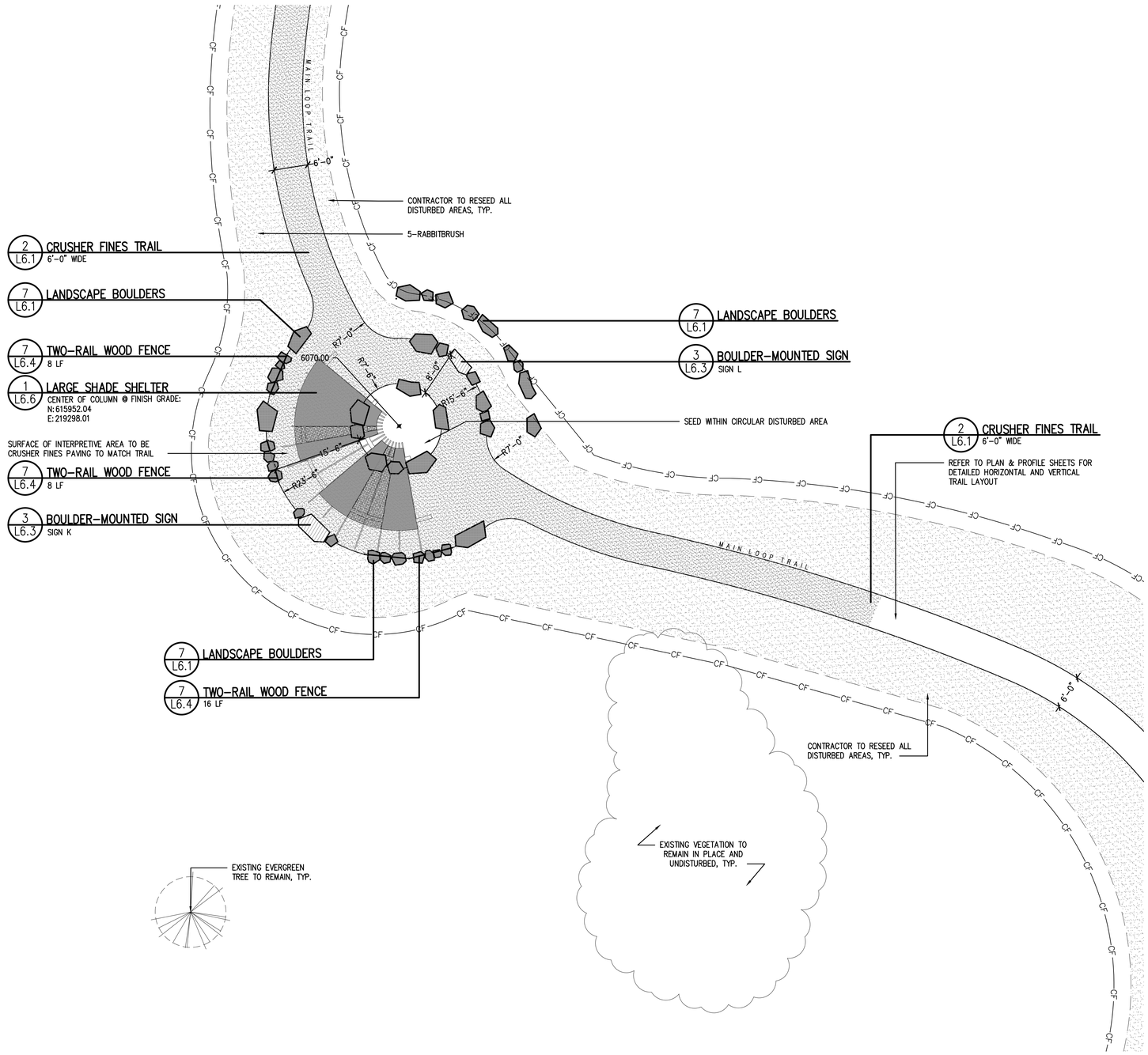

1 FARMSTEAD INTERPRETIVE AREA ENLARGEMENT

SCALE: 1"=10'-0"

NORTH

0 5 10 20
SCALE 1"=10'-0"

811 Know what's below. Call before you dig.

DHM DESIGN
900 S. Broadway
Suite 300
Denver, CO 80209
303.892.5566
www.dhmdesign.com

REUSE OF DOCUMENT
This document is the property of DHM Design Corp. The ideas and design incorporated on this document is an instrument of professional service and shall not be used for any other project without written authorization of DHM Design Corp.

HARVIE OPEN SPACE PARK

SITE PLAN SUBMITTAL

20120 East Main Street, Parker, CO 80138

PROJECT NUMBER: 17279.00
DATE: 07.19.2022
DESIGNED: MTW
DRAWN: MTW
CHECKED: MTW

REVISIONS:

JOB DESCRIPTION: SITE PLAN SUBMITTAL

SHEET TITLE: ENLARGEMENT PLANS

SCALE: 1"=10'-0"

SHEET NUMBER: L3.0

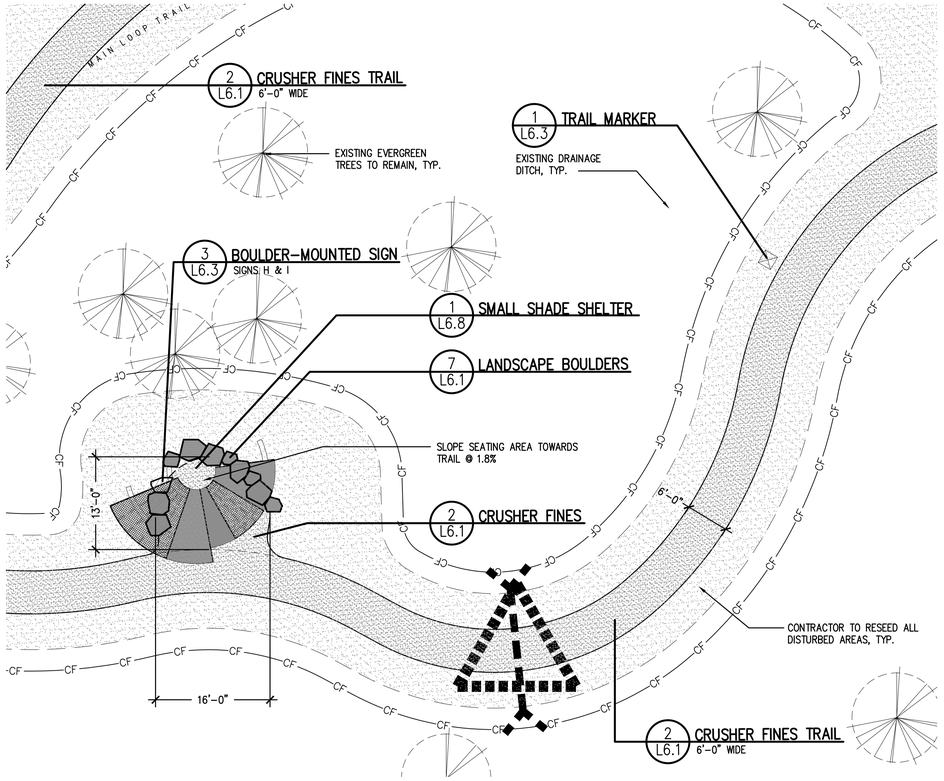

1 UPPER SHADE SHELTER AREA ENLARGEMENT

SCALE: 1"=10'-0"

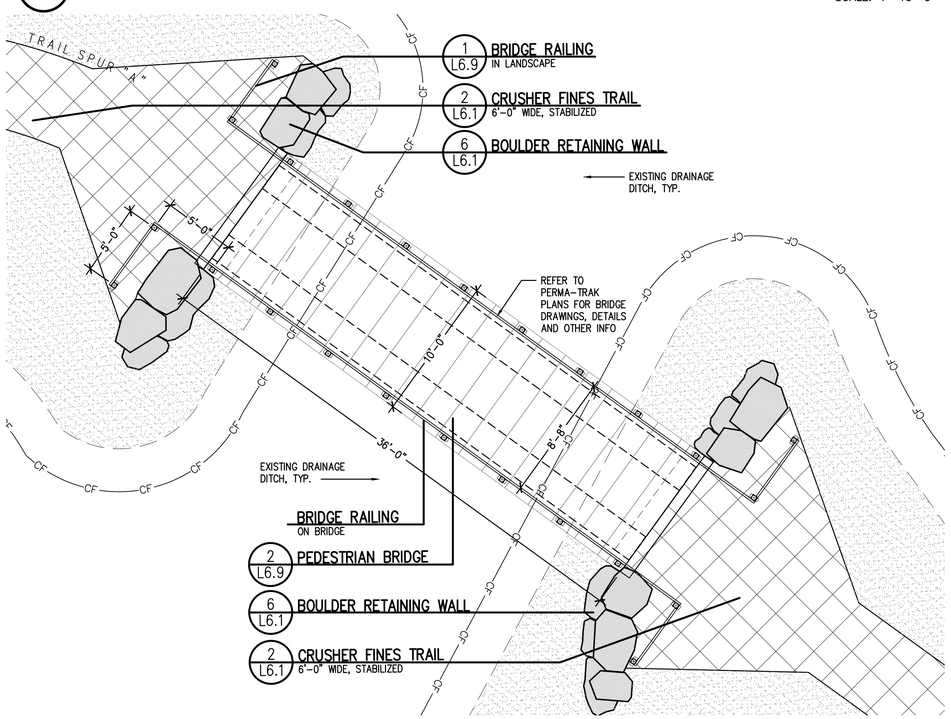

2 BRIDGE ENLARGEMENT

SCALE: 1"=5'-0"

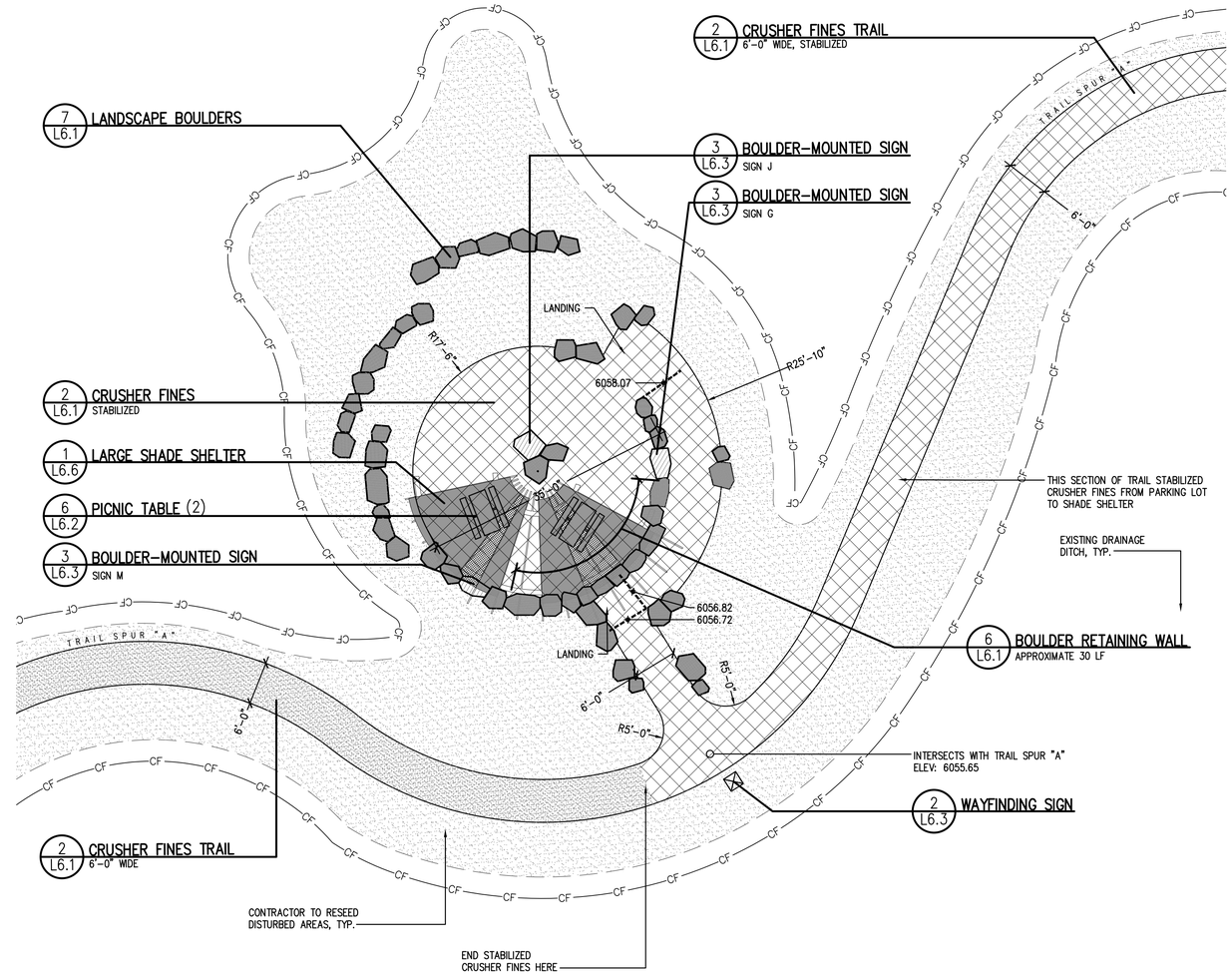

3 LOWER SHADE SHELTER AREA ENLARGEMENT

SCALE: 1"=10'-0"

NORTH

Know what's **below.** **Call** before you dig.

DHM DESIGN
900 S. Broadway
Suite 300
Denver, CO 80209
303.892.5566
www.dhmdesign.com

REUSE OF DOCUMENT
This document is the property of DHM Design Corp. The ideas and design incorporated on this document is an instrument of professional service and shall not be used for any other project without written authorization of DHM Design Corp.

HARVIE OPEN SPACE PARK

SITE PLAN SUBMITTAL

20120 East Main Street, Parker, CO 80138

PROJECT NUMBER: 17279.00
DATE: 07.19.2022
DESIGNED: MTW
DRAWN: MTW
CHECKED: MTW

REVISIONS:

JOB DESCRIPTION: SITE PLAN SUBMITTAL

SHEET TITLE: ENLARGEMENT PLANS

SCALE: AS SHOWN

SHEET NUMBER: **L3.1**

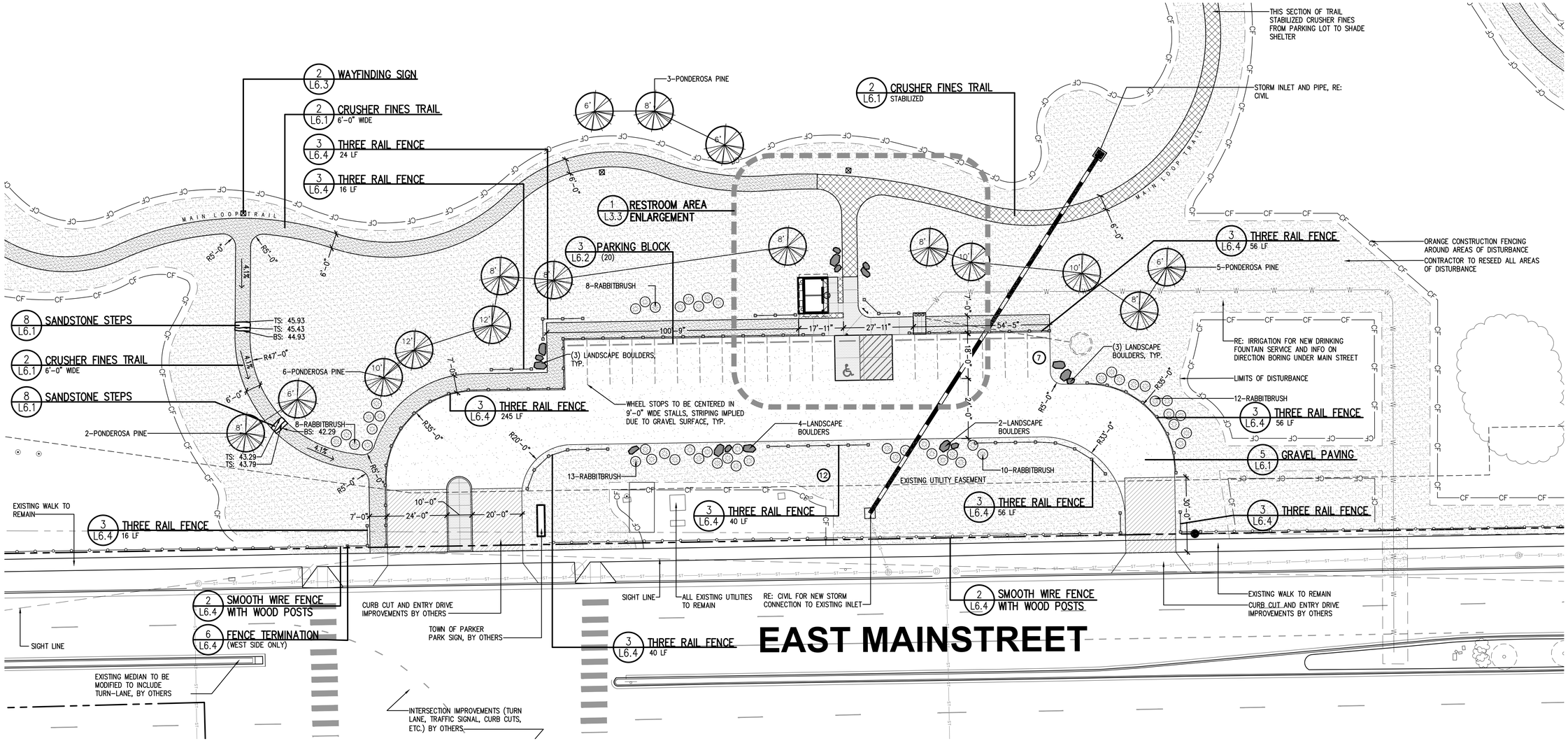

1 PARKING LOT ENLARGEMENT

SCALE: 1"=20'-0"

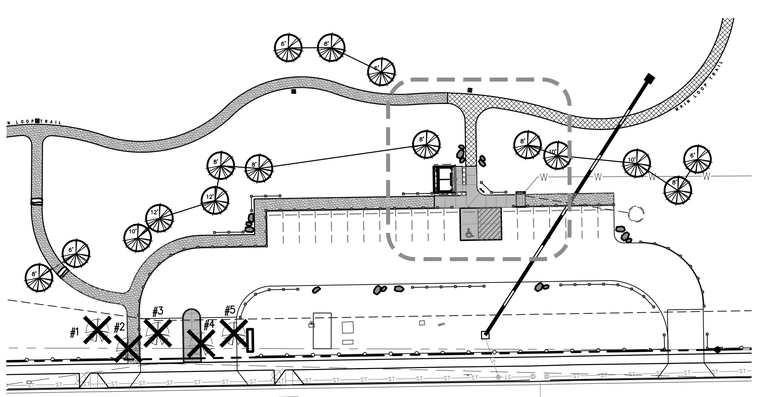

TREE LEGEND

EXISTING EVERGREEN TREE

EXISTING EVERGREEN TREE TO BE REMOVED

EXISTING DECIDUOUS TREE

EXISTING DECIDUOUS TREE TO BE REMOVED

TREE EVALUATION						
Tree	Species	DBH	TA or ATA (in^2)	Status	Condition	Appraised Value
			*ATA if dbh > 30"		Rating%	
1	AP	5	20	Remove	NA	NA/below 6"
2	AP	7	38	Remove	75	$830.00
3	AP	8	50	Remove	75	$1,050.00
4	AP	7.5	44	Remove	75	$940.00
5	AP	6	28	Remove	75	$640.00
					Total Appraised Value	$3,460.00
					Total Trees to be Removed	$3,460.00
					Tree Replacement Value (13 Trees)	$12,800.00

TREE CONSERVATION NOTES:

1. PRIOR TO THE START OF CONSTRUCTION, ALL TREES AND SHRUBS ON THE SITE SHALL BE CLEARLY IDENTIFIED IN THE FIELD AS EITHER "PRESERVE," "RELOCATE" OR "REMOVE" BY THE PROPERTY OWNER. TOWN STAFF SHALL VERIFY THE IDENTIFICATION OF TREES AND SHRUBS ACCORDING TO THE APPROVED TREE CONSERVATION PLAN. TREE OR SHRUB REMOVAL OR REPLACEMENT SHALL NOT COMMENCE UNTIL THE LANDOWNER HAS OBTAINED WRITTEN VERIFICATION OF THE FIELD IDENTIFICATIONS IN ACCORDANCE WITH THE APPROVED TREE CONSERVATION PLAN WITHIN THIRTY (30) DAYS OF WRITTEN NOTIFICATION OF FIELD STAKING. TREES AND SHRUBS TO BE SAVED MAY BE IDENTIFIED IN GROUPS.
2. DURING DEVELOPMENT OR RAZING ACTIVITY, THE LANDOWNER SHALL CAUSE TO BE INSTALLED EFFECTIVE PROTECTION AROUND ALL TREE PRESERVATION AREAS AND SHALL FURTHER INSTALL MECHANISMS SUCH AS TREE WELLS (DEPENDENT UPON SPECIES), RETAINING WALLS OR OTHER STRUCTURES NECESSARY TO PROTECT INDIVIDUAL TREES AND SHRUBS DESIGNATED FOR PRESERVATION. SUCH PROTECTIVE MEASURES SHALL BE SPECIFIED ON THE TREE CONSERVATION PLAN AND SHALL BE DESIGNED AND INSTALLED IN A MANNER CONSISTENT WITH GOOD HORTICULTURAL PRACTICES AND SUBJECT TO THE APPROVAL OF THE PLANNING DIRECTOR, WITH A RECOMMENDATION FROM THE PARKS AND RECREATION DEPARTMENT.
3. THE TOWN SHALL FIELD VERIFY ALL LOCATIONS, SIZES AND QUANTITIES OF REPLACEMENT OR RELOCATED TREES AND SHRUBS PRIOR TO THE WARRANTY PERIOD ACCEPTANCE OF PUBLIC IMPROVEMENTS ASSOCIATED WITH THE DEVELOPMENT. IF NO PUBLIC IMPROVEMENTS ARE INVOLVED, VERIFICATION SHALL OCCUR PRIOR TO THE ISSUANCE OF A CERTIFICATE OF OCCUPANCY. WARRANTY PERIOD ACCEPTANCE OR CERTIFICATES OF OCCUPANCY SHALL NOT BE AUTHORIZED UNTIL WRITTEN VERIFICATION OF COMPLIANCE WITH THE TREE CONSERVATION PLAN IS OBTAINED FROM THE TOWN.
4. ANY REPLACEMENT OR RELOCATED TREE OR SHRUB WHICH DIES WITHIN ONE (1) YEAR OF WRITTEN VERIFICATION OF COMPLIANCE SHALL BE REPLACED WITHIN ONE (1) YEAR OR THE NEXT GROWING SEASON WITH THE SAME APPROVED SIZE AND SPECIES OF THE TREE OR SHRUB WHICH DIED.

2 TREE CONSERVATION EXHIBIT

SCALE: 1"=40'-0"

NORTH

Know what's below. Call before you dig.

DHM DESIGN
900 S. Broadway
Suite 300
Denver, CO 80209
303.892.5566
www.dhmdesign.com

REUSE OF DOCUMENT
This document is the property of DHM Design Corp. The ideas and design incorporated on this document is an instrument of professional service and shall not be used for any other project without written authorization of DHM Design Corp.

HARVIE OPEN SPACE PARK

SITE PLAN SUBMITTAL

20120 East Main Street, Parker, CO 80138

PROJECT NUMBER: 17279.00
DATE: 07.19.2022
DESIGNED: MTW
DRAWN: MTW
CHECKED: MTW

REVISIONS:

JOB DESCRIPTION: SITE PLAN SUBMITTAL

SHEET TITLE: ENLARGEMENT PLANS

SCALE: 1"=20'-0"

SHEET NUMBER: L3.2

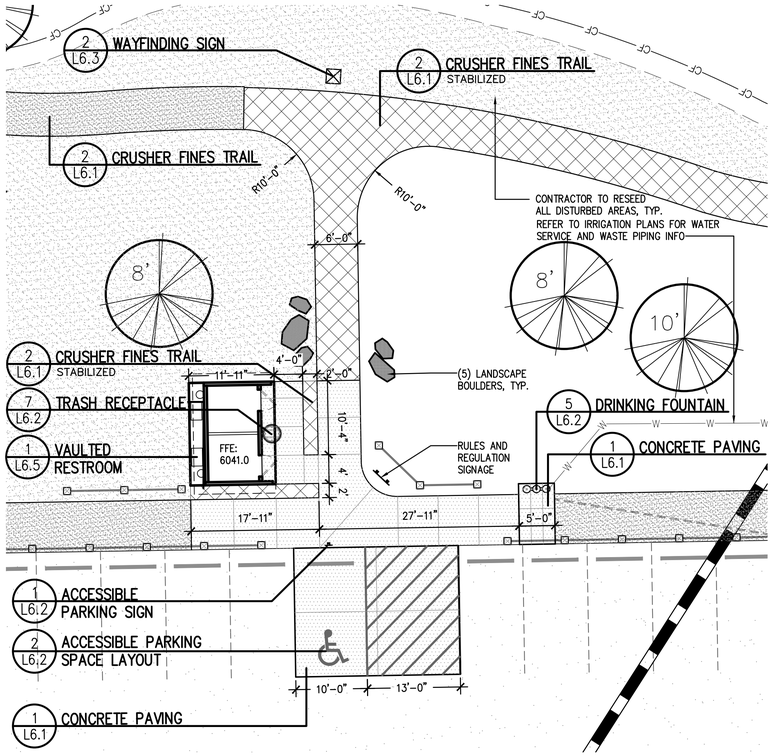

1 RESTROOM AREA ENLARGEMENT

SCALE: 1"=10'-0"

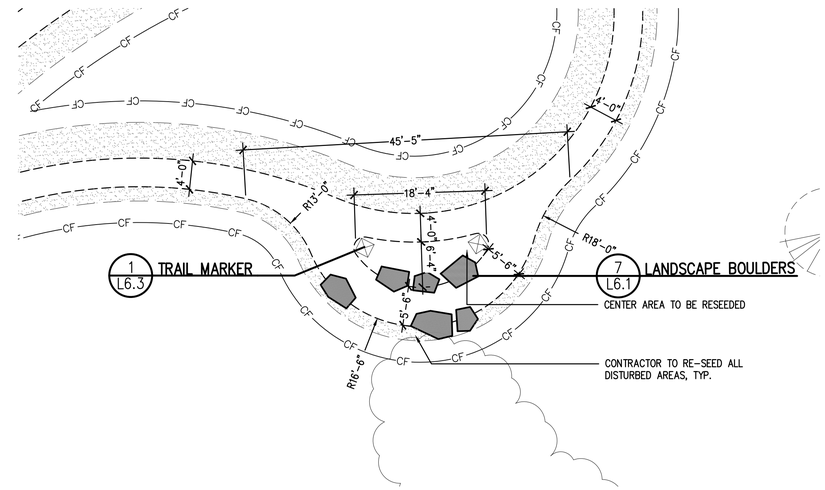

2 EAST 4'-0" TRAIL SEATING AREA ENLARGEMENT

SCALE: 1"=10'-0"

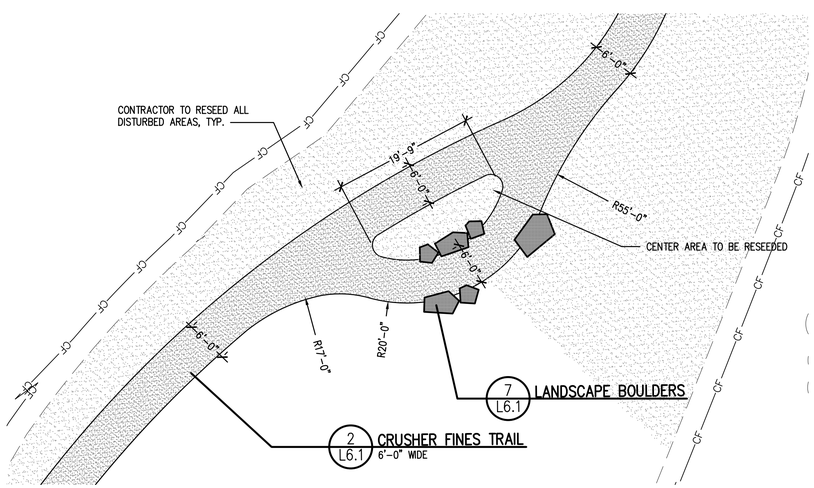

3 POPE ROAD SEATING AREA

SCALE: 1"=10'-0"

NORTH

0 5 10 20
SCALE 1"=10'-0"

811 Know what's below. Call before you dig.

DHM DESIGN
900 S. Broadway
Suite 300
Denver, CO 80209
303.892.5566
www.dhmdesign.com

REUSE OF DOCUMENT
This document is the property of DHM Design Corp. The ideas and design incorporated on this document is an instrument of professional service and shall not be used for any other project without written authorization of DHM Design Corp.

HARVIE OPEN SPACE PARK

SITE PLAN SUBMITTAL

20120 East Main Street, Parker, CO 80138

PROJECT NUMBER: 17279.00
DATE: 07.19.2022
DESIGNED: MTW
DRAWN: MTW
CHECKED: MTW

REVISIONS:

JOB DESCRIPTION: SITE PLAN SUBMITTAL

SHEET TITLE: ENLARGEMENT PLANS

SCALE: 1"=20'-0"

SHEET NUMBER: L3.3

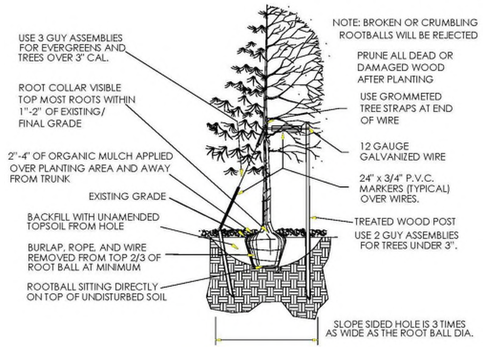

TREE PLANTING NOTES:

1. EXCAVATE PLANTING HOLES WITH SLOPING SIDES. MAKE EXCAVATIONS AT LEAST THREE TIMES AS WIDE AS THE ROOT BALL DIAMETER AND NO DEEPER THAN THE DISTANCE FROM THE TOP MOST ROOTS IN THE ROOT BALL TO THE BOTTOM OF THE ROOT BALL TO ALLOW FOR SETTLING. DO NOT DISTURB SOIL AT BOTTOM OF PLANTING HOLES, BUT DO SCORE THE SIDES OF THE PLANTING HOLE. THE PLANTING AREA SHALL BE LOOSENED AND AERATED AT LEAST THREE TIMES THE DIAMETER OF THE ROOT BALL. BACKFILL SHALL CONSIST OF EXISTING ON SITE TOPSOIL - NO AMENDMENTS SHALL BE USED UNLESS OTHERWISE SPECIFIED.
2. TREES SHALL BE PLANTED WITH THE ROOT COLLAR/FLARE VISIBLE ABOVE GRADE AND TWO OR MORE STRUCTURAL ROOTS LOCATED WITHIN THE TOP 1" TO 2" OF THE ROOT BALL/FINISHED GRADE MEASURED 3" TO 4" FROM TRUNK. THIS INCLUDES TREES THAT ARE SET ON SLOPES (SEE SLOPE PLANTING DETAIL). TREES THAT DO NOT HAVE A VISIBLE ROOT COLLAR SHALL BE REJECTED. DO NOT COVER THE ROOT BALL WITH SOIL.
3. WHEN ROOT BALL WILL REMAIN INTACT, CUT OFF BOTTOM 1/4 OF WIRE BASKET BEFORE PLACING TREE IN HOLE, CUT OFF REMAINDER OF BASKET AFTER TREE IS SET IN HOLE, REMOVE BASKET COMPLETELY. AT A MINIMUM, THE TOP 2/3 OF THE BURLAP AND BASKET SHALL BE REMOVED FROM THE ROOT BALL ON ALL TREES. REMOVE ALL NYLON TIES, TWINE, ROPE AND BURLAP. REMOVE UNNECESSARY PACKING MATERIAL.
4. FORM SOIL INTO A 3" TO 5" TALL WATERING RING (SAUCER) AROUND PLANTING AREA. THIS IS NOT NECESSARY IN IRRIGATED TURF. APPLY 2" TO 4" DEPTH OF SPECIFIED MULCH OVER PLANTING AREA AND INSIDE SAUCERS, AWAY FROM TRUNK.
5. STAKING AND GUYING OF TREES IS OPTIONAL IN MOST PLANTING SITUATIONS. IN AREAS OF EXTREME WINDS, OR ON STEEP SLOPES, STAKING MAY BE REQUIRED TO STABILIZE TREES. STAKING AND GUYING MUST BE REMOVED WITHIN 1 YEAR OF PLANTING DATE.
6. TREE WRAP IS NOT TO BE USED ON ANY NEW PLANTINGS, EXCEPT IN LATE FALL PLANTING SITUATIONS, AND ONLY THEN AFTER CONSULTATION WITH THE TOWN ARBORIST.
7. RESETTING OF IMPROPERLY PLANTED TREES WILL ONLY BE ALLOWED IF IT IS DETERMINED THAT DOING SO WILL IN NO WAY COMPROMISE THE ROOT BALL, AND SHALL ONLY BE DONE WITH APPROVAL OF THE TOWN ARBORIST.

1 TYPICAL DECIDUOUS AND EVERGREEN TREE PLANTING

TOWN OF PARKER STANDARD DETAIL

SCALE: NTS

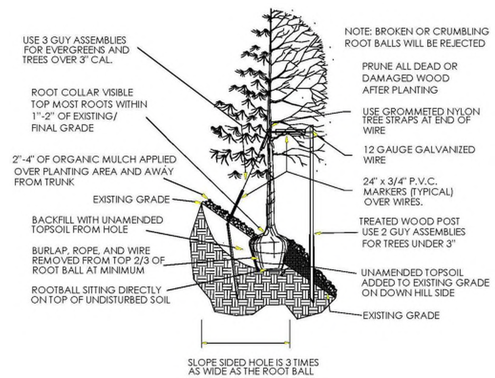

2 TYPICAL TREE PLANTING - SLOPES

TOWN OF PARKER STANDARD DETAIL

SCALE: NTS

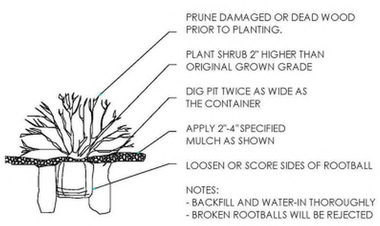

3 TYPICAL SHRUB PLANTING

TOWN OF PARKER STANDARD DETAIL

SCALE: NTS

GENERAL PLANTING & LANDSCAPE NOTES

1. ALL PLANT MATERIAL IS TO BE APPROVED BY TOWN OF PARKER STAFF AND LANDSCAPE ARCHITECT PRIOR TO ARRIVING ON SITE FOR INSTALLATION. NO LESS THAN ONE WEEK NOTICE TO REVIEW AT NURSERY IS REQUIRED.
2. ALL TREE LOCATIONS ARE TO BE STAKED OUT ON THE SITE FOR APPROVAL BY THE LANDSCAPE ARCHITECT PRIOR TO INSTALLATION.
3. THE CONTRACTOR SHALL FINE GRADE ALL AREAS TO BE PLANTED. THE CONTRACTOR SHALL REMOVE REQUIRED DEPTH OF SUB-SOIL ALONG FLATWORK AND WALKWAYS TO ACCOMMODATE TOPSOIL, SOIL AMENDMENTS AND, IF APPLICABLE, MULCH DEPTH.
4. ALL AREAS TO BE PLANTED OR SEEDED WILL HAVE THE TOPSOIL INSTALLED. THESE AREAS WILL THEN BE TILLED TO A MINIMUM 6" DEPTH INCORPORATING A-1 ORGANICS BIOCOMP CLASS 1 COMPOST AT A MINIMUM RATE OF 4 C.Y. PER 1000 S.F. DURING THE TILLING PROCESS. THE DISTURBED AREAS OF THE SITE WILL THEN BE FINE GRADED IN PREPARATION FOR SEEDING, OR PLANTING AS SPECIFIED IN PLANS.
5. ALL SHRUB PLANTINGS AND TREE PLANTINGS WILL RECEIVE A MINIMUM OF 4" OF WESTERN RED CEDAR MULCH ("GORILLA HAIR") OR APPROVED SUBSTITUTE. REFER TO TREE DETAIL FOR MULCH REQUIREMENTS, SHRUBS SHALL HAVE 12" WIDE MULCH RING INSTALLED AROUND EACH SHRUB. THE CONTRACTOR IS RESPONSIBLE FOR WEED CONTROL ON ALL SEEDED AND/OR PLANTED AREAS UNTIL FINAL PROJECT ACCEPTANCE.
6. ALL PLANT MATERIALS WILL CONFORM TO THE AMERICAN ASSOCIATION OF NURSEREYMEN AND STATE OF COLORADO INDUSTRY STANDARDS.
7. THE CONTRACTOR IS RESPONSIBLE FOR VERIFYING ALL PLANT QUANTITIES. SYMBOLS ON ALL SHRUBS AND TREES SHALL TAKE PRECEDENCE OVER WRITTEN QUANTITIES.
8. THE CONTRACTOR SHALL MAINTAIN POSITIVE DRAINAGE AWAY FROM ALL STRUCTURES AND WALKWAYS. ALL FINE GRADING APPROVED BY TOWN OF PARKER AND LANDSCAPE ARCHITECT PRIOR TO SEEDING.
9. CONTRACTOR SHALL INSTALL SLEEVING FOR IRRIGATION IMPROVEMENTS PRIOR TO INSTALLING CONCRETE FLATWORK AND MARK ALL LOCATIONS WHEN SLEEVE IS PLACED UNDER CONCRETE WALK OR CURB & GUTTER.
10. THE CONTRACTOR SHALL BE RESPONSIBLE FOR THE REPAIR OF ANY DAMAGE TO EXISTING UTILITIES, CURB AND GUTTER, WALKWAYS, IRRIGATION SYSTEM AND OTHER EXISTING STRUCTURES THAT IS A RESULT OF HIS WORK, AT NO ADDITIONAL COST TO THE OWNER.

PLANT LIST

Symbol	Common Name	Botanical Name	Min. Size
	EVERGREEN TREES		
	Ponderosa Pine	Pinus ponderosa	6-12' ht, B&B, Specimen
	DECIDUOUS SHRUBS		
	Rabbitbrush	Ericameria nauseosa	# 5, container

SEED MIXES

HARVIE OPEN SPACE SPECIAL NATIVE UPLAND SEED MIXTURE

COMMON NAME	VARIETY	PLS/ACRE
Western Wheatgrass	Rosana	3
Thickspike Wheatgrass	Critana	1
Streambank Wheatgrass	Sodar	2
Slender Wheatgrass	Revenue	2
Snake River Wheatgrass	Secar	1
Beardless Bluebunch Wheatgrass	Whitmar	1.5
Indian Ricegrass	Nezpar, Rimrock, Paloma	2
Sheep Fescue	Azure, Covar	0.5
Arizona Fescue	Redondo	0.6
Prairie Sandreed	Goshen	1.25
Needleandthread Grass	VNS	3
Green Needlegrass	Lodorm	1
Prairie Junegrass	VNS	0.2
Sandberg Bluegrass	High Plains	0.2
Canby Bluegrass	Canbar	0.4
Blue Grama	Bad River	0.5
Sideoats Grama	Butte, Pierre	2
Little Bluestem	Cimarron, Camper	1.5
Big Bluestem	Bison, Champ, Pawnee	1
Blue Flax	Maple Grove	2
Indian Blanketflower	VNS	2
Yellow Prairie Coneflower	VNS	0.4
Prairie Aster	VNS	0.2
Fringed Sagewort	VNS	0.1
Prairie (Louisiana) Sagewort	VNS	0.1
Common Winterfat	VNS	0.1
Douglas Rabbitbrush	VNS	0.3
Rubber Rabbitbrush	VNS	0.5
Total PLS Pounds/Acre		**30.35**

NATIVE SEEDING NOTES

1. THE STATED APPLICATION RATES ARE FOR DRILL-SEEDING. A RANGELAND DRILL WITH THREE SEED BOXES, DOUBLE DISC OPENERS, AND PACKER WHEELS IS REQUIRED. SMALL SEED AND FLUFFY SEED MUST BE SEEDED IN SEPARATE DRILL BOXES FROM THE WHEATGRASSES AND OTHER NORMAL SEED AND SHALL BE PLACED NEAR THE SOIL SURFACE AND LIGHTLY COVERED WITH SOIL.
2. IF HAND BROADCASTING SEED, **DOUBLE THE STATED APPLICATION RATES FOR BROADCAST SEEDING.** IF BROADCAST SEEDING, BE SURE TO RAKE, OR OTHERWISE COVER, THE BROADCAST OR HYDROSEEDED SEEDS WITH A THIN LAYER OF SOIL.
3. THE APPLICATION RATE IS HIGHER THAN NORMAL TO ACCOUNT FOR THE SEVERAL SOIL TYPES AND HABITATS ON THE HARVIE OPEN SPACE SITE. SOME OF THE SPECIES WILL NOT RESPOND IN SOME SOIL TYPES BUT WILL GROW IN OTHERS. AS A RESULT, THE ACTUAL PLS/ACRE IS LESS THAN APPEARS ON A SITE-BY-SITE AND SOIL TYPE-BY-SOIL TYPE BASIS.
4. VNS = VARIETY NOT STATED. MUST BE FROM NORTHERN LATITUDE COLLECTIONS THAT ARE AS SIMILAR AS POSSIBLE IN ELEVATION AND LATITUDE TO THE PROJECT SITE.
5. PRIOR TO SEEDING, CONTRACTOR TO APPLY SOIL CONDITIONER, RICHLAWN ORGANIC 100 3:6:3 OR APPROVED EQUAL, AT 2,000 LBS./ACRE AND ENDO-MYCORRHIZA, MYCOAPPLY ENDO OR APPROVED EQUAL, AT 40 LBS./ACRE (60,000 PROPAGULES/ LB. MINIMUM GUARANTEE). INCORPORATE SOIL CONDITIONER TO A 4" DEPTH. THEN, APPLY ENDO-MYCORRHIZA IMMEDIATELY PRIOR TO OR WITH SEEDING AND COVER WITH A LIGHT LAYER OF SOIL (1/8 - ¼").
6. AFTER SEEDING IS COMPLETE OF NATIVE SEED AREAS, CONTRACTOR TO INSTALL BIODEGRADABLE 100% COCONUT DITCHLINER EROSION CONTROL BLANKET, NAG C125BN OR APPROVED SUBSTITUTE. USE MANUFACTURER'S SUGGESTED STAPLE PATTERN AND SEAM OVERLAP. REFER TO CIVIL'S EROSION CONTROL PLAN FOR FURTHER INFORMATION. WHEN CIVIL REFERS TO "EROSION CONTROL BLANKET" THAT IS THE 100% COCONUT DITCHLINER DESCRIBED IN THIS NOTE; AND SHALL BE INSTALLED WHERE CIVIL CALLS FOR IT, AS WELL AS ALL OTHER AREAS THAT EXPERIENCE DISTURBANCE DURING CONSTRUCTION.

Know what's **below.**
Call before you dig.

DHM DESIGN
900 S. Broadway
Suite 300
Denver, CO 80209
303.892.5566
www.dhmdesign.com

REUSE OF DOCUMENT
This document is the property of DHM Design Corp. The ideas and design incorporated on this document is an instrument of professional service and shall not be used for any other project without written authorization of DHM Design Corp.

HARVIE OPEN SPACE PARK
SITE PLAN SUBMITTAL
20120 East Main Street, Parker, CO 80138

PROJECT NUMBER: 17279.00
DATE: 07.19.2022
DESIGNED: MTW
DRAWN: MTW
CHECKED: MTW
REVISIONS:
JOB DESCRIPTION: SITE PLAN SUBMITTAL
SHEET TITLE: SITE DETAILS
SCALE: AS SHOWN
SHEET NUMBER:
L6.0

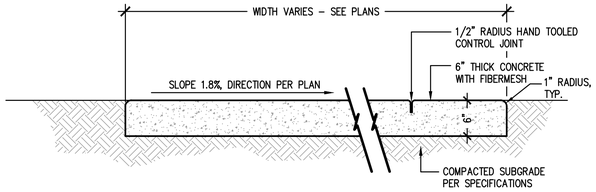

CONCRETE PAVEMENT:

1. 4000 PSI CONCRETE PAVING (CDOT CLASS B/D) W/MEDIUM BROOM FINISH PERPENDICULAR TO TRAFFIC FLOW WITH FIBERMESH. RE: SPEC FOR MIX DESIGN.
2. ALL FINISH SURFACES TO DRAIN AT 1.8% MAXIMUM CROSS SLOPE, UNLESS OTHERWISE NOTED.
3. ALL CONTROL JOINTS TO BE HAND TOOLED TO 1/3 DEPTH OF CONCRETE, REFER TO PLANS FOR EXACT LOCATIONS
4. REFER TO TOWN OF PARKER STANDARD DETAILS FOR ADDITIONAL INFORMATION.

1 CONCRETE PAVING

NOT TO SCALE

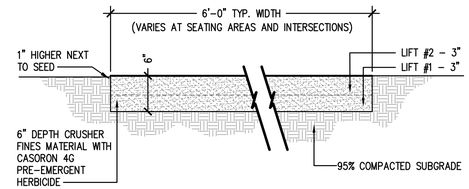

CRUSHER FINES:

1. CRUSHER FINES MATERIAL SHALL MEET THE FOLLOWING SPECIFICATIONS: CLEAN, HARD, DURABLE PARTICLES OR FRAGMENTS OF 3/8" MINUS SELECT GRAY CRUSHED GRANITE, RIVER ROCK OR BASALT. FINES SHALL BE ANGULAR AND MINIMUM OF 90% SHALL HAVE AT LEAST ONE FRACTURED FACE. COLOR TO BE GRAY, SAMPLES OF FINES WILL BE SUBMITTED TO LANDSCAPE ARCHITECT FOR APPROVAL PRIOR TO APPLICATION.
2. TRAIL SUB-BASE SHALL BE ROLLED AND COMPACTED WITH NO LESS THAN 10 PASSES OF THE ROLLER, AREAS OF SUB-BASE THAT HEAVE OR OR FOUND TO NOT BE STABLE DURING ROLLING SHALL BE REMOVED AND REPLACED WITH SUITABLE FILL MATERIAL. BOTH 3" LIFTS OF CRUSHER FINE APPLICATION SHALL BE WATERED, ROLLED AND COMPACTED WITH NO LESS THAN 5 PASSES EACH OF THE ROLLER.
3. TRAIL COMPACTION TEST BY OWNER.
4. SOME SECTIONS OF CRUSHER FINES TRAIL AND SEATING AREAS ARE TO BE STABILIZED – REFER TO PLANS FOR EXACT LOCATIONS.

2 CRUSHER FINES

NOT TO SCALE

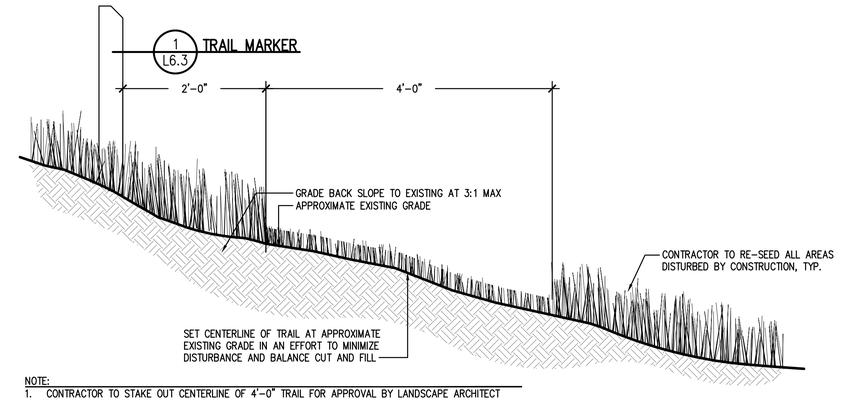

NOTE:

1. CONTRACTOR TO STAKE OUT CENTERLINE OF 4'-0" TRAIL FOR APPROVAL BY LANDSCAPE ARCHITECT

3 MOWED TRAIL

4'-0" WIDTH

NOT TO SCALE

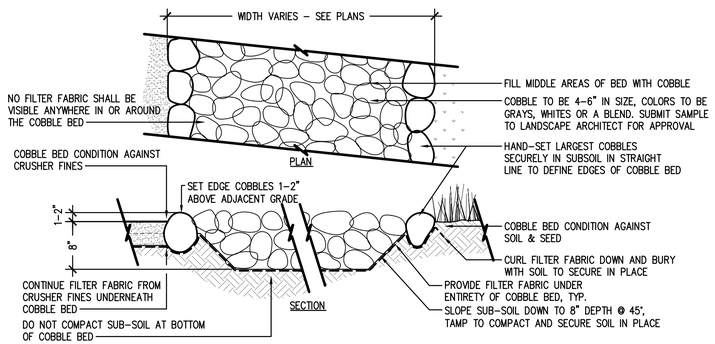

4 COBBLE PAVING

NOT TO SCALE

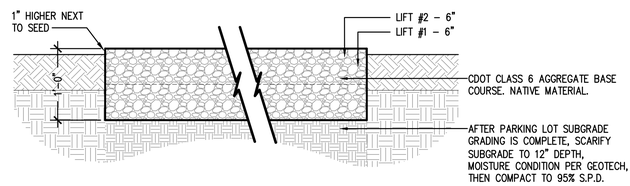

GRAVEL PAVING:

1. REFER TO RECOMMENDATIONS FROM GEOTECHNICAL ENGINEER FOR PARKING LOT SURFACE. USE CDOT CLASS 6 AGGREGATE BASE COURSE NATIVE MATERIAL. GEOTECH RECOMMENDATIONS TAKE PRECEDENCE OVER DETAIL.
2. CONTRACTOR TO PROOF-ROLL SUBGRADE, AND REMOVE SECTIONS THAT SHOW EXCESSIVE HEAVING OR DEFORMATION, REPLACE WITH SUITABLE FILL AND RE-COMPACT.

5 PARKING LOT SURFACING

NOT TO SCALE

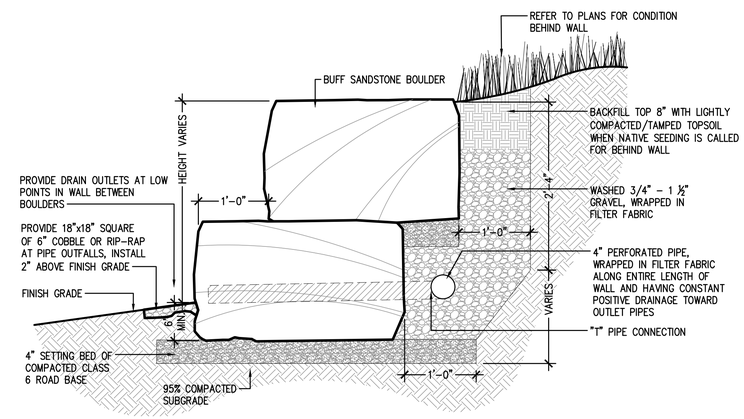

6 BOULDER RETAINING WALL

NOT TO SCALE

NOTE:

1. ALL BOULDERS TO BE SANDSTONE, WITH FLAT TOPS FOR SEATING
2. DO NOT FRACTURE BOULDER DURING PLACEMENT, SUCH ACTION WILL BE CAUSE FOR REJECTION, LANDSCAPE ARCHITECT TO MAKE THAT DETERMINATION
3. SELECT AND PLACE BOULDERS SO THAT MINIMAL EXCAVATION SCARS ARE VISIBLE
4. PLACE BOULDERS TO CONFIGURATIONS AND LOCATIONS AS SHOWN ON PLAN
5. WASH OFF BOULDER AFTER PLACEMENT
6. ALL BOULDERS TO BE BURIED 6"
7. ALL BOULDERS TO BE APPROVED BY THE LANDSCAPE ARCHITECT OR OWNERS REPRESENTATIVE PRIOR TO PLACEMENT

BOULDER SIZES:

1. UNLESS OTHERWISE NOTED, ALL BOULDERS TO BE **MINIMUM** SIZE OF 2'-0" W x 2'-0" L BY 2'-0" H – LARGER SIZES ARE ENCOURAGED

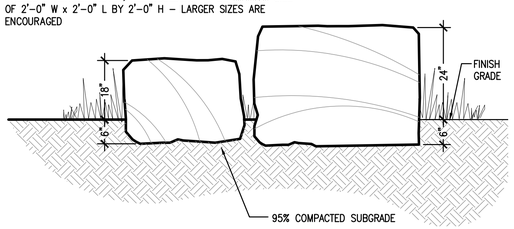

7 LANDSCAPE BOULDERS

NOT TO SCALE

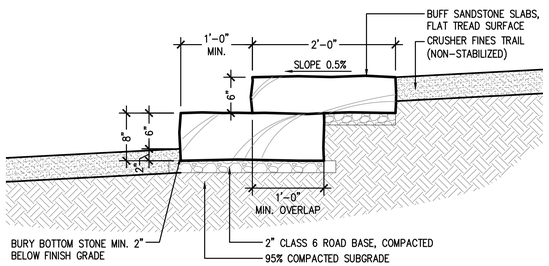

NOTE:

1. SUBGRADE TO BE COMPACTED TO 95% STANDARD PROCTOR DENSITY
2. CONTRACTOR TO OVERLAP SANDSTONE SLABS BY A MINIMUM OF 1'-0"
3. ALL SANDSTONE SLABS TO BE REVIEWED BY LANDSCAPE ARCHITECT PRIOR TO PLACEMENT
4. SLABS TO BE SLOPED 0.5% DOWNHILL TO MAINTAIN POSITIVE DRAINAGE

8 SANDSTONE SLAB STEPS

NOT TO SCALE

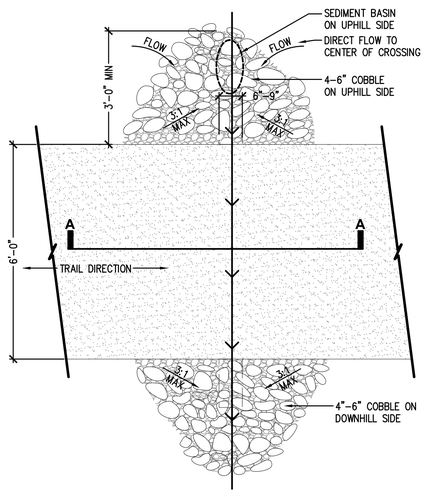

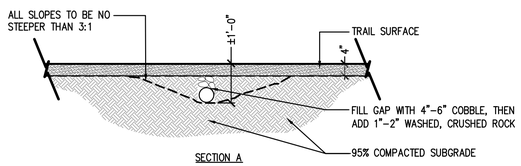

NOTE:

1. CONTRACTOR TO MAINTAIN POSITIVE DRAINAGE FROM HIGH SIDE TO LOW SIDE
2. CONTRACTOR TO GRADE WATER CROSSINGS BACK TO EXISTING GRADE AS QUICKLY AS POSSIBLE AT 3:1 MAX TO MINIMIZE DISTURBANCE

9 DRAINAGE PIPE UNDER TRAIL

NOT TO SCALE

811 Know what's below. Call before you dig.

DHM DESIGN
900 S. Broadway
Suite 300
Denver, CO 80209
303.892.5566
www.dhmdesign.com

REUSE OF DOCUMENT
This document is the property of DHM Design Corp. The ideas and design incorporated on this document is an instrument of professional service and shall not be used for any other project without written authorization of DHM Design Corp.

HARVIE OPEN SPACE PARK

SITE PLAN SUBMITTAL

20120 East Main Street, Parker, CO 80138

PROJECT NUMBER: 17279.00
DATE: 07.19.2022
DESIGNED: MTW
DRAWN: MTW
CHECKED: MTW

REVISIONS:

JOB DESCRIPTION: SITE PLAN SUBMITTAL

SHEET TITLE: SITE DETAILS

SCALE: AS SHOWN

SHEET NUMBER:

L6.1

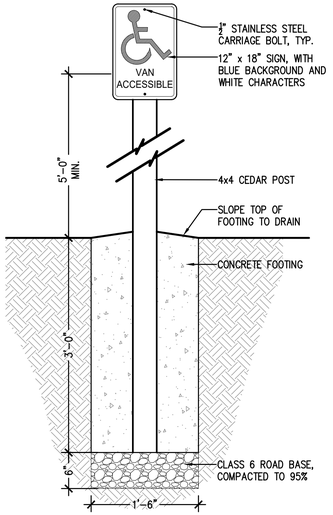

1 ACCESSIBLE PARKING SIGN

NOT TO SCALE

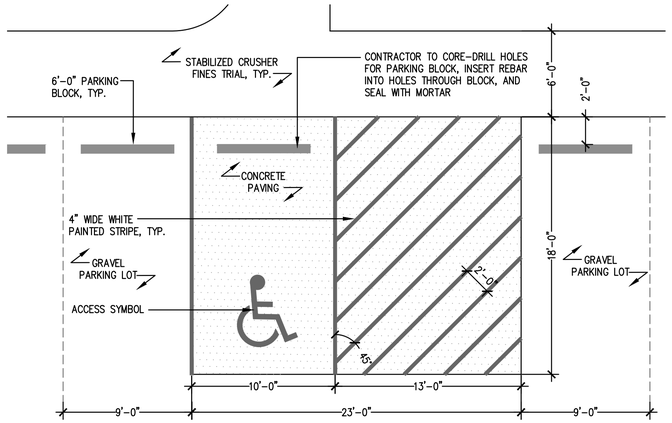

2 ACCESSIBLE PARKING SPACE LAYOUT

NOT TO SCALE

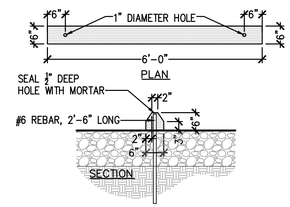

3 PARKING BLOCK

NOT TO SCALE

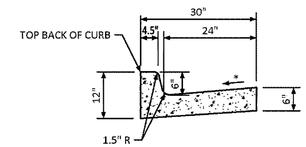

4 CURB AND GUTTER

(TOWN OF PARKER STANDARD DETAIL)

NOT TO SCALE

NOTE:
1. DETAIL TO PROVIDE INFO ON SPECIFIC FOUNTAIN MODEL ONLY
2. INSTALL PER MANUFACTURER'S RECOMMENDATIONS
3. REFER TO IRRIGATION PLANS FOR SERVICE AND WASTE INFO, AMONG OTHER INFORMATION

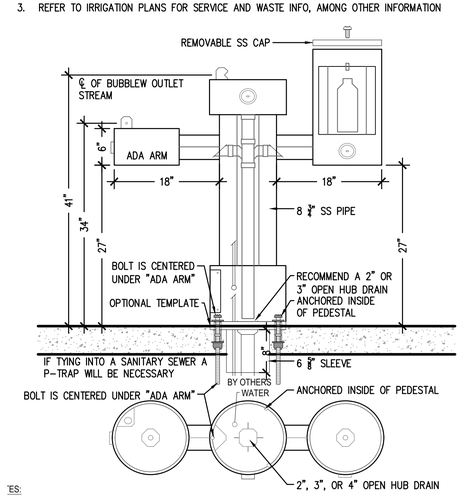

5 DRINKING FOUNTAIN

NOT TO SCALE

MANUFACTURER: MOST DEPENDABLE FOUNTAINS, INC.
MODEL: 2440 SMSS W/ BOTTLE FILLER
COLOR: ORANGE
MOUNTING: ANCHORED TO CONCRETE FLATWORK
SUPPLIED BY: MOST DEPENDABLE FOUNTAINS, INC.
OR APPROVED SUBSTITUTE

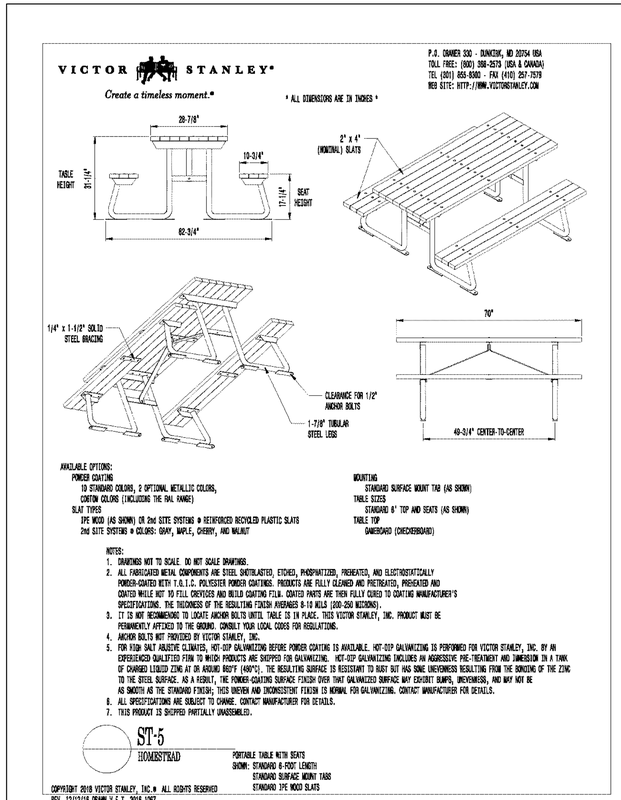

6 PICNIC TABLE

NOT TO SCALE

MANUFACTURER: VICTOR STANLEY
MODEL: ST-5
COLOR: TOP & SEATS: IPE WOOD
SUPPLIED BY: VICTOR STANLEY (301)-855-8300
OR APPROVED SUBSTITUTE

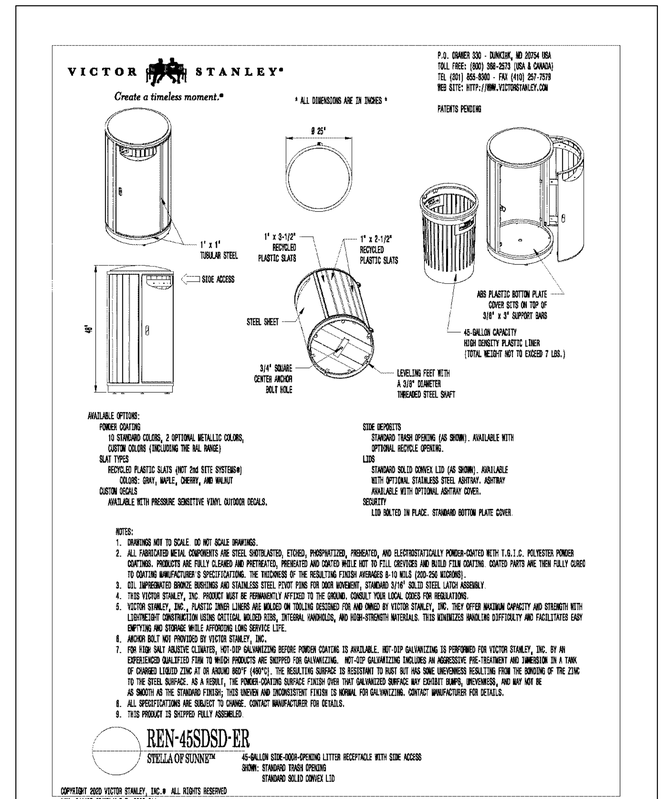

7 TRASH RECEPTACLE

NOT TO SCALE

MANUFACTURER: VICTOR STANLEY
MODEL: REN-45SDSD-ER
COLOR: IPE WOOD & BLACK
MOUNTING: SURFACE MOUNT
SUPPLIED BY: VICTOR STANLEY (301)-855-8300
OR APPROVED SUBSTITUTE

811 Know what's below. Call before you dig.

DHM DESIGN
900 S. Broadway
Suite 300
Denver, CO 80209
303.892.5566
www.dhmdesign.com

REUSE OF DOCUMENT
This document is the property of DHM Design Corp. The ideas and design incorporated on this document is an instrument of professional service and shall not be used for any other project without written authorization of DHM Design Corp.

HARVIE OPEN SPACE PARK

SITE PLAN SUBMITTAL

20120 East Main Street, Parker, CO 80138

PROJECT NUMBER: 17279.00
DATE: 07.19.2022
DESIGNED: MTW
DRAWN: MTW
CHECKED: MTW

REVISIONS:

JOB DESCRIPTION: SITE PLAN SUBMITTAL

SHEET TITLE: SITE DETAILS

SCALE: AS SHOWN

SHEET NUMBER: L6.2

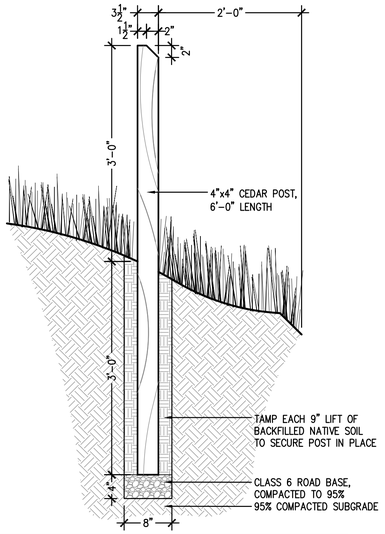

NOTE:
1. TRAIL MARKERS ARE INSTALLED AT TRAIL INTERSECTIONS AND APPROXIMATELY EVERY 50 FT ALONG 4'-0" WIDE SOFT SURFACE TRAIL, RE: PLANS
2. TRAIL MARKERS ARE ALSO USED IN SOME LOCATIONS FOR WAYFINDING SIGNS. SEE SIGNAGE PLAN FOR NUMBER AND LOCATION

1 TRAIL MARKER

NOT TO SCALE

NOTE:
1. REFER TO SIGNAGE PLAN FOR POST LOCATIONS & NUMBER OF SIGNS ON EACH POST, AND ON WHICH SIDE OF POST SIGNS ARE TO BE MOUNTED
2. REFER TO SIGNAGE SCHEDULE FOR IMAGES OF SIGNS
3. ALL SIGNS TO BE PROVIDED BY FOSSIL INDUSTRIES, OR APPROVED SUBSTITUTE

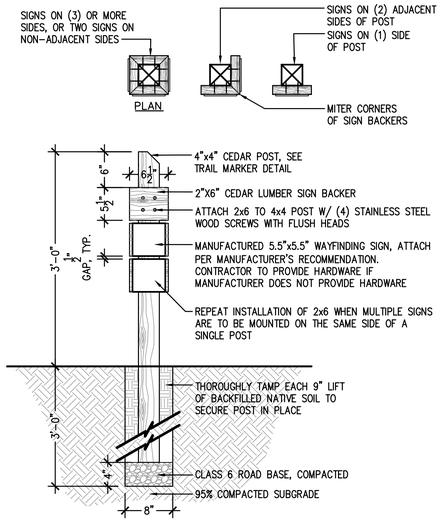

2 WAYFINDING SIGN

NOT TO SCALE

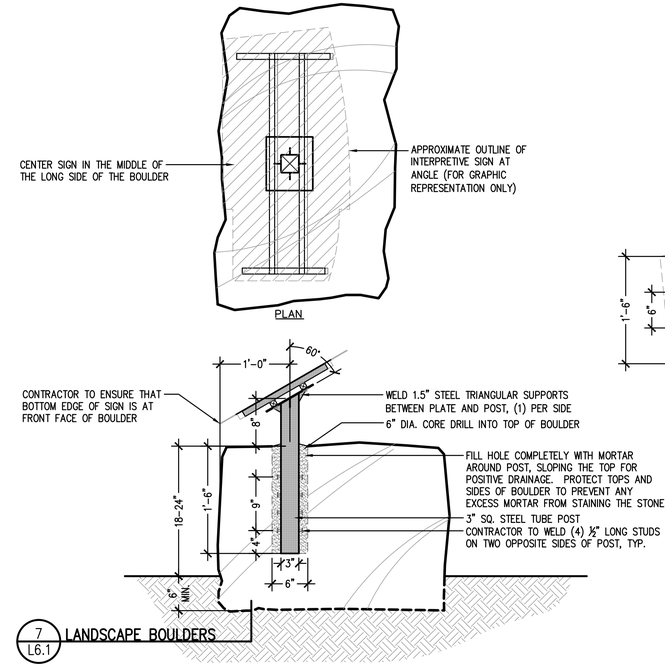

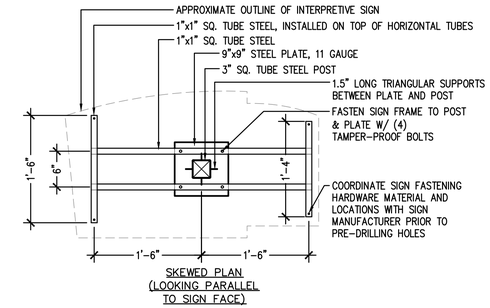

NOTES:
1. ALL SIGN PANELS TO BE PROVIDED BY FOSSIL INDUSTRIES, OR APPROVED SUBSTITUTE. CONTRACTOR TO SUBMIT SAMPLE TO LANDSCAPE ARCHITECT FOR APPROVAL
2. PROVIDE SHOP DRAWINGS FOR SIGN POST & FRAME TO LANDSCAPE ARCHITECT FOR APPROVAL
3. PROVIDE SUBMITTAL FOR MORTAR TO LANDSCAPE ARCHITECT FOR APPROVAL
4. BOULDERS USED FOR SIGN MOUNTING SHALL HAVE A MINIMUM SIZE OF 4'-0"W x 2'-0"L x 2'-0"H
5. BOULDER SELECTION, LOCATION, AND ORIENTATION TO BE APPROVED BY LANDSCAPE ARCHITECT PRIOR TO CORE-DRILLING FOR INSTALLATION
6. GRIND ALL WELDS SMOOTH PRIOR TO POWDERCOATING
7. ALL STEEL COMPONENTS OF SIGN MOUNT TO BE POWDERCOATED BLACK, 100% GLOSS

3 BOULDER-MOUNTED SIGN

NOT TO SCALE

NOTES:
1. CONTRACTOR SHALL PROVIDE NEW STEEL PIPE GATES AND HARDWARE WITH EXACT DIMENSIONS OF EXISTING STEEL PIPE GATES, INSTALLED IN NEW LOCATION – SEE PLAN
2. GATE SHALL BE HUNG LEVEL, ANY SAGGING OF THE GATE(S) WILL REQUIRE REMOVAL AND REINSTALLATION

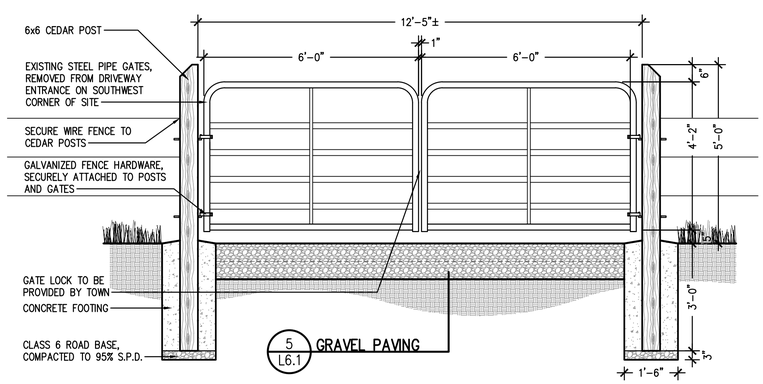

4 STEEL PIPE GATE

NOT TO SCALE

811 Know what's below. Call before you dig.

DHM DESIGN
900 S. Broadway
Suite 300
Denver, CO 80209
303.892.5566
www.dhmdesign.com

REUSE OF DOCUMENT
This document is the property of DHM Design Corp. The ideas and design incorporated on this document is an instrument of professional service and shall not be used for any other project without written authorization of DHM Design Corp.

HARVIE OPEN SPACE PARK
SITE PLAN SUBMITTAL
20120 East Main Street, Parker, CO 80138

PROJECT NUMBER: 17279.00
DATE: 07.19.2022
DESIGNED: MTW
DRAWN: MTW
CHECKED: MTW
REVISIONS:
JOB DESCRIPTION: SITE PLAN SUBMITTAL
SHEET TITLE: SITE DETAILS
SCALE: AS SHOWN
SHEET NUMBER: L6.3

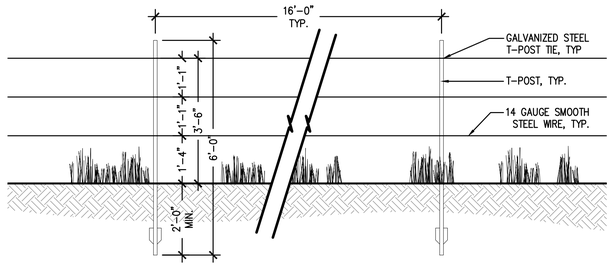

1 SMOOTH WIRE FENCE WITH T-POSTS

NOT TO SCALE

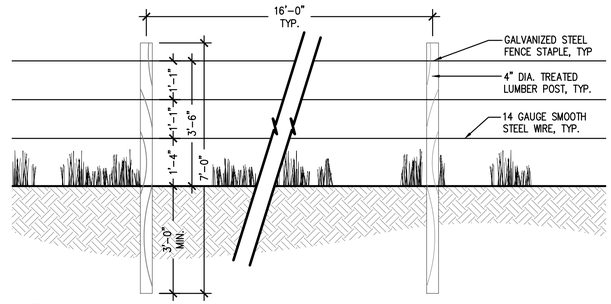

2 SMOOTH WIRE FENCE WITH WOOD POSTS

NOT TO SCALE

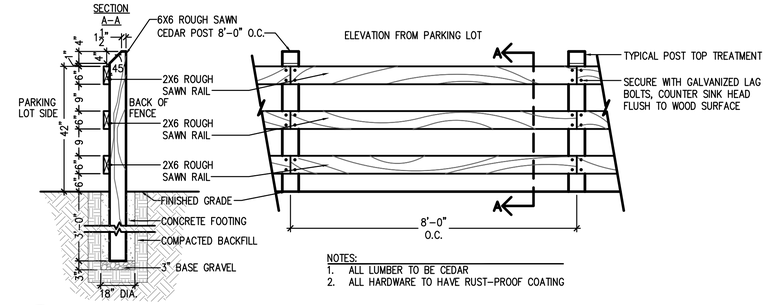

3 THREE RAIL FENCE

NOT TO SCALE

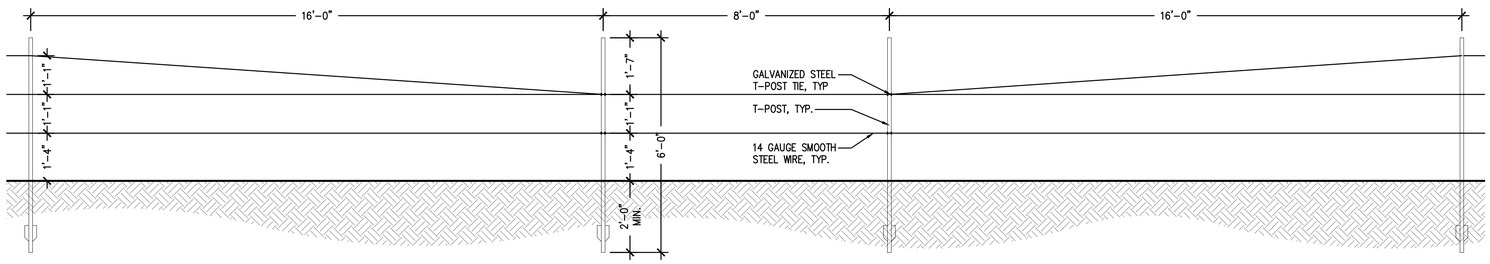

4 WILDLIFE CROSSING AT SMOOTH WIRE FENCE

NOT TO SCALE

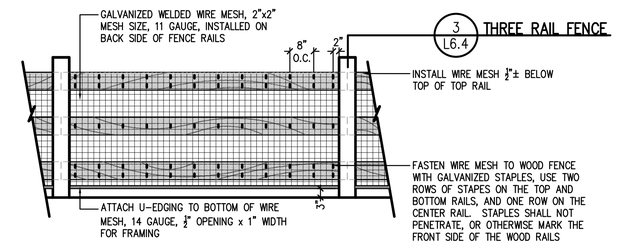

5 WOOD RAIL FENCE WITH WIRE MESH

AT BRIDGE

NOT TO SCALE

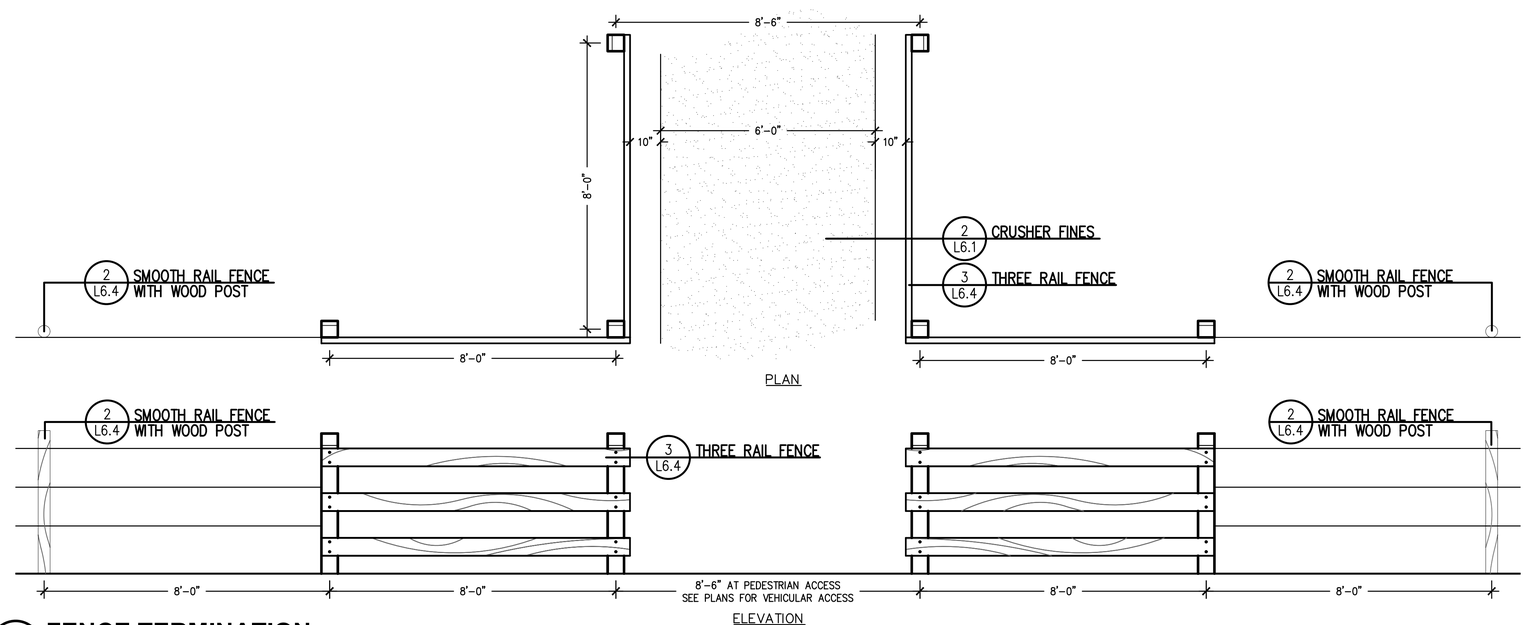

6 FENCE TERMINATION

NOT TO SCALE

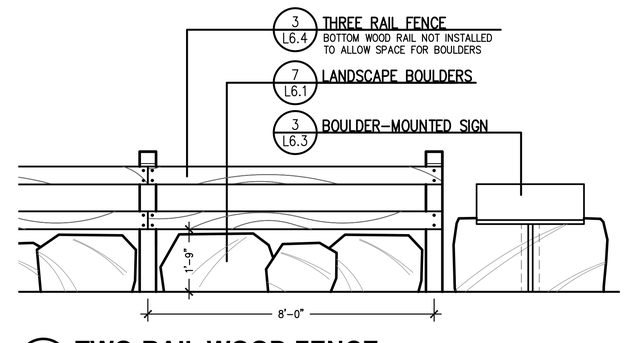

7 TWO-RAIL WOOD FENCE WITH LANDSCAPE BOULDERS

NOT TO SCALE

Know what's **below.**
Call before you dig.

DHM DESIGN
900 S. Broadway
Suite 300
Denver, CO 80209
303.892.5566
www.dhmdesign.com

REUSE OF DOCUMENT
This document is the property of DHM Design Corp. The ideas and design incorporated on this document is an instrument of professional service and shall not be used for any other project without written authorization of DHM Design Corp.

HARVIE OPEN SPACE PARK
SITE PLAN SUBMITTAL
20120 East Main Street, Parker, CO 80138

PROJECT NUMBER: 17279.00
DATE: 07.19.2022
DESIGNED: MTW
DRAWN: MTW
CHECKED: MTW

REVISIONS:

JOB DESCRIPTION: SITE PLAN SUBMITTAL

SHEET TITLE: SITE DETAILS

SCALE: AS SHOWN

SHEET NUMBER:
L6.4

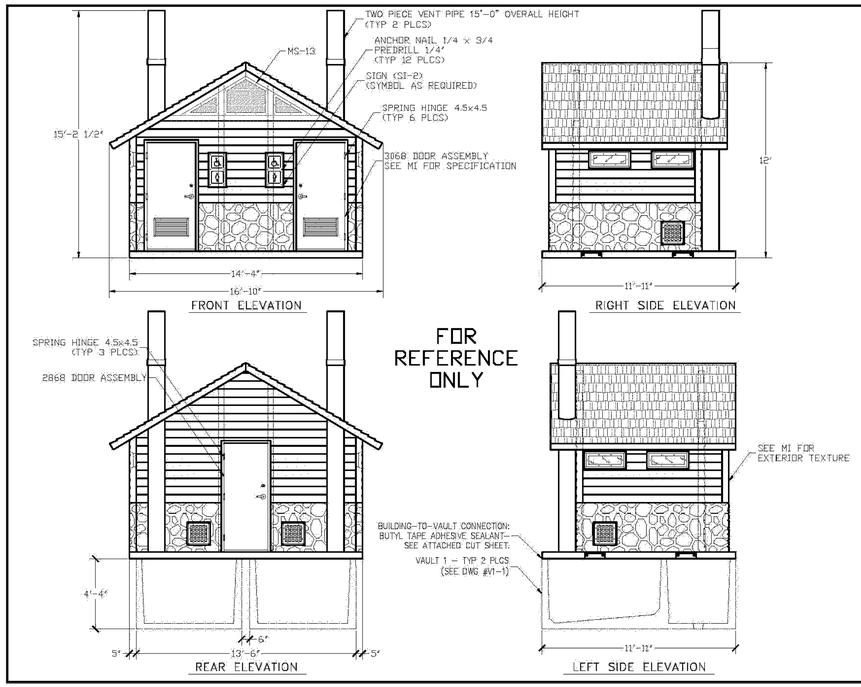

EMBEDDED MATERIALS

ITEM	QTY	ITEM	QTY
SI-2	2		
VENT PIPE 12'-0"	2		
3068 DOOR ASSEMBLY	2		
2868 DOOR ASSEMBLY	1		
ANCHOR NAIL 1/4x3/4	12		
SPRING HINGE 4.5x4.5	9		
MS-13	1		
VENT PIPE 2'-0"	2		

CU. FT. CONC.	SQ. FT. W.M.F.	APPROXIMATE WEIGHT

CXT Precast Products

PROJECT TITLE
DOUBLE ROCKY MTN with CHASE
CXT STANDARD BUILDING

NOTICE

The information contained herein is proprietary and the exclusive property of CXT Incorporated. The information may only be used by the original recipient for the purpose intended. Reproduction or distribution of this information is strictly prohibited without the prior written consent of CXT Incorporated. By allowing use of this information, CXT Incorporated grants no warranty, express or implied, including a warranty of merchantability or of fitness for a particular purpose.

CXT Incorporated

REV.	DESCRIPTION	APPROVAL	DATE
SCALE	1/4"=1'-0"	DATE	07-19-16
DRAWN		FILE NO.	PD-DRWG03
CHECKED		PLOT	48

BUILDING ELEVATIONS

DWG NO. DRMWC-02 | SHEET | REV.

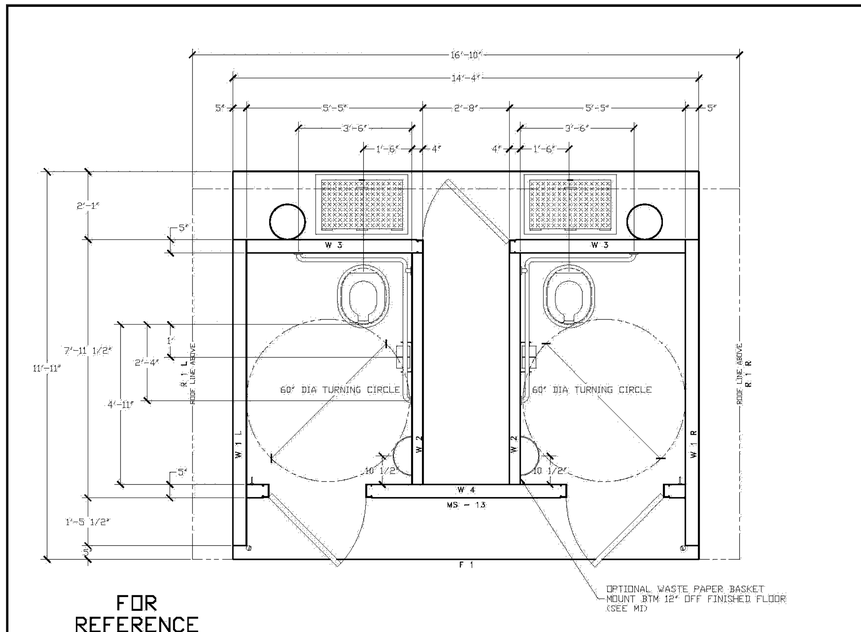

CXT Precast Products

PROJECT TITLE
DOUBLE ROCKY MTN with CHASE
CXT STANDARD BUILDING

NOTICE

The information contained herein is proprietary and the exclusive property of CXT Incorporated. The information may only be used by the original recipient for the purpose intended. Reproduction or distribution of this information is strictly prohibited without the prior written consent of CXT Incorporated. By allowing use of this information, CXT Incorporated grants no warranty, express or implied, including a warranty of merchantability or of fitness for a particular purpose.

CXT Incorporated

REV.	DESCRIPTION	APPROVAL	DATE
SCALE	1/2"=1'-0"	DATE	07-19-16
DRAWN		FILE NO.	PD-DRWG04
CHECKED		PLOT	24

FLOOR PLAN

DWG NO. DRMWC-04 | SHEET | REV.

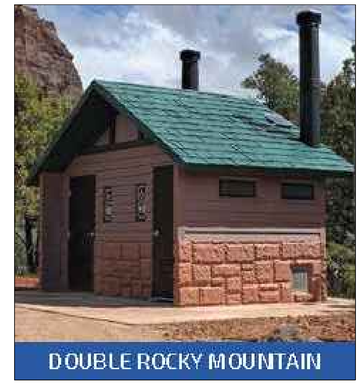

CXT
www.cxtinc.com

COLOR OPTIONS

Amber Rose, Berry Mauve, Buckskin, Cappuccino Cream, Charcoal Gray, Cocoa Milk
Georgia Brick, Golden Beige, Granite Rock, Java Brown, Liberty Tan, Malibu Taupe
Mocha Caramel, Natural Honey, Nuss Brown, Oatmeal Buff, Pueblo Gold, Raven Black
Rich Earth, Rosewood, Salsa Red, Sand Beige, Sun Bronze, Toasted Almond
Western Wheat, Sage Green*, Evergreen†, Hunter Green†

*Additional cost for colored-through concrete.
†Not available in colored-through concrete.

DISCLAIMER: The color samples shown are approximations only. Job site-applied colors will vary from this color chart due to printing variances as well as the texture and porosity of the substrate. CXT recommends applying a color sample to an inconspicuous area on the actual substrate to verify color choice.

STONE COLORS

Mountain Blend, Basalt, Natural Grey, Romana

TEXTURES

Wall: Barnwood, Board & Batt, Horizontal Lap
Stucco, Exposed Aggregate, Split Face Block
Flagstone, Napa Valley, River Rock
Roof: Cedar Shake, Ribbed Metal, Exposed Aggregate

BOARD & BATT SIDING ON TOP SECTION, COLOR TO BE CHARCOAL GREY

NAPA VALLEY ON BOTTOM SECTION, COLOR TO BE NATURAL GREY

CEDAR SHAKE ROOF, COLOR TO BE GRANITE ROCK

CXT
www.cxtinc.com

NOTES:

1. CONTRACTOR TO PROVIDE 1"-2" OF SAND TO SERVE AS LEVELING COURSE FOR VAULT
2. RESTROOM INSTALLER TO PROVIDE EARTHWORK EXCAVATION, TO BE COORDINATED BETWEEN CONTRACTOR AND INSTALLER TO ENSURE ALL PROVISIONS ARE MADE FOR THE RESTROOM INSTALLER
3. CONTRACTOR TO PROVIDE CLEAR ACCESS TO LOCATION OF RESTROOM FOR BOTH ROAD SEMI AND ASSOCIATED TRAILER AND CRANE
4. CONTRACTOR IS RESPONSIBLE FOR ALL UTILITY STUB-UP PRIOR TO BUILDING PLACEMENT PER MANUFACTURER'S DETAILS.
5. CONTRACTOR TO MAKE UTILITY CONNECTIONS TO RESTROOM AFTER BUILDING PLACEMENT BY LICENSED PROFESSIONAL ELECTRICIANS PER MANUFACTURER'S RECOMMENDATIONS.
6. CONTRACTOR TO COORDINATE SCHEDULE AND DELIVERY OF BUILDING WITH BOTH CXT AND OWNER.
7. ACTUAL EXCAVATION AND PLACEMENT OF VAULT AND RESTROOM BY CXT INSTALLER

1 VAULTED RESTROOM

MANUFACTURER: CXT PRECAST PRODUCTS
MODEL: DOUBLE ROCKY MOUNTAIN - 11'-11" x 14'-4"
CONTACT: ROBERT VEALS (254) 404-5147 FOR COORDINATION
PURCHASE OF RESTROOM STRUCTURE: NOT IN CONTRACT

NOT TO SCALE

Know what's **below.** **Call** before you dig.

DHM DESIGN
900 S. Broadway
Suite 300
Denver, CO 80209
303.892.5566
www.dhmdesign.com

REUSE OF DOCUMENT
This document is the property of DHM Design Corp. The ideas and design incorporated on this document is an instrument of professional service and shall not be used for any other project without written authorization of DHM Design Corp.

HARVIE OPEN SPACE PARK
SITE PLAN SUBMITTAL
20120 East Main Street, Parker, CO 80138

PROJECT NUMBER: 17279.00
DATE: 07.19.2022
DESIGNED: MTW
DRAWN: MTW
CHECKED: MTW

REVISIONS:

JOB DESCRIPTION: SITE PLAN SUBMITTAL

SHEET TITLE: SITE DETAILS

SCALE: AS SHOWN

SHEET NUMBER: **L6.5**

LOCATION A: FARMSTEAD EDUCATIONAL INTERPRETIVE AREA
FOR ORIENTATION PURPOSE

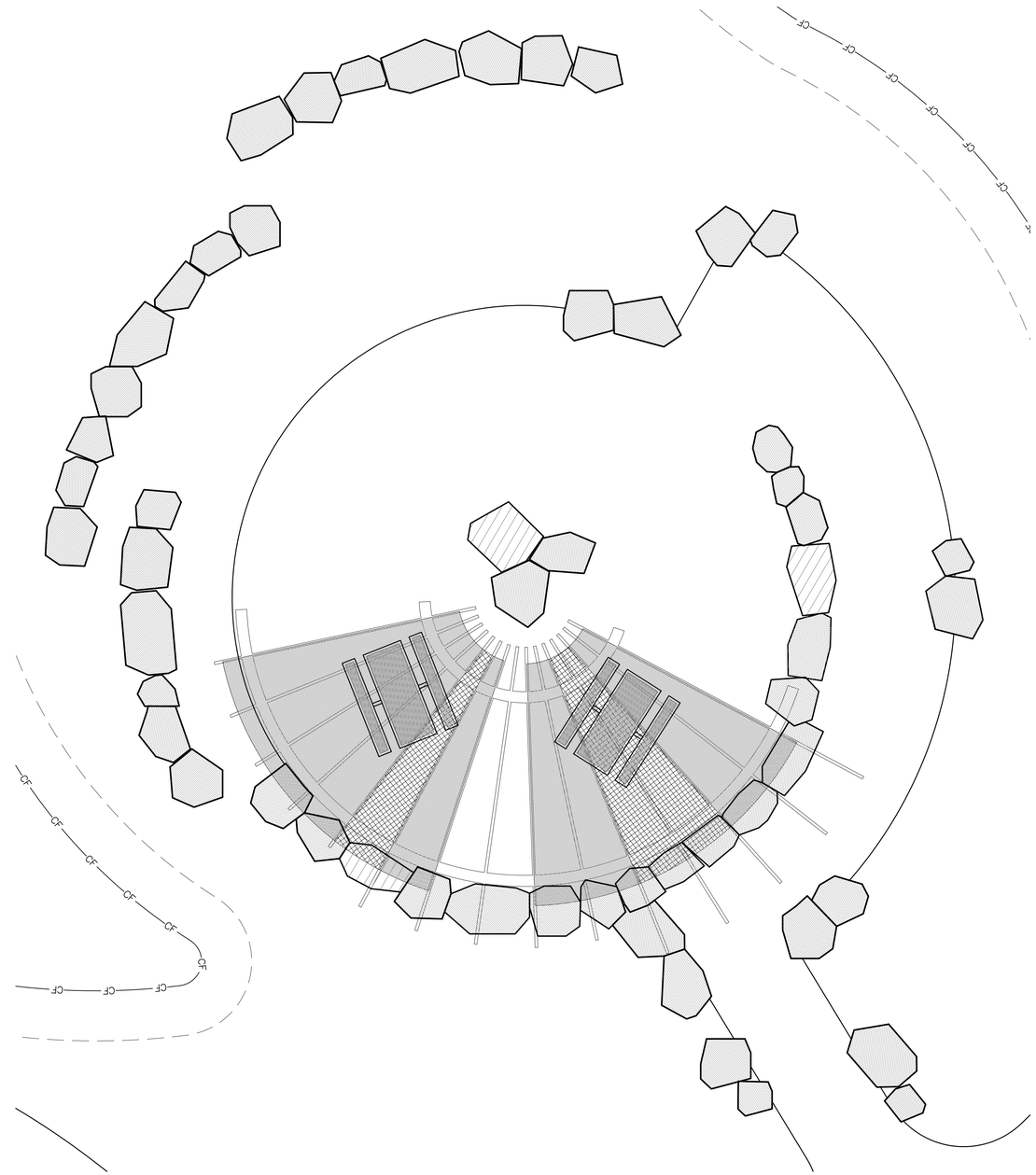

LOCATION B: LOWER SHADE SHELTER AREA
FOR ORIENTATION PURPOSE

1 **LARGE SHADE SHELTER**

NOT TO SCALE

Know what's **below.** **Call** before you dig.

DHM DESIGN
900 S. Broadway
Suite 300
Denver, CO 80209
303.892.5566
www.dhmdesign.com

REUSE OF DOCUMENT
This document is the property of DHM Design Corp. The ideas and design incorporated on this document is an instrument of professional service and shall not be used for any other project without written authorization of DHM Design Corp.

HARVIE OPEN SPACE PARK

SITE PLAN SUBMITTAL

20120 East Main Street, Parker, CO 80138

PROJECT NUMBER: 17279.00
DATE: 07.19.2022
DESIGNED: MTW
DRAWN: MTW
CHECKED: MTW

REVISIONS:

JOB DESCRIPTION: SITE PLAN SUBMITTAL

SHEET TITLE: SITE DETAILS

SCALE: AS SHOWN

SHEET NUMBER: **L6.6**

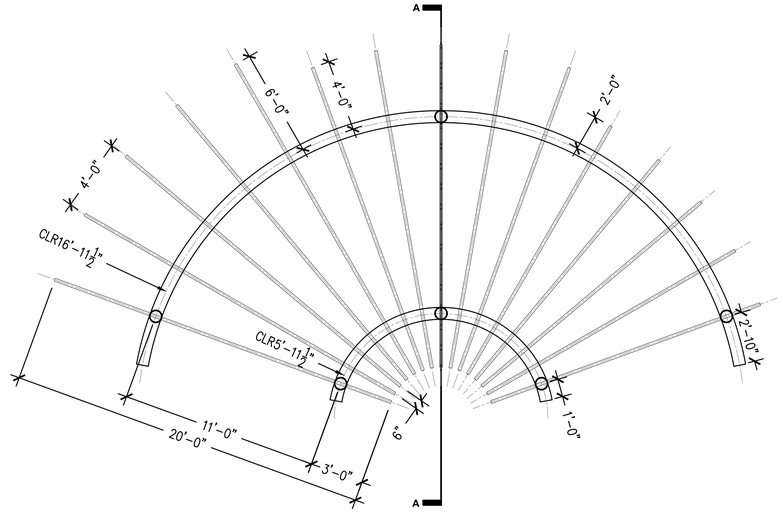

CONTEXT PLAN

NOT TO SCALE

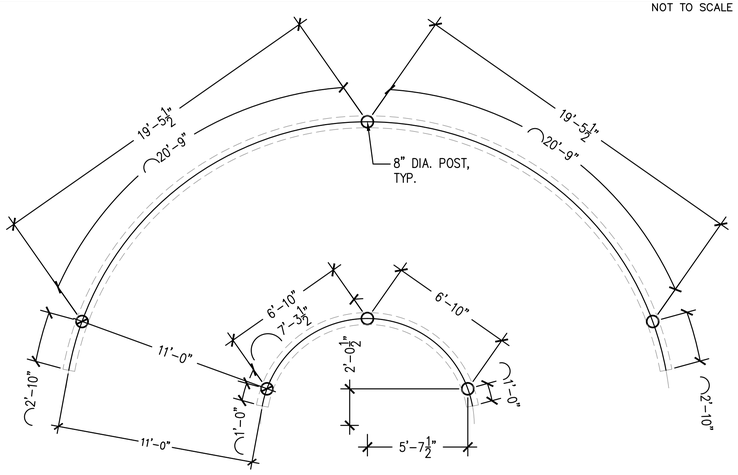

POST LAYOUT

NOT TO SCALE

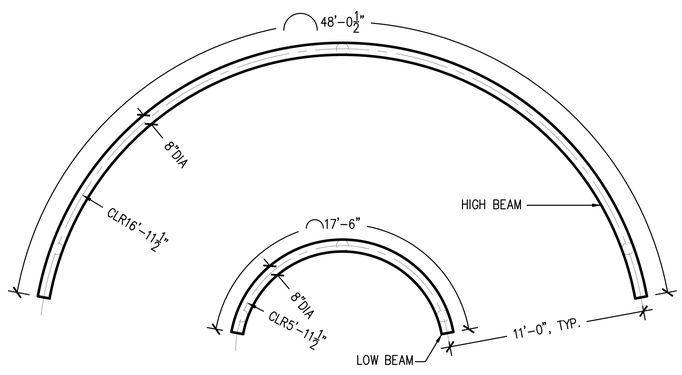

BEAM LAYOUT

NOT TO SCALE

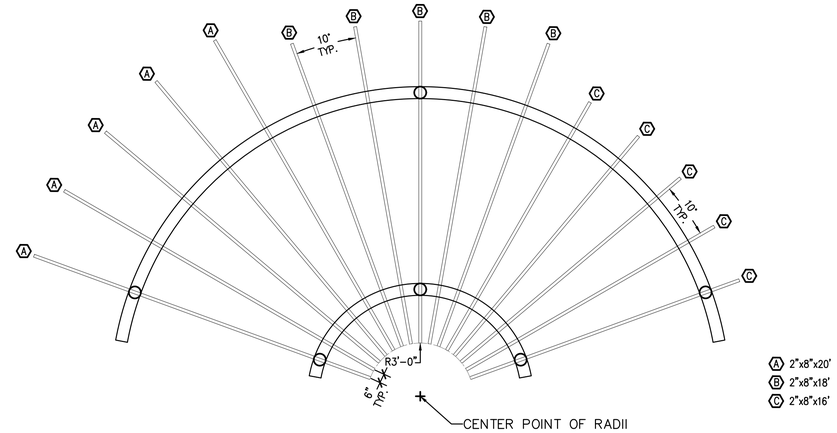

JOIST LAYOUT

NOT TO SCALE

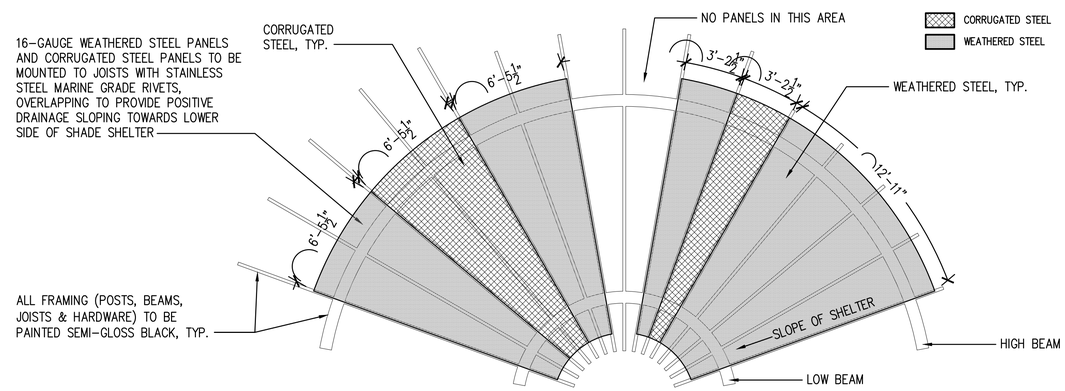

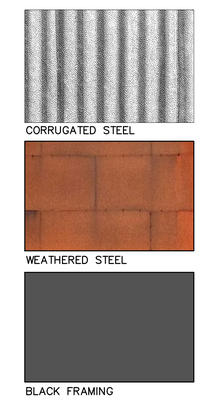

PANEL LAYOUT

NOT TO SCALE

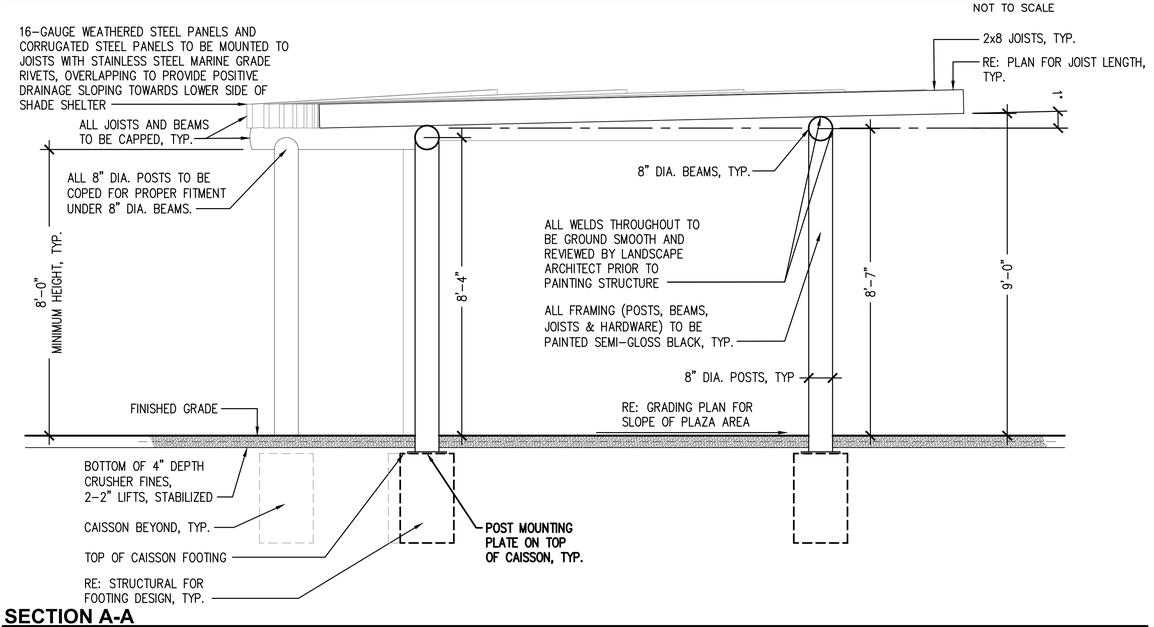

SECTION A-A

NOT TO SCALE

1 **LARGE SHADE SHELTER**

811 Know what's **below.** **Call** before you dig.

DHM DESIGN
900 S. Broadway
Suite 300
Denver, CO 80209
303.892.5566
www.dhmdesign.com

REUSE OF DOCUMENT
This document is the property of DHM Design Corp. The ideas and design incorporated on this document is an instrument of professional service and shall not be used for any other project without written authorization of DHM Design Corp.

HARVIE OPEN SPACE PARK

SITE PLAN SUBMITTAL

20120 East Main Street, Parker, CO 80138

PROJECT NUMBER: 17279.00
DATE: 07.19.2022
DESIGNED: MTW
DRAWN: MTW
CHECKED: MTW

REVISIONS:

JOB DESCRIPTION: SITE PLAN SUBMITTAL

SHEET TITLE: SITE DETAILS

SCALE: AS SHOWN

SHEET NUMBER: **L6.7**

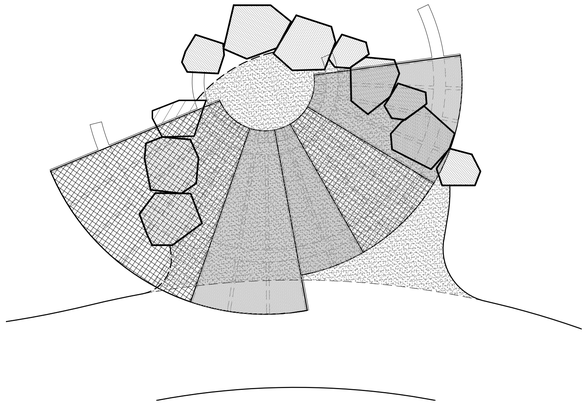

UPPER SHADE SHELTER AREA

NOT TO SCALE

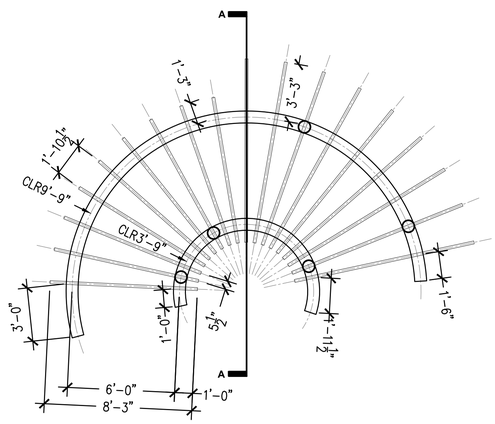

CONTEXT PLAN

NOT TO SCALE

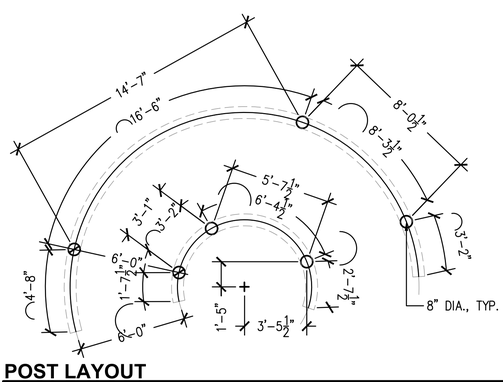

POST LAYOUT

NOT TO SCALE

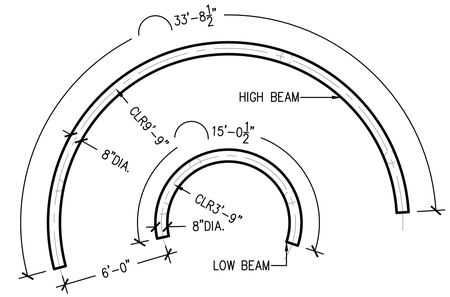

BEAM LAYOUT

NOT TO SCALE

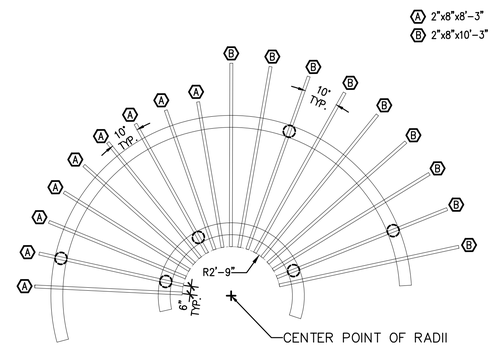

JOIST LAYOUT

NOT TO SCALE

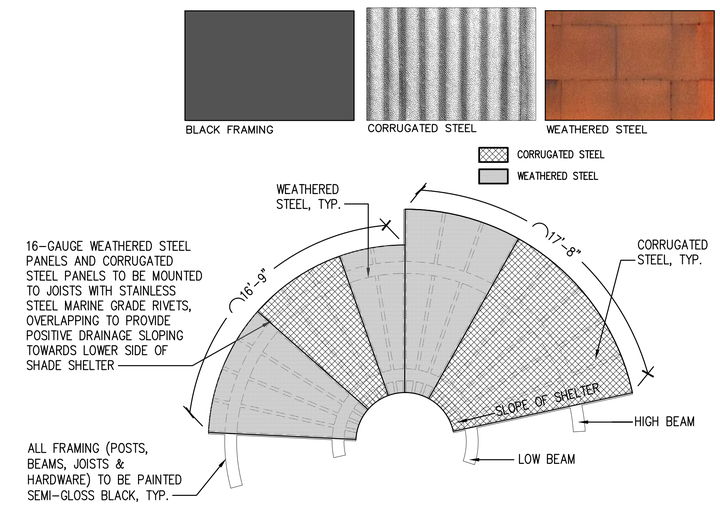

PANEL LAYOUT

NOT TO SCALE

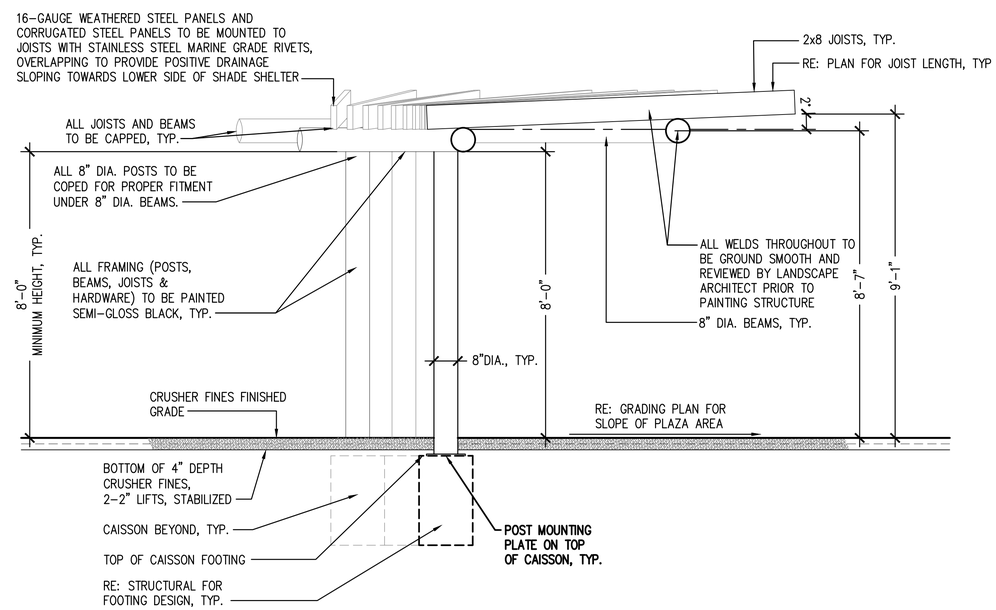

SECTION A-A

NOT TO SCALE

1 SMALL SHADE SHELTER

811 Know what's below. Call before you dig.

DHM DESIGN
900 S. Broadway
Suite 300
Denver, CO 80209
303.892.5566
www.dhmdesign.com

REUSE OF DOCUMENT
This document is the property of DHM Design Corp. The ideas and design incorporated on this document is an instrument of professional service and shall not be used for any other project without written authorization of DHM Design Corp.

HARVIE OPEN SPACE PARK

SITE PLAN SUBMITTAL

20120 East Main Street, Parker, CO 80138

PROJECT NUMBER: 17279.00
DATE: 07.19.2022
DESIGNED: MTW
DRAWN: MTW
CHECKED: MTW

REVISIONS:

JOB DESCRIPTION: SITE PLAN SUBMITTAL

SHEET TITLE: SITE DETAILS

SCALE: AS SHOWN

SHEET NUMBER:

L6.8

NOTE:
1. BRIDGE RAILING EXTENDED INTO LANDSCAPE SHALL MATCH RAILING ON BRIDGE EXACTLY, WITH THE EXCEPTION OF THE MOUNTING AND FOOTING
2. REFER TO BRIDGE PLANS FOR DETAILS AND INFORMATION RAILING MATERIALS AND CONSTRUCTION
3. CONTRACTOR MAY ELECT TO PROVIDE EMBEDDED RUST-PROOF BRACKETS IN CONCRETE CAISSONS TO BOLT WOODEN POSTS TO DECK
4. WOOD POSTS MAY NEED TO BE LONGER THAN SHOWN AS GRADE DROPS AWAY FROM TRAIL/BRIDGE IN ORDER TO MAINTAIN LEVEL HORIZONTAL RAILS, AND FOOTING DEPTH

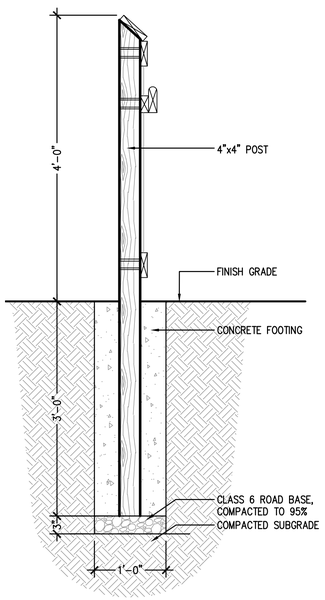

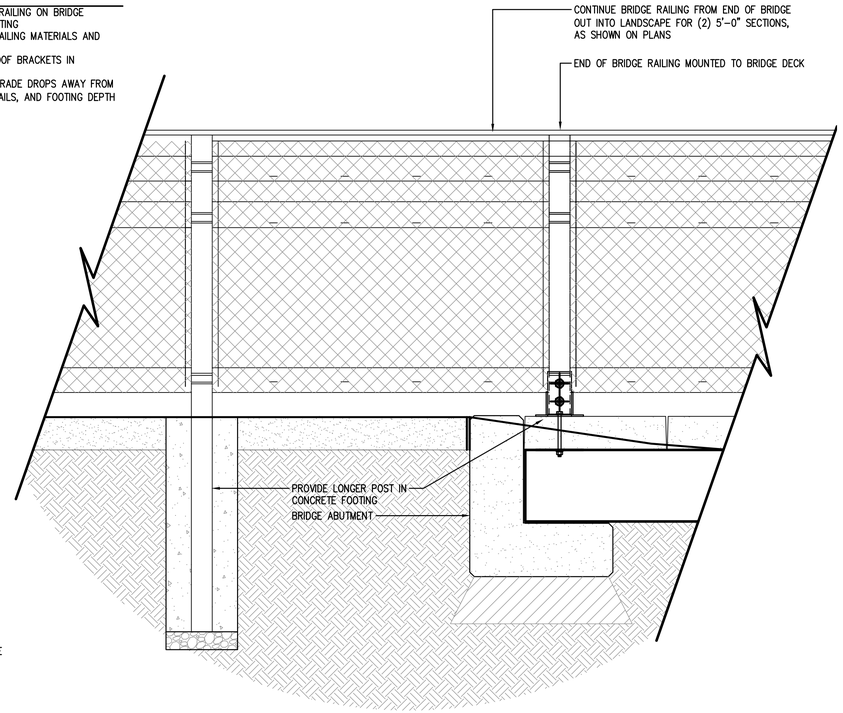

1 BRIDGE RAILING - IN LANDSCAPE

NOT TO SCALE

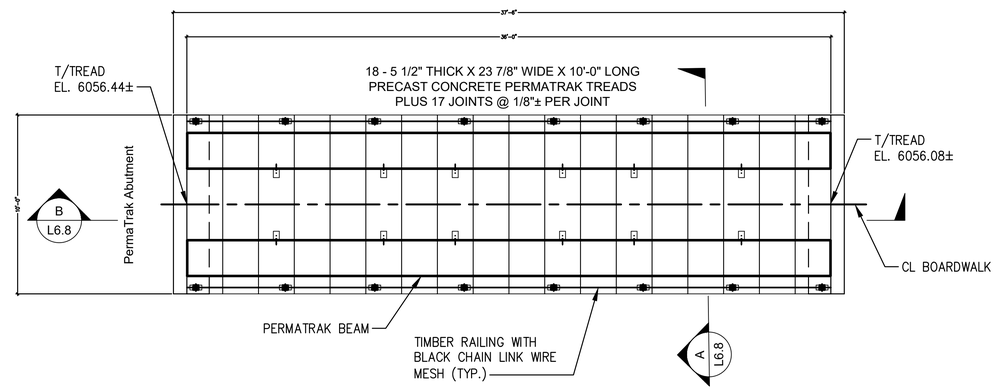

PLAN - PEDESTRIAN BRIDGE

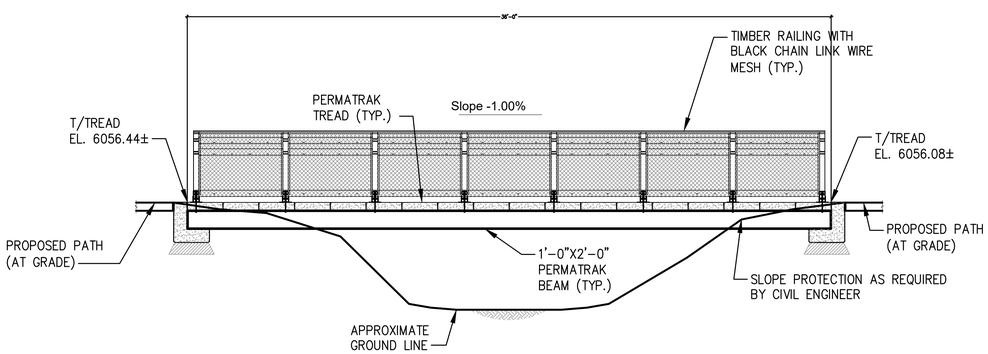

SECTION A-A - PEDESTRIAN BRIDGE

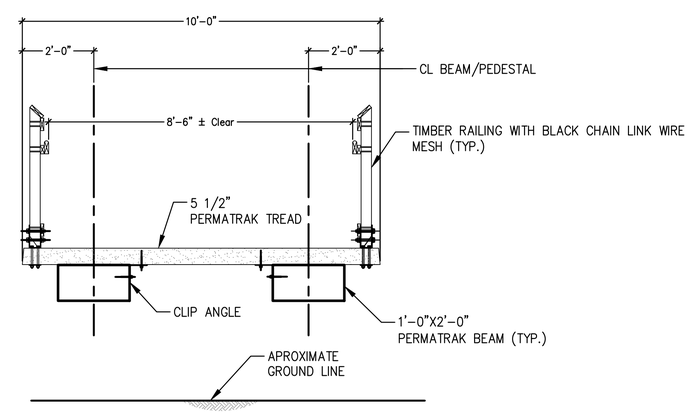

SECTION B-B - PEDESTRIAN BRIDGE

2 PEDESTRIAN BRIDGE

811
Know what's below.
Call before you dig.

DHM DESIGN
900 S. Broadway
Suite 300
Denver, CO 80209
303.892.5566
www.dhmdesign.com

REUSE OF DOCUMENT
This document is the property of DHM Design Corp. The ideas and design incorporated on this document is an instrument of professional service and shall not be used for any other project without written authorization of DHM Design Corp.

HARVIE OPEN SPACE PARK
SITE PLAN SUBMITTAL
20120 East Main Street, Parker, CO 80138

PROJECT NUMBER: 17279.00
DATE: 07.19.2022
DESIGNED: MTW
DRAWN: MTW
CHECKED: MTW
REVISIONS:
JOB DESCRIPTION: SITE PLAN SUBMITTAL
SHEET TITLE: SITE DETAILS
SCALE: AS SHOWN
SHEET NUMBER:
L6.9

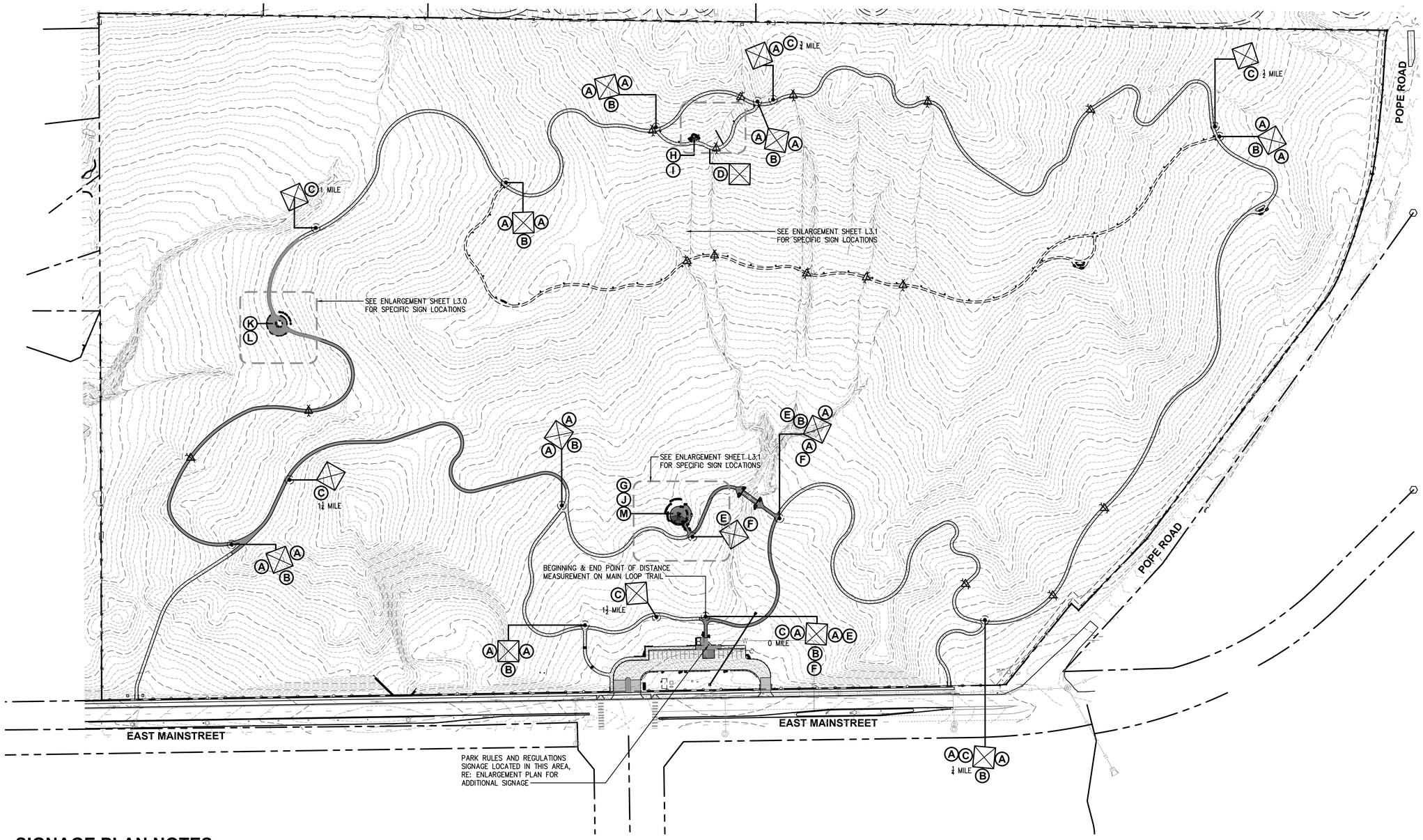

SIGNAGE PLAN NOTES:

1. SEE SITE DETAILS SHEETS FOR SIGN MOUNTING DETAILS, SEE SIGN SCHEDULES FOR IMAGES OF SIGNS
2. CONTRACTOR SHALL OBTAIN DIGITAL FILES FROM LANDSCAPE ARCHITECT TO PROVIDE TO SIGN MANUFACTURER
3. ALL SIGNS TO BE MANUFACTURED BY FOSSIL INDUSTRIES, OR APPROVED SUBSTITUTE
4. ALL SIGN LOCATIONS TO BE STAKED IN THE FIELD AFTER TRAILS AND OTHER FEATURES HAVE BEEN CONSTRUCTED, FOR FINAL APPROVAL BY TOWN OF PARKER AND LANDSCAPE ARCHITECT
5. SIGNS ON 4"x4" POSTS TO BE ALIGNED WITH TRAIL, AND INSTALLED 2'-0" FROM EDGE OF TRAIL, TYP.
6. CONTRACTOR TO REFER TO ENLARGEMENT PLAN FOR OTHER PARKING LOT (ADA PARKING AND RULES) SIGNAGE.

LEGEND

- EXISTING FENCING
- EXISTING GRAVEL
- EXISTING STORM DRAIN
- EXISTING STORM MANHOLE
- EXISTING LIGHT POLE
- EXISTING UTILITY POLE
- MISCELLANEOUS ELECTRICAL
- EXISTING FIRE HYDRANT
- EASEMENT LINE
- PROPERTY LINE
- TOPO MAJOR
- TOPO MINOR
- 6'-0" WIDE CRUSHER FINES TRAIL
- 4'-0" WIDE SOFT SURFACE TRAIL
- SUGGESTED 2'-0" WIDE SINGLE TRACK TRAIL
- WAYFINDING SIGN LOCATION MARKER
- 4"x4" WAYFINDING SIGN POST, SHOWING ORIENTATION OF POST, SIGNS TO BE ATTACHED, AND ON WHICH SIDE OF POST

INTERPRETIVE SIGNAGE SCHEDULE

A LOOP TRAIL – AHEAD	G INTERPRETIVE SIGNAGE – BISON
B LOOP TRAIL – LEFT AND RIGHT	H INTERPRETIVE SIGNAGE – FRONT RANGE
C DISTANCE MARKER – ¼ MILE INCREMENTS	I INTERPRETIVE SIGNAGE – MOUNTAINS
D DITCH CROSSING AHEAD	J INTERPRETIVE SIGNAGE – NATIVE AMERICAN
E UNIVERSALLY ACCESSIBLE (SYMBOL) ROUTE – LEFT	K INTERPRETIVE SIGNAGE – PIONEER
F UNIVERSALLY ACCESSIBLE (SYMBOL) ROUTE – RIGHT	L INTERPRETIVE SIGNAGE – RAY J. HARVIE
	M INTERPRETIVE SIGNAGE – WILDLIFE

NORTH

0 50 100 200

SCALE 1"=100'-0"

Know what's below. Call before you dig.

DHM DESIGN
900 S. Broadway
Suite 300
Denver, CO 80209
303.892.5566
www.dhmdesign.com

REUSE OF DOCUMENT
This document is the property of DHM Design Corp. The ideas and design incorporated on this document is an instrument of professional service and shall not be used for any other project without written authorization of DHM Design Corp.

HARVIE OPEN SPACE PARK

SITE PLAN SUBMITTAL

20120 East Main Street, Parker, CO 80138

PROJECT NUMBER: 17279.00
DATE: 07.19.2022
DESIGNED: MTW
DRAWN: MTW
CHECKED: MTW

REVISIONS:

JOB DESCRIPTION: SITE PLAN SUBMITTAL

SHEET TITLE: INTERPRETIVE SIGNAGE SCHEDULE

SCALE: 1"=100'-0"

SHEET NUMBER:

SG1.0

A LOOP TRAIL - AHEAD

NOT TO SCALE

B LOOP TRAIL - LEFT AND RIGHT

NOT TO SCALE

C DISTANCE MARKER - ¼ MILE INCREMENTS

(6) DIFFERENT SIGNS FOR DISTANCES ¼ MI – 1½ MI

NOT TO SCALE

D DITCH CROSSING AHEAD

NOT TO SCALE

E UNIVERSALLY ACCESSIBLE ROUTE - LEFT

NOT TO SCALE

F UNIVERSALLY ACCESSIBLE ROUTE - RIGHT

NOT TO SCALE

DHM DESIGN
900 S. Broadway
Suite 300
Denver, CO 80209
303.892.5566
www.dhmdesign.com

REUSE OF DOCUMENT
This document is the property of DHM Design Corp. The ideas and design incorporated on this document is an instrument of professional service and shall not be used for any other project without written authorization of DHM Design Corp.

HARVIE OPEN SPACE PARK

SITE PLAN SUBMITTAL

20120 East Main Street, Parker, CO 80138

PROJECT NUMBER: 17279.00
DATE: 07.19.2022

DESIGNED: MTW
DRAWN: MTW
CHECKED: MTW

REVISIONS:

JOB DESCRIPTION:
SITE PLAN SUBMITTAL

SHEET TITLE:
WAYFINDING SIGNAGE SCHEDULE

SCALE: AS SHOWN

SHEET NUMBER:

SG1.1

G **BISON**

NOT TO SCALE

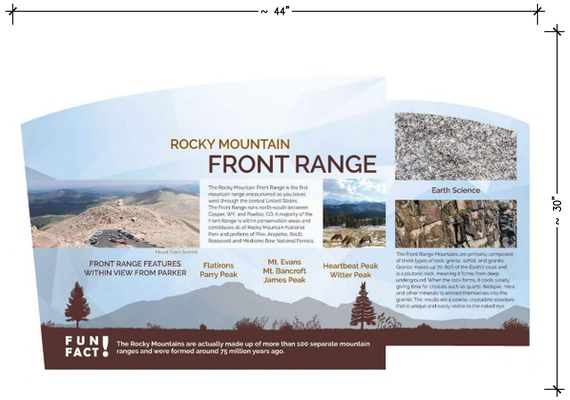

H **FRONT RANGE**

NOT TO SCALE

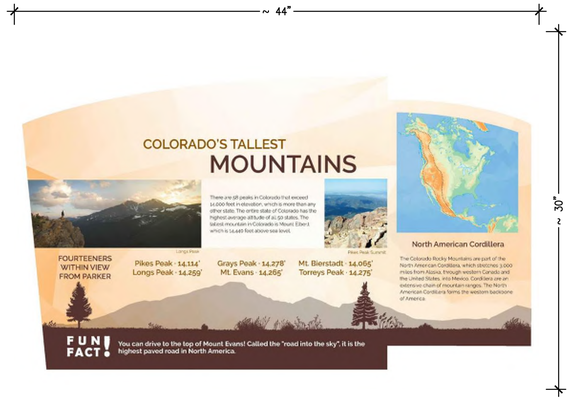

I **MOUNTAINS**

NOT TO SCALE

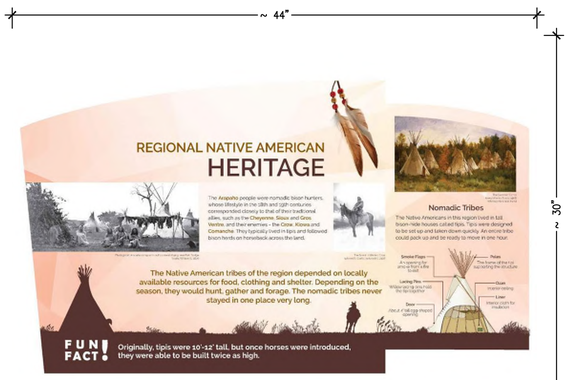

J **NATIVE AMERICAN**

NOT TO SCALE

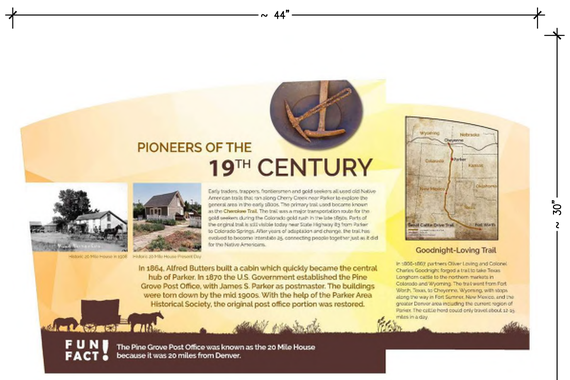

K **PIONEER**

NOT TO SCALE

L **RAY J. HARVIE**

NOT TO SCALE

M **WILDLIFE**

NOT TO SCALE

DHM DESIGN
900 S. Broadway
Suite 300
Denver, CO 80209
303.892.5566
www.dhmdesign.com

REUSE OF DOCUMENT
This document is the property of DHM Design Corp. The ideas and design incorporated on this document is an instrument of professional service and shall not be used for any other project without written authorization of DHM Design Corp.

HARVIE OPEN SPACE PARK

SITE PLAN SUBMITTAL

20120 East Main Street, Parker, CO 80138

PROJECT NUMBER: 17279.00
DATE: 07.19.2022

DESIGNED: MTW
DRAWN: MTW
CHECKED: MTW

REVISIONS:

JOB DESCRIPTION: SITE PLAN SUBMITTAL

SHEET TITLE: INTERPRETIVE SIGNAGE SCHEDULE

SCALE: AS SHOWN

SHEET NUMBER:

SG1.2