## LAND OF SUSHI

# CROWN POINT FILING NO.1 LOT 4E

LOCATED IN THE SOUTHWEST QUARTER OF SECTION 3, TOWNSHIP 6 SOUTH,
RANGE 66 WEST OF THE 6TH PRINCIPAL MERIDIAN,
CITY OF PARKER, COUNTY OF DOUGLAS, STATE OF COLORADO

## EXHIBIT

## APRIL 2023

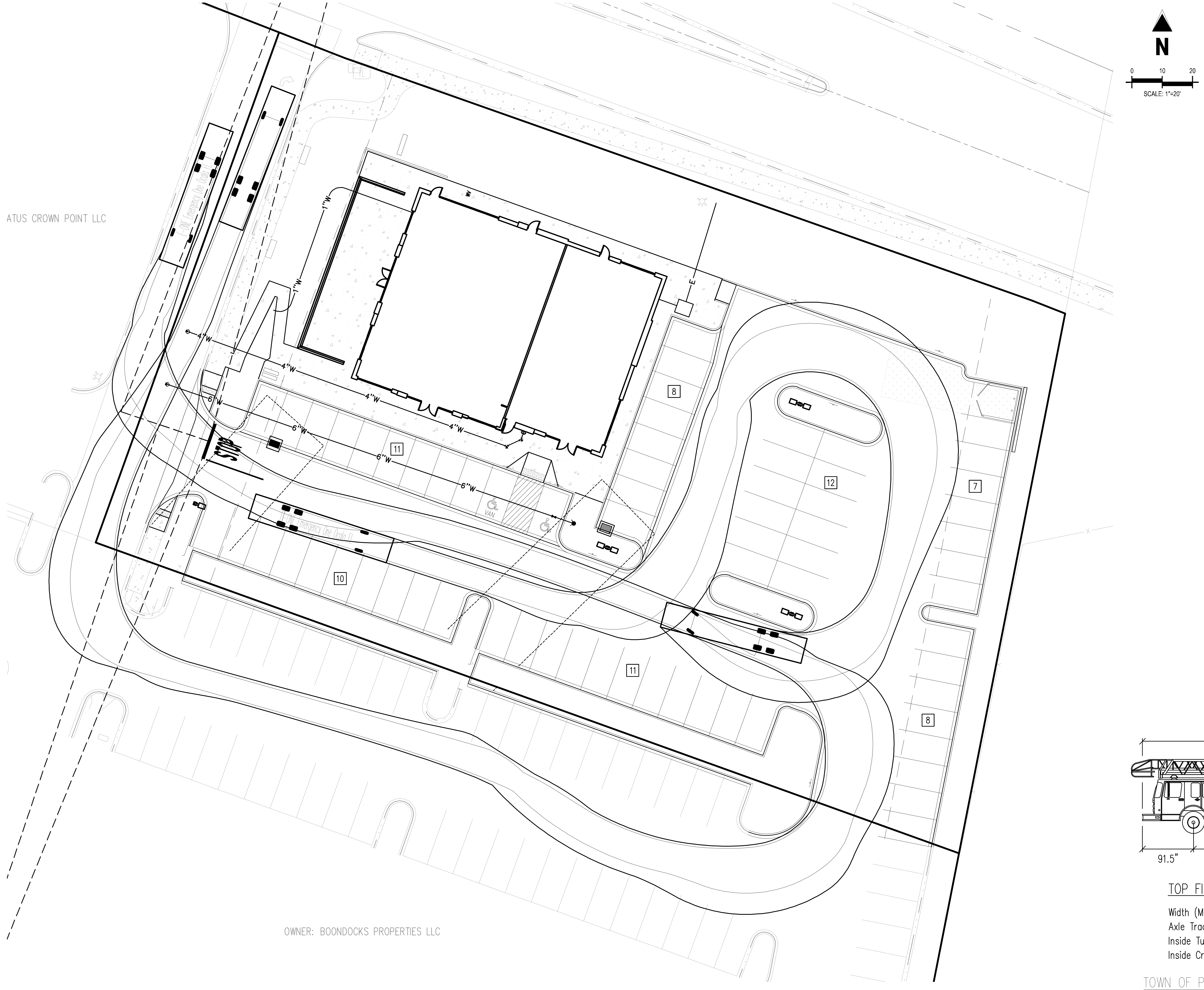

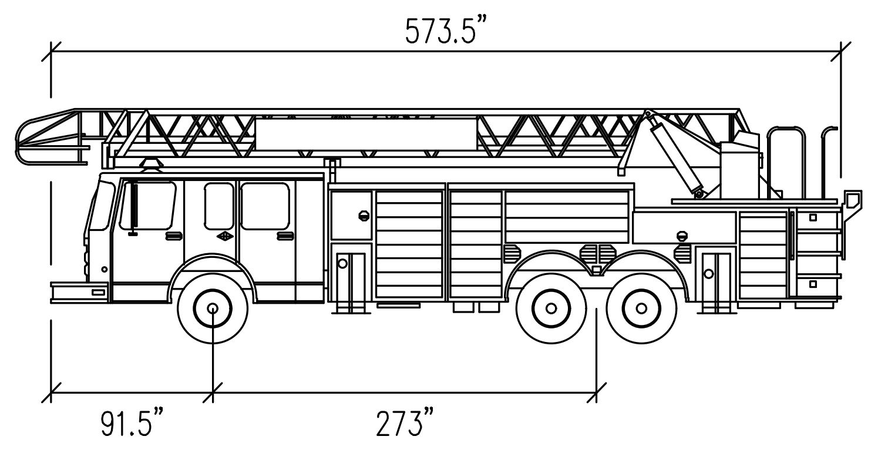

| TOP FIRE TRUCK | | FEET |
|---|---|---|
| Width (Mirror to Mirror) | : | 10.08 |
| Axle Track | : | 6.92 |
| Inside Turn Radius | : | 26.08 |
| Inside Cramp Angle | : | 40° |

TOWN OF PARKER FIRE TRUCK
NOT TO SCALE

### BENCHMARK

SOURCE BENCHMARK: DOUGLAS COUNTY SURVEY MONUMENT DESIGNATION 1109036, ELEVATION = 5897.572' NAVD88
FOUND 2" ALUMINUM CAP STAMPED "DOUGLAS COUNTY GIS 1109036".

SITE BENCHMARK #1 : ELEVATION = 5824.30' NAVD88, NO. 5 REBAR WITH PINK PLASTIC CAP STAMPED "GALLOWAY CONTROL
SITE BENCHMARK #2 : ELEVATION = 5802.90' NAVD88, CHISELED "+" IN CONCRETE

### BASIS OF BEARINGS

THE LINE BETWEEN THE WEST QUARTER CORNER OF SECTION 3, TOWNSHIP 6 SOUTH, RANGE 66 WEST OF THE 6TH PRINCIPAL MERIDIAN, AND THE CENTER QUARTER CORNER OF SAID SECTION 03, WHICH BEARS N86°26'45"E

### CAUTION – NOTICE TO CONTRACTOR

1. ALL UTILITY LOCATIONS SHOWN ARE BASED ON MAPS PROVIDED BY THE APPROPRIATE UTILITY COMPANY AND FIELD SURFACE EVIDENCE AT THE TIME OF SURVEY AND IS TO BE CONSIDERED AN APPROXIMATE LOCATION ONLY. IT IS THE CONTRACTOR'S RESPONSIBILITY TO FIELD VERIFY THE LOCATION OF ALL UTILITIES, PUBLIC OR PRIVATE, WHETHER SHOWN ON THE PLANS OR NOT, PRIOR TO CONSTRUCTION. REPORT ANY DISCREPANCIESTO THE ENGINEER PRIOR TO CONSTRUCTION.
2. WHERE A PROPOSED UTILITY CROSSES AN EXISTING UTILITY, IT IS THE CONTRACTOR'S RESPONSIBILITY TO FIELD VERIFY THE HORIZONTAL AND VERTICAL LOCATION OF SUCH EXISTING UTILITY, EITHER THROUGH POTHOLING OR ALTERNATIVE METHOD. REPORT INFORMATION TO THE ENGINEER PRIOR TO CONSTRUCTION.

811
Know what's below.
Call before you dig.

Galloway
5500 Greenwood Plaza Blvd., Suite 200
Greenwood Village, CO 80111
303.770.8884
GallowayUS.com

PRELIMINARY
NOT FOR BIDDING
NOT FOR CONSTRUCTION

COPYRIGHT
THESE PLANS ARE AN INSTRUMENT OF SERVICE AND ARE THE PROPERTY OF GALLOWAY, AND MAY NOT BE DUPLICATED, DISCLOSED, OR REPRODUCED WITHOUT THE WRITTEN CONSENT OF GALLOWAY. COPYRIGHTS AND INFRINGEMENTS WILL BE ENFORCED AND PROSECUTED.

LAND OF SUSHI
EXHIBIT

PARKER, COLORADO

| # | Date | Issue / Description | Init. |
|---|---|---|---|
| - | | | |
| - | | | |
| - | | | |
| - | | | |
| - | | | |
| - | | | |
| - | | | |
| - | | | |
| - | | | |
| - | | | |
| - | | | |
| - | | | |
| - | | | |
| - | | | |

| | |
|---|---|
| Project No: | LOS000001 |
| Drawn By: | JRC |
| Checked By: | SMB |
| Date: | ??/??/2022 |

FIRE TURNING EXHIBIT

FR-EX

H:\Land of Sushi\Parker, CO_LOS000001_Cottonwood Drive\0CIV\7-Exhibit\LOS01_FireTurning.dwg - Matthew Pepin - 2015-04-16