Development Review Division

Community Development Department: *Town Hall / 20120 East Mainstreet Parker, CO 80138* **Phone:** *303.841.2332* **Fax:** *303.841.3223*

M E M O R A N D U M

TO: **Robert Palmer, Strategic Land Solutions, Inc.**

FROM: **Cynthia Thye, Planner I**

DATE: **November 6, 2025**

SUBJECT: **SP24-012: Parker Central Area F5 L2 B1 - McDonalds– Site Plan Amendment**
Review Comments 03

Listed below are the Planning Division's comments related to your land use application, which must be responded to. If you wish to discuss a comment, please contact your Case Planner. Upon resubmittal, please sign and return this memo. A follow-up meeting with the reviewing agencies can be scheduled to provide additional guidance by contacting the Case Planner.

TOWN OF PARKER PLANNING DEPARTMENT CASE PLANNER: Cynthia Thye
EMAIL: cthye@parkeronline.org
PHONE: 303.805.3334

GENERAL PROJECT COMMENTS:

1. The Planning Division references certain sections of the Parker 2035 Master Plan, the Land Development Ordinance (LDO) and the Development Design Standards. Copies of these documents are available at:
   Parker 2035 Master Plan
   Development Design Standards
   Land Development Ordinance

2. The Planning Division has made every effort to make this comment letter as comprehensive as possible. However, additional comments that have not been provided as part of this comment letter may be identified as part of future submittals, based on revisions to the project.

3. Please contact the referral agencies if you have questions regarding their review comment(s).

4. A redlined plan is included with this memorandum and is intended to supplement and clarify the review comments of this memorandum.

5. Final Plans submitted to the Building Department, Engineering Department and Parker Water and Sanitation District **must be exactly the same as the approved Site Plan set**.

6. The Town of Parker has implemented a naming convention for all applications. For all future documents that are uploaded to TRAKiT please ensure the submittal round is first, the name of the document is second and the name of the project is third. Staff will not refer the application out with this naming convention.
   Example: "02" or "Second Submittal"

7. **Prairie Dog Management:** The Town's current land development ordinance section 13.10.250 - Prairie Dog Management requires applicants/developers to make a good faith effort to have any prairie dogs on site relocated. Documentation of this effort will be a condition of the land use application approval/site development and a certificate of compliance will be required prior to issuance of the grading permit. If relocation of the prairie dogs is not available, humane extermination may be considered. Prairie Dog management should begin as early as possible during the review process. Please coordinate with staff.

8. **Utility transformers:** Pursuant to section 13.10.090- Utilities of the Town of Parker Land Development Ordinance all on-site utilities serving a single use shall be placed underground. On-site utilities for the provision of service to nonresidential use(s) such as pedestals, transformers or other equipment may be placed above ground in a rear-yard or side-yard utility easement only. Transformers and other utility equipment associated with the application shall be shown on the approved Site Plan. Please work with staff to determine the correct placement for this equipment.

Site Plan Comments:

1. **Please refer to the redlines for additional comments/clarification.**

   Comment Addressed: ☐ Yes ☐ No
   Response:

2. **Sidewalk needs to be 10 feet Per DDS VIII.B.1. "Pedestrian-friendly sidewalks located on any building side with a public entrance shall be a minimum width of 10 feet and shall span the entire length of the building. "Drive aisle is wide enough to all increase in sidewalk width.**

   Comment Addressed: ☐ Yes ☐ No
   Response:

3. **Transformer needs to be moved per LDO 13.08.120(c)(4)b - On site utilities and equipment, including service line to lot, for the provision of service to nonresidential use(s) shall meet the following requirements: On site utilities and equipment may be placed above ground in a rear yard or side yard only.**

   Comment Addressed: ☐ Yes ☐ No
   Response:

4. **Provide a cut sheet for image of bike racks, color, and materials.**

Comment Addressed: ☐ Yes ☐ No
Response:

Photometric Plan Comments:

1. **Update table. Per LDO Administrative Manual Section B.2.(f). Photometric Plan needs to include a table with the following information: light fixture, name, label, height, fixture color, total lumens, lighting type - CCT. CCT shall be below 5001 Kelvin.**

Comment Addressed: ☐ Yes ☐ No
Response:

Landscape Plan Comments:

1. **Per LDO Administrative Manual, use this section to show "enhanced landscaping" as noted on site plan.**

Comment Addressed: ☐ Yes ☐ No
Response:

Elevation/Design Comments:

1. **Everything Community Development is reviewing needs to be on these plans. Show guard rail on elevations and this site plan.**

Comment Addressed: ☐ Yes ☐ No
Response:

2. **Per DDS X.A.2.c.i. 1-2, show transparency calculations for all facades.**

Comment Addressed: ☐ Yes ☐ No
Response:

3. **Show wall-mounted electrical equipment, add note that it will be painted to match adjacent wall.**

   Comment Addressed: ☐ Yes ☐ No

   Response:

4. **Signage - Remove or note that not part of this Site Plan and will be approved under a separate CD application.**

   Comment Addressed: ☐ Yes ☐ No

   Response:

5. **Label material on elevations.**

   Comment Addressed: ☐ Yes ☐ No

   Response:

6. **Provide a material board to the Planning Division Office.**

   Comment Addressed: ☐ Yes ☐ No

   Response:

7. **Note percent of materials on material legend.**

   Comment Addressed: ☐ Yes ☐ No

   Response:

8. **Need vertical massing break(s). Per DDS X.A.3.b.iii.3). Buildings over 100 feet in length shall require a vertical massing break at a distance of 25 to 50 feet. See McDonalds SP21-067 at Chambers Road and Hess.**

Comment Addressed: ☐ Yes ☐ No
Response:

OUTSIDE REFERRAL AGENCY COMMENTS

Please address all outside referral agency comments with a written response. The following agencies have responded – revisions required or denied:

- Town of Parker – Construction Plans, Environmental
- Town of Parker – Construction Plans, Civil
- FLS – South Metro Fire and Rescue
- IREA
- Public Service Company of Colorado
- Traffic Impact Study

Attached to the Planning comments is a printout of all review comments on the project. These comments include all comments from the first submittal to the most recent. They are organized from oldest to most recent. Therefore, the comments from this referral can be found at the end of the document.

Comment(s) Addressed: ☐ Yes ☐ No
Response:

_____ _____
Property Owner Date

_____ _____
Project Representative Date

SITE DEVELOPMENT PLAN
MCDONALDS REMODEL AT PARKER CENTRAL AREA
FILING NO. 5, BLOCK 1, LOT 2

PARKER CENTRAL AREA FILING NO. 5, BLOCK 1, LOT 2, TOWN OF PARKER,
COUNTY OF DOUGLAS, STATE OF COLORADO.
ADDRESS: 10950 S. PARKER ROAD

LEGAL DESCRIPTION:

LOT 2, BLOCK 1, PARKER CENTRAL AREA FILING NO. 5, ACCORDING TO THE RECORDED PLAT THEREOF, COUNTY OF DOUGLAS, STATE OF COLORADO.

LOT 2, BLOCK 1, REPLAT OF PARKER CENTRAL AREA, FILING NO. 5 PER DOUGLAS COUNTY ASSESSORS OFFICE

BENCHMARK:

BENCHMARK: DOUGLAS COUNTY CONTROL MONUMENT 1090035 3.25" ALUMINUM CAP STAMPED "DOUGLAS COUNTY GIS" LOCATED ON THE WEST SIDE OF PARKER ROAD ACROSS FOR THE NORTHEAST CORNER OF 10841-B S. PARKER ROAD.

ELEVATION: 5883.72 FEET (NAVD 1988 DATUM).

THE CONTOURS SHOWN HEREON ARE AT ONE (1) FOOT INTERVALS.

BASIS OF BEARINGS:

BEARINGS ARE BASED ON THE WEST LINE OF THE NE 1/4 OF SECTION 22, TOWNSHIP 6 SOUTH, RANGE 66 WEST, OF THE 6TH PRINCIPAL MERIDIAN BEARING N00°13'03"W BOUND BY THE MONUMENTS SHOWN HEREON.

FLOODPLAIN:

THE SUBJECT PROPERTY IS SITUATED IN FLOOD ZONE "X" ACCORDING TO FLOOD INSURANCE RATE MAP (FIRM) COMMUNITY PANEL NO. 08035C0069F WITH AN EFFECTIVE DATE OF SEPTEMBER 30, 2005. NO OFFICE CALCULATIONS OR FIELD SURVEYING WAS PERFORMED TO DETERMINE THIS INFORMATION.

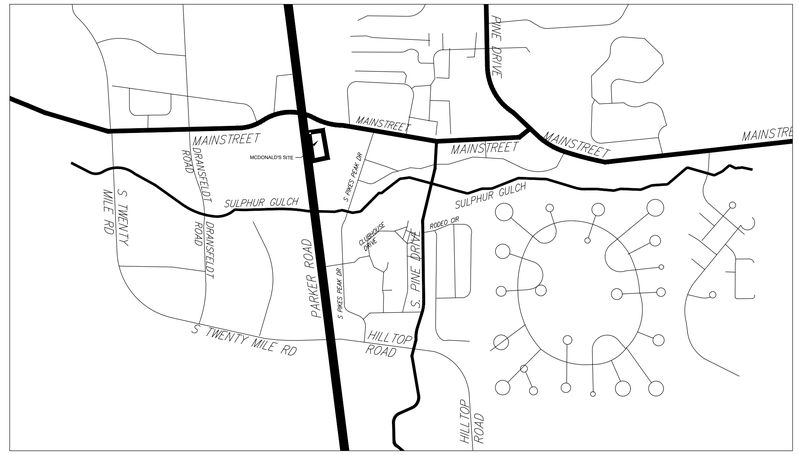

VICINITY MAP

SCALE: 1"=1000'

PROJECT CONTACTS:

DEVELOPER
MCDONALD'S CORPORATION
2595 PONDEROSA ROAD
FRANKTOWN, CO 80116
PHONE: 206.234.4374
CONTACT:Mr. ROBERT YAGUSESKY

APPLICANT
STRATEGIC LAND SOLUTIONS
2595 PONDEROSA ROAD
FRANKTOWN, CO 80116
PHONE:720.384.7661
CONTACT: ROBERT PALMER, P.E.

CIVIL ENGINEER
STRATEGIC LAND SOLUTIONS
2595 PONDEROSA ROAD
FRANKTOWN, CO 80116
PHONE:720.384.7661
CONTACT: ROBERT PALMER, P.E.

ARCHITECT
ARRIS ARCHITECTURE
3436 NEW CASTLE DR.
LOVELAND, CO 80538
PHONE:970.988.8302

LANDSCAPE ARCHITECT
NATURAL DESIGN SOLUTIONS, INC.
5539 COLT DRIVE
LONGMONT, CO 805027
PHONE:303.443.0388
CONTACT: MR. NEIL MCLANE

REGULATORY CONTACTS
TOWN OF PARKER
COMMUNITY DEVELOPMENT DEPARTMENT
20120 E. MAINSTREET
PARKER, CO 80138
CONTACT: PATRICK MULREADY (SENIOR PLANNER)
PHONE:303.841.2332

ENGINEERING DEPARTMENT
20120 E. MAINSTREET
PARKER, CO 80138
CONTACT: TOM WILLIAMS (MANAGER OF ENGINEERING AND STORMWATER)
PHONE:303.805.3220

WATER/SANITARY SEWER
PARKER WATER AND SANITATION DISTRICT
18100 E WOODMAN DRIVE
PARKER, CO 80134
PHONE:303-841-4627

FIRE/LIFE SAFETY
SOUTH METRO FIRE DEPARTMENT/TOWN OF PARKER
20120 E. MAINSTREET
PARKER, CO 80138
CONTACT: RANDY CAPRA
PHONE:303.805.3163

ELECTRIC
INTERMOUNTAIN RURAL ELECTRIC ASSOCIATION (REA)
5496 N. U.S. HIGHWAY 85
SEDALIA, CO 80135
CONTACT: REN OSTERWALD
PHONE:720.733.5582

GAS
XCEL ENERGY
DENVER, CO 80202
PHONE:800.895.2999

SITE INFORMATION:

ADDRESS:	10950 S. PARKER ROAD
DEVELOPER/OWNER:	MCDONALD'S CORPORATION
ZONING:	DOWNTOWN EAST
LOT SIZE:	30,535 S.F. (0.70 ACRE)
EX. LAND USE:	FAST FOOD RESTAURANT
PROP. LAND USE:	FAST FOOD RESTAURANT
LANDSCAPING REQUIRED/PROPOSED:	10% REQUIRED (3,054 S.F.) / 21% PROPOSED (6,412 S.F.)
GROSS FLOOR AREA EXISTING:	GROSS FLOOR AREA:6,088 S.F.
GROSS FLOOR AREA PROPOSED:	GROSS FLOOR AREA: 6,072 S.F.
PROPOSED BUILDING HEIGHT:	23'-6" TO TOP OF PARAPET
REQUIRED PARKING (1 PER 300 S.F. NLA):	21-SPACES
PROVIDED PARKING:	28-SPACES
ACCESSIBLE SPACES REQUIRED/PROVIDED:	2-REQUIRED / 2-PROVIDED
VAN ACCESSIBLE SPACES REQUIRED/PROVIDED:	1-REQUIRED/2-PROVIDED
BICYCLE PARKING REQUIRED/PROVIDED:	4-REQUIRED/4-PROVIDED

LIST OF DRAWINGS

TO1.0	TITLE SHEET
EX1.0	EXISTING CONDITIONS
DM1.0	DEMOLITION PLAN
C1.0	SITE PLAN
C1.1	FIRE DEPARTMENT ACCESS
C2.0	GRADING PLAN
C3.0	UTILITY PLAN
LI1.0	PHOTOMETRIC PLAN
LS1.0	LANDSCAPE PLANS
LS1.1	TREE CONSERVATION PLAN
IRR1.0	IRRIGATION PLAN
IRR2.0	IRRIGATION DETAILS & NOTES
A2.01	BUILDING FLOOR PLAN
A3.01	EXTERIOR ELEVATIONS
A3.02	EXTERIOR ELEVATIONS
TE1.0	TRASH ENCLOSURE
TE1.1	TRASH ENCLOSURE
TE1.2	TRASH ENCLOSURE

LEGEND

NOT ALL SYMBOLS APPEAR ON SHEET

- EXISTING CURB AND GUTTER TO REMAIN
- EXISTING CURB AND GUTTER TO BE REMOVED
- NEW CURB AND GUTTER, SEE SCHEDULE NOTE 3.
- NEW STRIPING (4" WHITE)
- EXISTING CONCRETE
- EXISTING PROPERTY LINE (APPROX.-NOT SURVEYED)
- EXISTING SANITARY SEWER
- EXISTING GAS
- EXISTING ELECTRICAL
- EXISTING WATER
- EXISTING TELEPHONE
- EXISTING STORM DRAIN
- EXISTING STRIPING TO BE REMOVED
- EXISTING BOLLARD

FL	FLOW LINE
GB	GRADE BREAK
HP	HIGH POINT
ME	MATCH EXISTING
P	PAVEMENT
TC	TOP OF CURB
W	SIDEWALK

- PROPOSED 4,000 PSI CONCRETE
- PROPOSED LANDSCAPING
- DEMOLITION AREA

Know what's **below.**
Call before you dig.

NO.	DATE	REVISION DESCRIPTION

CIVIL ENGINEERING CONSULTANT:

Strategic Land Solutions, Inc.
Civil Engineering - Land Planning - Entitlements
2595 PONDEROSA ROAD
FRANKTOWN, CO 80116
720.384.7661 Phone
rpalmer@strategicls.net
Robert J. Palmer, PE
President

PREPARED UNDER THE DIRECT SUPERVISION OF:

SEAL: COLORADO REGISTERED ROBERT J. PALMER 36320 PROFESSIONAL ENGINEER

BY Robert J. Palmer, PE
Licensed Professional Engineer (CO PE #36320),
AS PRESIDENT FOR STRATEGIC LAND SOLUTIONS, INC.

THESE PLANS AND SPECIFICATIONS ARE THE PROPERTY OF McDONALD'S CORPORATION AND SHALL NOT BE REPRODUCED WITHOUT THEIR WRITTEN PERMISSION.

OFFICE: ROCKY MOUNTAIN REGION
ADDRESS: 4643 S. ULSTER STREET, SUITE 1300, DENVER, COLORADO 80237

STREET ADDRESS: 10950 S. PARKER ROAD
CITY: PARKER
STATE: COLORADO
COUNTY: DOUGLAS
STATE STORE #: 50162
NATIONAL #: 7462
REGIONAL DWG. NO: -

SCALE:	1"=20'	McD RE:	BOWAN
DATE:	10/08/2025	McD P/CM:	MANN
DESIGNED BY:	RJP		
DRAWN BY:	RJP	FILE NAME:	CURRENT.DWG
CHECKED BY:	RJP	SLS JN:	14-001-47

DRAWING TITLE: TITLE SHEET

SHEET NO: TO1.0

SITE DEVELOPMENT PLAN
MCDONALDS REMODEL AT PARKER CENTRAL AREA
FILING NO. 5, BLOCK 1, LOT 2

PARKER CENTRAL AREA FILING NO. 5, BLOCK 1, LOT 2, TOWN OF PARKER,
COUNTY OF DOUGLAS, STATE OF COLORADO.
ADDRESS: 10950 S. PARKER ROAD

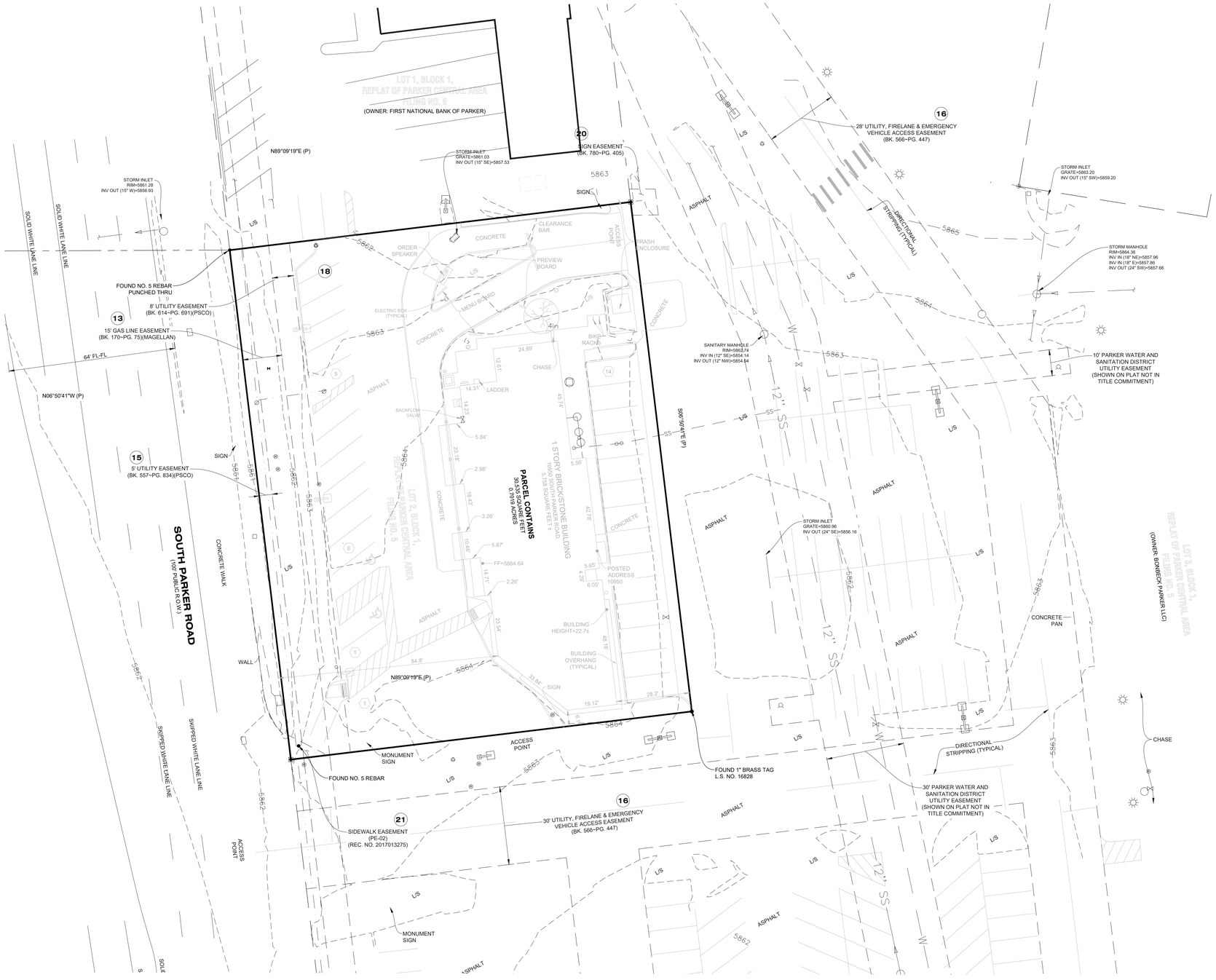

NOTES CORRESPONDING TO SCHEDULE B - SECTION 2 OF TITLE COMMITMENT:

(8) ANY EXISTING LEASES OR TENANCIES, AND ANY AND ALL PARTIES CLAIMING BY, THROUGH OR UNDER SAID LESSEES.
(NOT ADDRESSED.)

(9) RIGHT OF WAY FOR DITCHES OR CANALS CONSTRUCTED BY THE AUTHORITY OF THE UNITED STATES AS RESERVED IN UNITED STATES PATENT,
RECORDED DATE: AUGUST 04, 1900; RECORDING NO.: BOOK 12, PAGE 149.
(APPLIES TO SUBJECT PROPERTY, HOWEVER CONTAINS NO PLOTTABLE ITEMS.)

(10) THE EFFECT OF QUIT CLAIM DEED FROM PARKER CENTER ASSOCIATES, LTD., A COLORADO LIMITED PARTNERSHIP TO PARKER WATER AND SANITATION DISTRICT,
RECORDED DATE: MARCH 15, 1984; RECORDED NO.: BOOK 512, PAGE 235.
(APPLIES TO SUBJECT PROPERTY, HOWEVER CONTAINS NO PLOTTABLE ITEMS.)

(11) THE EFFECT OF QUIT CLAIM DEED FROM PARKER CENTER ASSOCIATES, LTD., A COLORADO LIMITED PARTNERSHIP TO PARKER WATER AND SANITATION DISTRICT,
RECORDED DATE: MARCH 29, 1984; RECORDED NO.: BOOK 513, PAGE 938.
(APPLIES TO SUBJECT PROPERTY, HOWEVER CONTAINS NO PLOTTABLE ITEMS.)

(12) EASEMENT(S) FOR THE PURPOSE(S) SHOWN BELOW AND RIGHTS INCIDENTAL THERETO, AS GRANTED IN A DOCUMENT:
GRANTED TO: COLORADO TELEPHONE COMPANY; PURPOSE: UTILITY EASEMENT; RECORDED DATE: DECEMBER 19, 1905; RECORDING NO.: BOOK 34, PAGE 334 AND ASSIGNED TO MOUNTAIN STATES TELEPHONE AND TELEGRAPH COMPANY, RECORDING DATE: JULY 31, 1911; RECORDING NO.: BOOK 39, PAGE 547.
(APPLIES TO SUBJECT PROPERTY, HOWEVER CONTAINS NO PLOTTABLE ITEMS.)

(13) RIGHT OF WAY TO WYCO PIPE LINE COMPANY, A DELAWARE CORPORATION, AS CONTAINED IN INSTRUMENT RECORDED MAY 20, 1966 IN BOOK 170, PAGE 75, PROVIDING AS FOLLOWS:
TO CONSTRUCT, MAINTAIN, INSPECT, OPERATE, PROTECT, REPAIR, REPLACE, CHANGE THE SIZE OF, OR REMOVE A PIPE LINE OR PILE LINES, FOR THE TRANSPORTATION OF OIL, GAS AND THE PRODUCTS THEREOF. TOGETHER WITH THE RIGHT OF INGRESS AND EGRESS TO AND FROM SAID LAND OR LINES OR ANY OF THEM, FOR THE PURPOSES AFORESAID. NOTE: SAID EASEMENT AFFECTS THE WESTERLY OR FRONT 15 FEET TO SUBJECT PROPERTY AS SHOWN ON THE RECORDED PLAT.
(APPLIES TO SUBJECT PROPERTY, PLOTTABLE ITEMS ARE SHOWN HEREON.)

(15) NOTES, EASEMENTS AND RESTRICTIONS AS SHOWN ON PLAN UNIT DEVELOPMENT FOR PARKER PLANNED COMMUNITY DEVELOPMENT PLAN,
RECORDING DATE: MAY 11, 1981; RECORDING NO.: RECEPTION NO. 268385.
(APPLIES TO SUBJECT PROPERTY, HOWEVER CONTAINS NO PLOTTABLE ITEMS.)

(16) EASEMENT(S) FOR THE PURPOSE(S) SHOWN BELOW AND RIGHTS INCIDENTAL THERETO, AS GRANTED IN A DOCUMENT:
GRANTED TO: PUBLIC SERVICE COMPANY OF COLORADO; PURPOSE: UTILITY EASEMENT; RECORDING DATE: JANUARY 11, 1985; RECORDING NO.: BOOK 557, PAGE 834.
(APPLIES TO SUBJECT PROPERTY, PLOTTABLE ITEMS ARE SHOWN HEREON.)

(17) RESTRICTIVE COVENANTS, WHICH DO NOT CONTAIN A FORFEITURE OR REVERTER CLAUSE,
RECORDING DATE: MARCH 21, 1985; RECORDING NO.: BOOK 566, PAGE 447. AGREEMENT AND ESTOPPEL CERTIFICATE AS RECORDED OCTOBER 18, 1994 AT RECEPTION NO. 9453456.
(APPLIES TO SUBJECT PROPERTY, PLOTTABLE ITEMS ARE SHOWN HEREON.)

(18) TERMS, CONDITIONS, PROVISIONS, BURDENS AND OBLIGATIONS AS SET FORTH IN SIGN EASEMENT AGREEMENT AS RECORDED NOVEMBER 18, 2009 AT RECEPTION NO. 2009087901.
(DOES NOT APPLY TO SUBJECT PROPERTY.)

(19) UTILITY EASEMENT AS GRANTED TO PUBLIC SERVICE COMPANY OF COLORADO IN INSTRUMENT RECORDED DECEMBER 18, 1985, IN BOOK 614 AT PAGE 691.
(APPLIES TO SUBJECT PROPERTY, PLOTTABLE ITEMS ARE SHOWN HEREON.)

(20) TERMS, CONDITIONS, PROVISIONS, RESTRICTIONS, BURDENS AND OBLIGATIONS AS SET FORTH IN USE RESTRICTION AS RECORDED JANUARY 14, 2004 AT RECEPTION NO. 2004005956.
(APPLIES TO SUBJECT PROPERTY, HOWEVER CONTAINS NO PLOTTABLE ITEMS.)

(21) TERMS, CONDITIONS, PROVISIONS, BURDENS, RESTRICTIONS, EASEMENTS AND OBLIGATIONS AS CONTAINED IN EASEMENT AGREEMENT AS RECORDED MARCH 10, 1988 IN BOOK 780 AT PAGE 405.
(APPLIES TO SUBJECT PROPERTY, PLOTTABLE ITEMS ARE SHOWN HEREON.)

(22) TERMS, CONDITIONS, PROVISIONS, AGREEMENTS AND OBLIGATIONS CONTAINED IN THE PUBLIC SIDEWALK EASEMENT AGREEMENT AS SET FORTH BELOW:
RECORDING DATE: FEBRUARY 24, 2017; RECORDING NO.: RECEPTION NO. 2017013275.
(APPLIES TO SUBJECT PROPERTY, PLOTTABLE ITEMS ARE SHOWN HEREON.)

TERMS, CONDITIONS, PROVISIONS, BURDENS AND OBLIGATIONS AUTOMATED TELECOM TECHNOLOGY INC. PAYPHONE LOCATION LEASE AGREEMENT AS RECORDED NOVEMBER 8, 1996 AT RECEPTION NO. 9662769.
(APPLIES TO SUBJECT PROPERTY, HOWEVER CONTAINS NO PLOTTABLE ITEMS.)

NO.	DATE	REVISION DESCRIPTION

CIVIL ENGINEERING CONSULTANT:
Strategic Land Solutions, Inc.
Civil Engineering - Land Planning - Entitlements
2595 PONDEROSA ROAD
FRANKTOWN, CO 80116
720.384.7661 Phone
rpalmer@strategicls.net
Robert J. Palmer, PE
President

PREPARED UNDER THE DIRECT SUPERVISION OF:
SEAL: COLORADO REGISTERED ROBERT J. PALMER 36320 PROFESSIONAL ENGINEER
BY Robert J. Palmer, PE
Licensed Professional Engineer (CO PE #36320),
AS PRESIDENT FOR STRATEGIC LAND SOLUTIONS, INC.

McDonald's®

THESE PLANS AND SPECIFICATIONS ARE THE PROPERTY OF MCDONALD'S CORPORATION AND SHALL NOT BE REPRODUCED WITHOUT THEIR WRITTEN PERMISSION.

OFFICE: ROCKY MOUNTAIN REGION
ADDRESS: 4643 S. ULSTER STREET, SUITE 1300, DENVER, COLORADO 80237

STREET ADDRESS: 10950 S. PARKER ROAD
CITY: PARKER
STATE: COLORADO
COUNTY: DOUGLAS
STATE STORE #: 50162
NATIONAL #: 7462
REGIONAL DWG. NO: -

SCALE: 1"=20'	McD RE: BOWAN
DATE: 10/08/2025	McD P/CM: MANN
DESIGNED BY: RJP	
DRAWN BY: RJP	FILE NAME: CURRENT.DWG
CHECKED BY: RJP	SLS JN: 14-001-47

DRAWING TITLE: EXISTING CONDITIONS

SHEET NO: EX1.0

811 Know what's below. Call before you dig.

SITE DEVELOPMENT PLAN
MCDONALDS REMODEL AT PARKER CENTRAL AREA
FILING NO. 5, BLOCK 1, LOT 2

PARKER CENTRAL AREA FILING NO. 5, BLOCK 1, LOT 2, TOWN OF PARKER,
COUNTY OF DOUGLAS, STATE OF COLORADO.
ADDRESS: 10950 S. PARKER ROAD

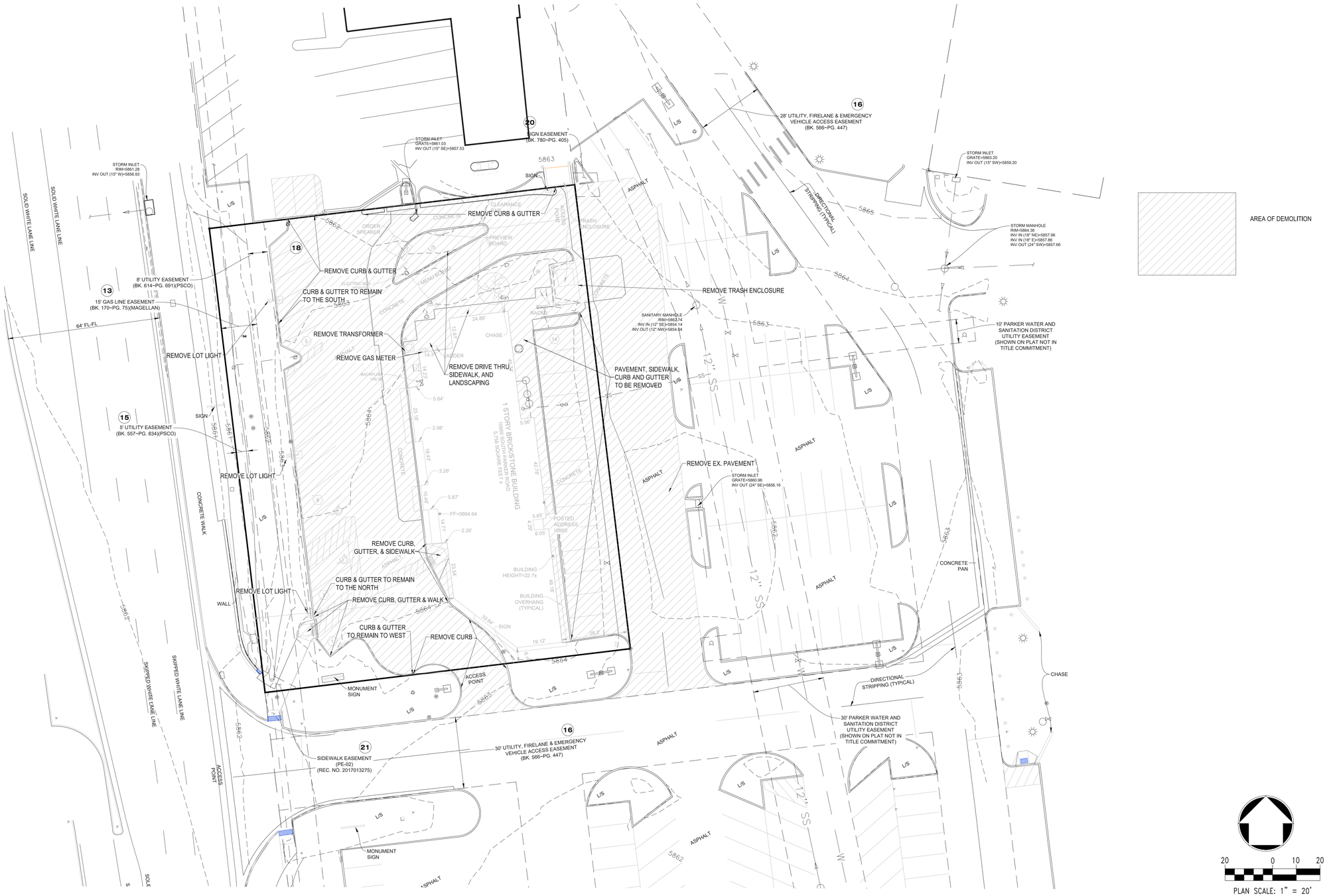

NO.	DATE	REVISION DESCRIPTION

CIVIL ENGINEERING CONSULTANT:

Strategic Land Solutions, Inc.
Civil Engineering - Land Planning - Entitlements
2595 PONDEROSA ROAD
FRANKTOWN, CO 80116
720.384.7661 Phone
rpalmer@strategicls.net
Robert J. Palmer, PE
President

PREPARED UNDER THE DIRECT SUPERVISION OF:

SEAL: COLORADO REGISTERED ROBERT J. PALMER 36320 PROFESSIONAL ENGINEER

BY Robert J. Palmer, PE
Licensed Professional Engineer (CO PE #36320),
AS PRESIDENT FOR STRATEGIC LAND SOLUTIONS, INC.

McDonald's®

THESE PLANS AND SPECIFICATIONS ARE THE PROPERTY OF McDONALD'S CORPORATION AND SHALL NOT BE REPRODUCED WITHOUT THEIR WRITTEN PERMISSION.

OFFICE: ROCKY MOUNTAIN REGION
ADDRESS: 4643 S. ULSTER STREET, SUITE 1300, DENVER, COLORADO 80237

STREET ADDRESS: 10950 S. PARKER ROAD
CITY: PARKER
STATE: COLORADO
COUNTY: DOUGLAS
STATE STORE #: 50162
NATIONAL #: 7462
REGIONAL DWG. NO: -

SCALE:	1"=20'	McD RE:	BOWAN
DATE:	10/08/2025	McD P/CM:	MANN
DESIGNED BY:	RJP		
DRAWN BY:	RJP	FILE NAME:	CURRENT.DWG
CHECKED BY:	RJP	SLS JN: 14-001-47	

DRAWING TITLE:
DEMOLITION PLAN

SHEET NO:
DM1.0

811 Know what's below. Call before you dig.

FIRE LANE SIGN NOTE:
REFERENCE THE CIVIL ENGINEERING DRAWING FOR
FIRE LANE SIGN SPECIFICATIONS AND DETAILS.

SITE DEVELOPMENT PLAN
MCDONALDS REMODEL AT PARKER CENTRAL AREA
FILING NO. 5, BLOCK 1, LOT 2

PARKER CENTRAL AREA FILING NO. 5, BLOCK 1, LOT 2, TOWN OF PARKER,
COUNTY OF DOUGLAS, STATE OF COLORADO.
ADDRESS: 10950 S. PARKER ROAD

2.Sidewalk needs to be 10 feet Per DDS VIII.B.1. "Pedestrian-friendly sidewalks located on any building side with a public entrance shall be a minimum width of 10 feet and shall span the entire length of the building. "Drive aisle is wide enough to all increase in sidewalk width.

Need to upload fully executed, recorded document into eTRAKiT prior to Site Plan Approval.

This needs to be moved per LDO 13.08.120(c)(4)b - On site utilities and equipment, including service line to lot, for the provision of service to nonresidential use(s) shall meet the following requirements: On site utilities and equipment may be placed above ground in a rear yard or side yard only.

Provide a cut sheet for image of bike racks, color, and materials.

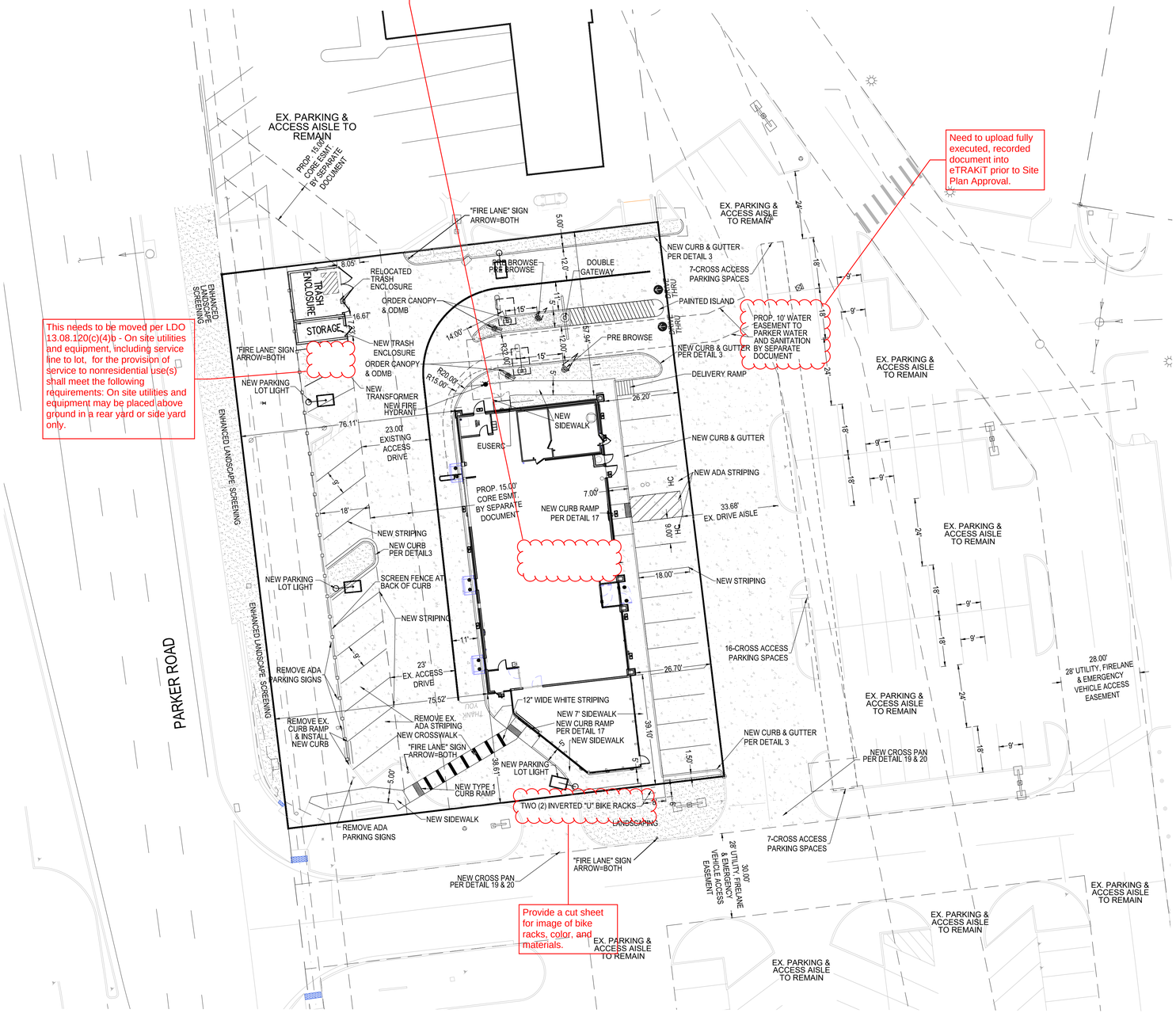

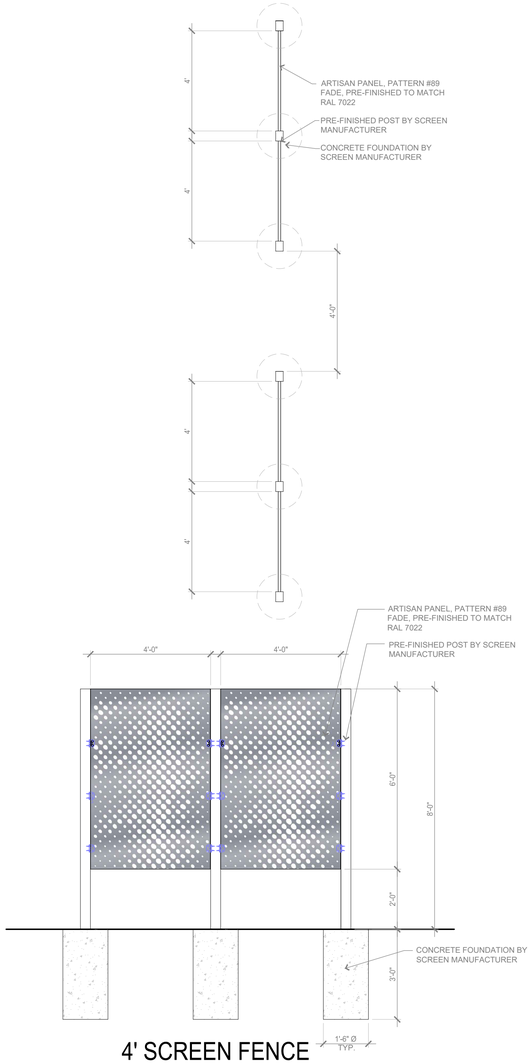

4' SCREEN FENCE

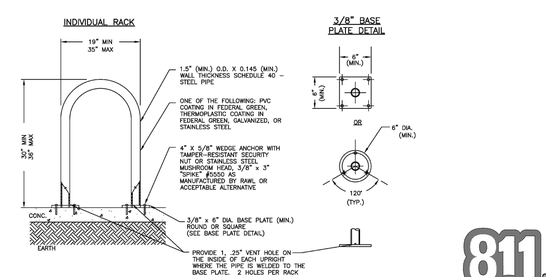

NOTES:
1. RACK SHALL NOT BE WELDED IN SECTIONS.
2. BASE PLATE SHALL BE WELDED TO STEEL PIPE.
3. RACK DIMENSIONS MAY VARY BY MANUFACTURER.

MOUNTING (CONCRETE):
1. BASE PLATE SHALL BE MOUNTED TO CONCRETE VIA EXPANSION ANCHOR: 4" X 5/8" WEDGE ANCHOR WITH TAMPER-RESISTANT SECURITY NUT, OR STAINLESS STEEL MUSHROOM HEAD 3/8" X 3" "SPIKE" #5550 AS MANUFACTURED BY RAWL, OR APPROVED EQUAL
2. RACK SHALL BE SET FIRM AND ALIGNED WITH A TOLERANCE PLUS OR MINUS 1/4" FROM PLUMB.
3. STEEL SHIMS SHALL BE INSTALLED PRIOR TO ANCHORING IN PLACE WHEN NEEDED.

MOUNTING (BRICK PAVERS):
1. REMOVE APPROPRIATE BRICK PAVERS AND PAVER BEDDING MATERIAL AS NECESSARY FOR INSTALLATION.
2. CONSTRUCT CONCRETE SLAB (MINIMUM 4-INCH THICK) OR CONCRETE FOOTINGS (24-INCH DEEP, 12-INCH WIDE) BELOW THE BRICK PAVER BEDDING MATERIAL. CONCRETE SHALL BE CLASS A OR B.
3. BASE PLATE SHALL BE MOUNTED TO CONCRETE VIA EXPANSION ANCHOR: TAMPER-RESISTANT SECURITY NUT, OR STAINLESS STEEL MUSHROOM HEAD 3/8" X 3" "SPIKE" #5550 AS MANUFACTURED BY RAWL, OR APPROVED EQUAL
4. RACK SHALL BE SET FIRM AND ALIGNED WITH A TOLERANCE PLUS OR MINUS 1/4" FROM PLUMB.
5. STEEL SHIMS SHALL BE INSTALLED PRIOR TO ANCHORING IN PLACE WHEN NEEDED.
6. PAVERS SHALL BE CUT TO FIT RACK POSTS. REPLACE BEDDING MATERIAL IN KIND AND REINSTALL PAVERS.

INVERTED "U" BIKE RACK (STAINLESS STEEL)

Know what's **below.**
Call before you dig.

20 0 10 20
PLAN SCALE: 1" = 20'

NO.	DATE	REVISION DESCRIPTION

CIVIL ENGINEERING CONSULTANT:
Strategic Land Solutions, Inc.
Civil Engineering - Land Planning - Entitlements
2595 PONDEROSA ROAD
FRANKTOWN, CO 80116
720.384.7661 Phone
rpalmer@strategicls.net
Robert J. Palmer, PE
President

PREPARED UNDER THE DIRECT SUPERVISION OF:
SEAL: COLORADO REGISTERED ROBERT J. PALMER 36320 PROFESSIONAL ENGINEER
BY Robert J. Palmer, PE
Licensed Professional Engineer (CO PE #36320),
AS PRESIDENT FOR STRATEGIC LAND SOLUTIONS, INC.

McDonald's®
THESE PLANS AND SPECIFICATIONS ARE THE PROPERTY OF MCDONALD'S CORPORATION AND SHALL NOT BE REPRODUCED WITHOUT THEIR WRITTEN PERMISSION.

OFFICE: ROCKY MOUNTAIN REGION
ADDRESS: 4643 S. ULSTER STREET, SUITE 1300, DENVER, COLORADO 80237

STREET ADDRESS: 10950 S. PARKER ROAD
CITY: PARKER
STATE: COLORADO
COUNTY: DOUGLAS
STATE STORE #: 50162
NATIONAL #: 7462
REGIONAL DWG. NO: -

SCALE: 1"=20'	McD RE: BOWAN
DATE: 10/08/2025	McD P/CM: MANN
DESIGNED BY: RJP	
DRAWN BY: RJP	FILE NAME: CURRENT.DWG
CHECKED BY: RJP	SLS JN: 14-001-47

DRAWING TITLE: SITE PLAN

SHEET NO: C1.0

SITE DEVELOPMENT PLAN
MCDONALDS REMODEL AT PARKER CENTRAL AREA
FILING NO. 5, BLOCK 1, LOT 2

PARKER CENTRAL AREA FILING NO. 5, BLOCK 1, LOT 2, TOWN OF PARKER,
COUNTY OF DOUGLAS, STATE OF COLORADO.
ADDRESS: 10950 S. PARKER ROAD

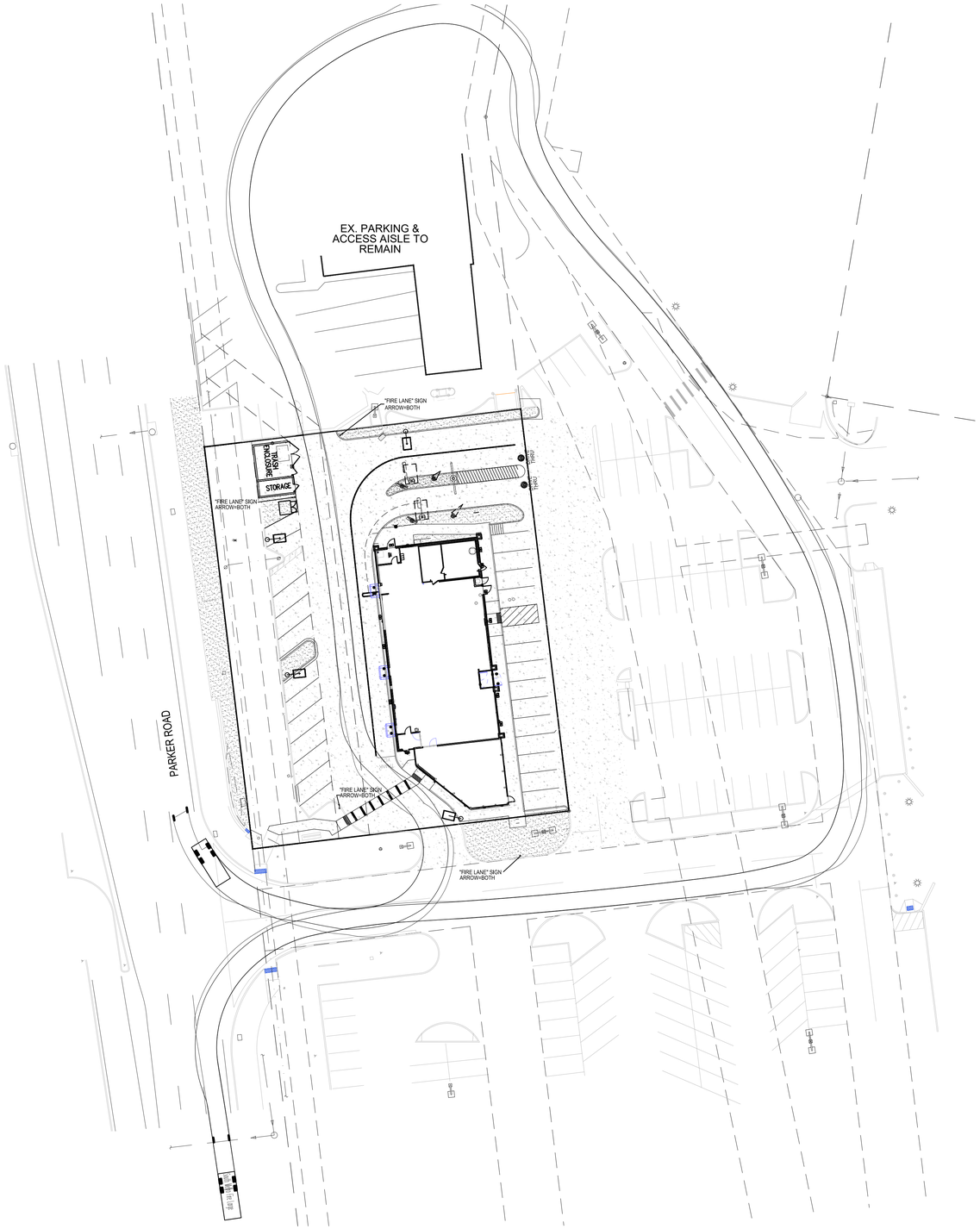

FIRE ACCESS ROAD DESIGN CRITERIA

VEHICLE SPECIFICATIONS are provided for the largest apparatus in use by South Metro Fire Rescue. Fire Apparatus Access Roads shall be capable of accommodating this apparatus.

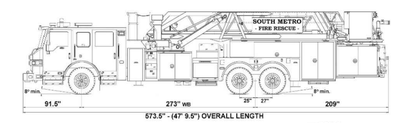

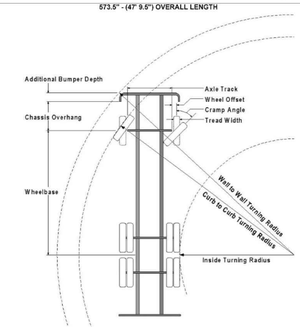

30 0 15 30
PLAN SCALE: 1" = 30'

Know what's **below.**
Call before you dig.

NO.	DATE	REVISION DESCRIPTION

CIVIL ENGINEERING CONSULTANT:

Strategic Land Solutions, Inc.
Civil Engineering • Land Planning • Entitlements
2595 PONDEROSA ROAD
FRANKTOWN, CO 80116
720.384.7661 Phone
rpalmer@strategicls.net
Robert J. Palmer, PE
President

PREPARED UNDER THE DIRECT SUPERVISION OF:

SEAL: COLORADO REGISTERED ROBERT J. PALMER 36320 PROFESSIONAL ENGINEER

BY Robert J. Palmer, PE
Licensed Professional Engineer (CO PE #36320),
AS PRESIDENT FOR STRATEGIC LAND SOLUTIONS, INC.

McDonald's®

THESE PLANS AND SPECIFICATIONS ARE THE PROPERTY OF McDONALD'S CORPORATION AND SHALL NOT BE REPRODUCED WITHOUT THEIR WRITTEN PERMISSION.

OFFICE: ROCKY MOUNTAIN REGION
ADDRESS: 4643 S. ULSTER STREET, SUITE 1300, DENVER, COLORADO 80237

STREET ADDRESS: 10950 S. PARKER ROAD
CITY: PARKER
STATE: COLORADO
COUNTY: DOUGLAS
STATE STORE #: 50162
NATIONAL #: 7462
REGIONAL DWG. NO: -

SCALE:	1"=20'	McD RE:	BOWAN
DATE:	10/08/2025	McD P/CM:	MANN
DESIGNED BY:	RJP		
DRAWN BY:	RJP	FILE NAME:	CURRENT.DWG
CHECKED BY:	RJP		SLS JN: 14-001-47

DRAWING TITLE:
FIRE ACCESS PLAN

SHEET NO:
C1.1

SITE DEVELOPMENT PLAN
MCDONALDS REMODEL AT PARKER CENTRAL AREA
FILING NO. 5, BLOCK 1, LOT 2

PARKER CENTRAL AREA FILING NO. 5, BLOCK 1, LOT 2, TOWN OF PARKER,
COUNTY OF DOUGLAS, STATE OF COLORADO.
ADDRESS: 10950 S. PARKER ROAD

PLAN SCALE: 1" = 20'

Know what's below. Call before you dig.

NO.	DATE	REVISION DESCRIPTION

CIVIL ENGINEERING CONSULTANT:

Strategic Land Solutions, Inc.
Civil Engineering - Land Planning - Entitlements
2595 PONDEROSA ROAD
FRANKTOWN, CO 80116
720.384.7661 Phone
rpalmer@strategicls.net
Robert J. Palmer, PE
President

PREPARED UNDER THE DIRECT SUPERVISION OF:

SEAL: COLORADO REGISTERED ROBERT J. PALMER 36320 PROFESSIONAL ENGINEER

BY Robert J. Palmer, PE
Licensed Professional Engineer (CO PE #36320),
AS PRESIDENT FOR STRATEGIC LAND SOLUTIONS, INC.

McDonald's®

THESE PLANS AND SPECIFICATIONS ARE THE PROPERTY OF McDONALD'S CORPORATION AND SHALL NOT BE REPRODUCED WITHOUT THEIR WRITTEN PERMISSION.

OFFICE: ROCKY MOUNTAIN REGION
ADDRESS: 4643 S. ULSTER STREET, SUITE 1300, DENVER, COLORADO 80237

STREET ADDRESS: 10950 S. PARKER ROAD
CITY: PARKER
STATE: COLORADO
COUNTY: DOUGLAS
STATE STORE #: 50162
NATIONAL #: 7462
REGIONAL DWG. NO: -

SCALE:	1"=20'	McD RE:	BOWAN
DATE:	10/08/2025	McD P/CM:	MANN
DESIGNED BY:	RJP		
DRAWN BY:	RJP	FILE NAME:	CURRENT.DWG
CHECKED BY:	RJP		SLS Jb: 14-001-47

DRAWING TITLE: GRADING PLAN

SHEET NO: C2.0

SITE DEVELOPMENT PLAN
MCDONALDS REMODEL AT PARKER CENTRAL AREA
FILING NO. 5, BLOCK 1, LOT 2

PARKER CENTRAL AREA FILING NO. 5, BLOCK 1, LOT 2, TOWN OF PARKER,
COUNTY OF DOUGLAS, STATE OF COLORADO.
ADDRESS: 10950 S. PARKER ROAD

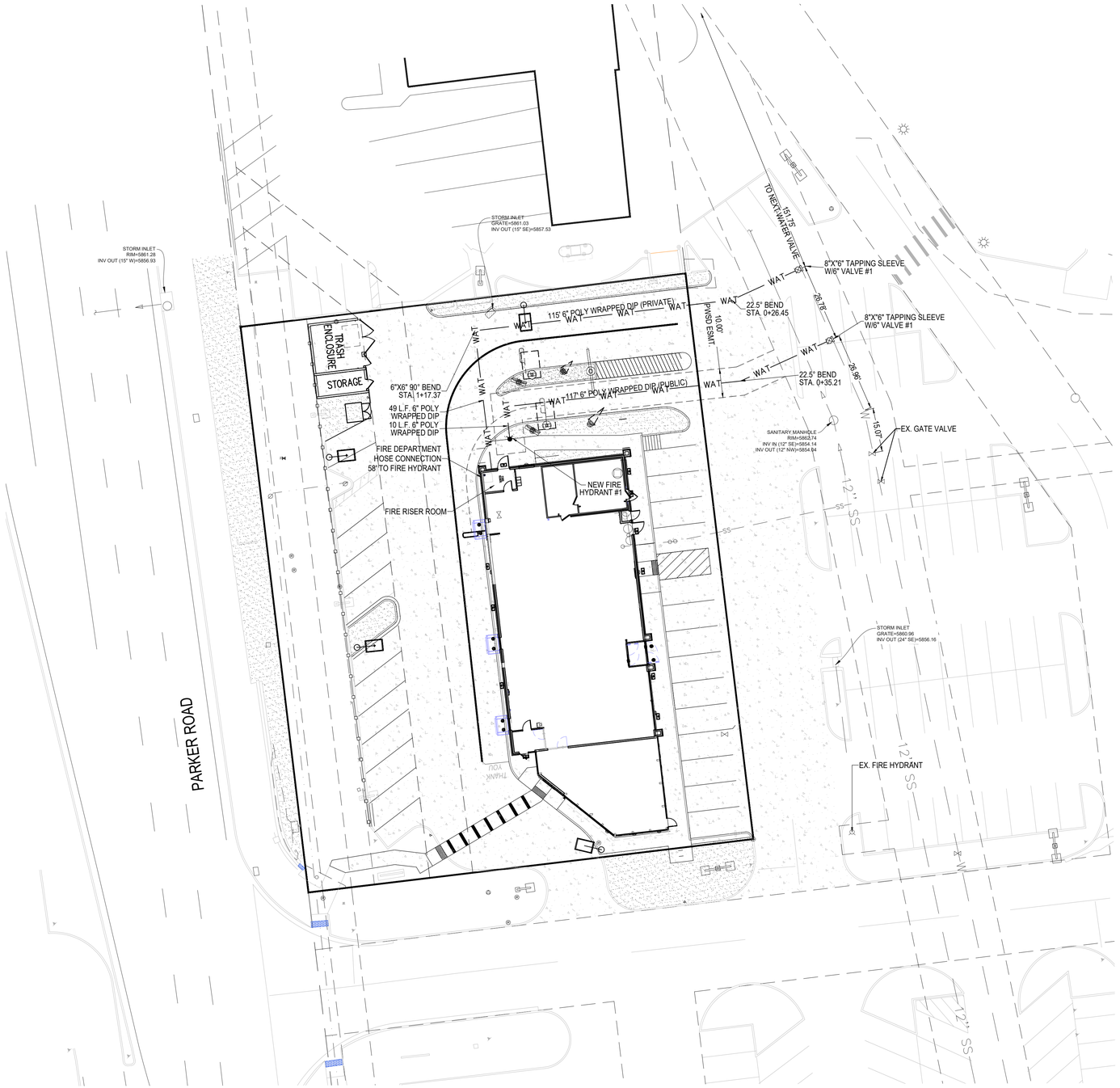

WATER AND SEWER FOR INFORMATION ONLY. ALL WATER AND SEWER IMPROVEMENTS SHALL BE PER THE PARKER WATER AND SANITATION DISTRICT APPROVED PLANS.

20 0 10 20
PLAN SCALE: 1" = 20'

Know what's **below.**
Call before you dig.

NO.	DATE	REVISION DESCRIPTION

CIVIL ENGINEERING CONSULTANT:

Strategic Land Solutions, Inc.
Civil Engineering - Land Planning - Entitlements
2595 PONDEROSA ROAD
FRANKTOWN, CO 80116
720.384.7661 Phone
rpalmer@strategicls.net
Robert J. Palmer, PE
President

PREPARED UNDER THE DIRECT SUPERVISION OF:

SEAL: COLORADO REGISTERED ROBERT J. PALMER 36320 PROFESSIONAL ENGINEER

BY Robert J. Palmer, PE
Licensed Professional Engineer (CO PE #36320),
AS PRESIDENT FOR STRATEGIC LAND SOLUTIONS, INC.

McDonald's®

THESE PLANS AND SPECIFICATIONS ARE THE PROPERTY OF McDONALD'S CORPORATION AND SHALL NOT BE REPRODUCED WITHOUT THEIR WRITTEN PERMISSION.

OFFICE: ROCKY MOUNTAIN REGION
ADDRESS: 4643 S. ULSTER STREET, SUITE 1300, DENVER, COLORADO 80237

STREET ADDRESS: 10950 S. PARKER ROAD
CITY: PARKER
STATE: COLORADO
COUNTY: DOUGLAS
STATE STORE #: 50162
NATIONAL #: 7462
REGIONAL DWG. NO: -

SCALE:	1"=20'	McD RE:	BOWAN
DATE:	10/08/2025	McD P/CM:	MANN
DESIGNED BY:	RJP		
DRAWN BY:	RJP	FILE NAME:	CURRENT.DWG
CHECKED BY:	RJP		SLS JN: 14-001-47

DRAWING TITLE:
UTILITY PLAN

SHEET NO:
C3.0

SITE DEVELOPMENT PLAN
MCDONALDS REMODEL AT PARKER CENTRAL AREA
FILING NO. 5, BLOCK 1, LOT 2

PARKER CENTRAL AREA FILING NO. 5, BLOCK 1, LOT 2, TOWN OF PARKER,
COUNTY OF DOUGLAS, STATE OF COLORADO.
ADDRESS: 10950 S. PARKER ROAD

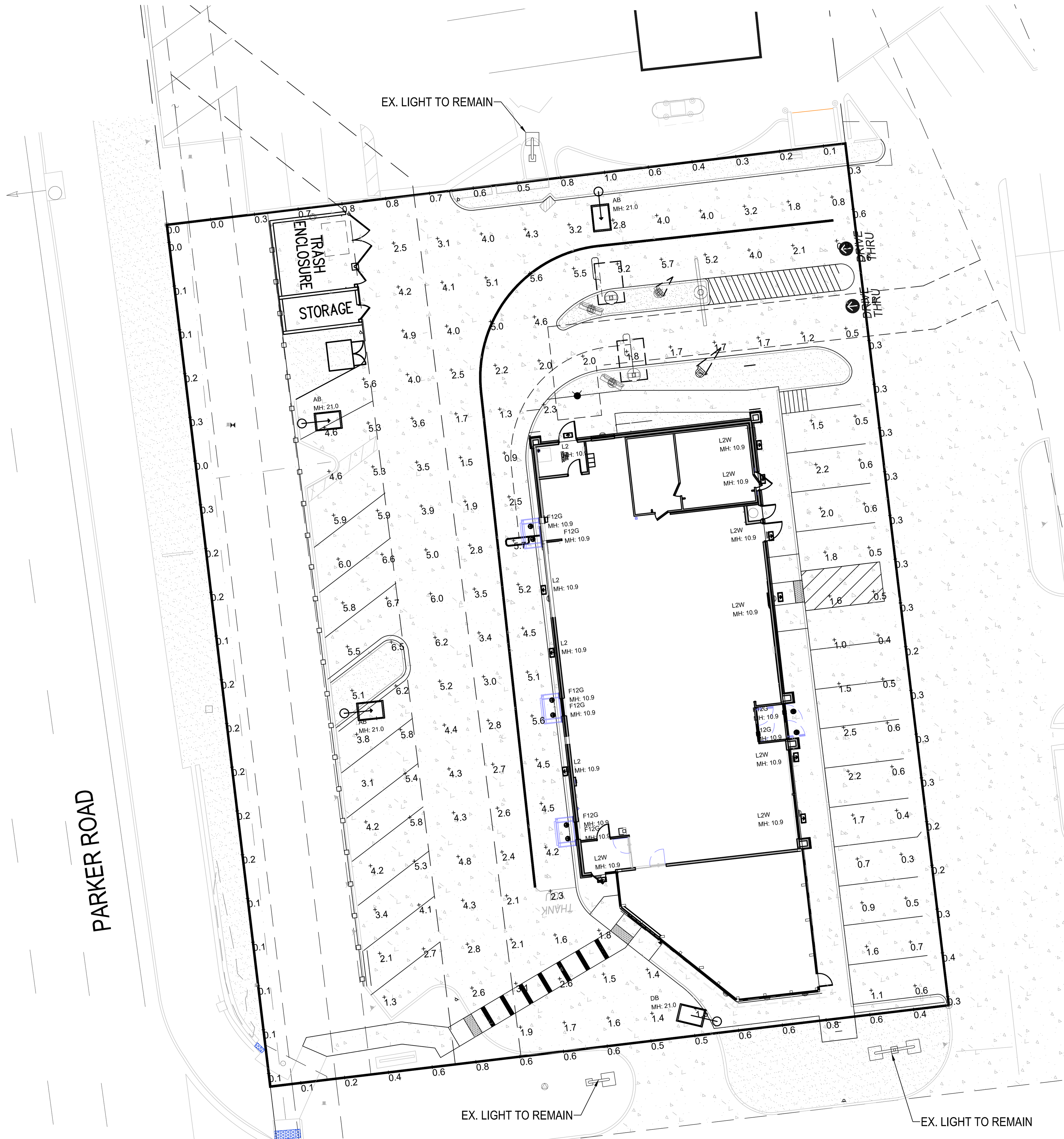

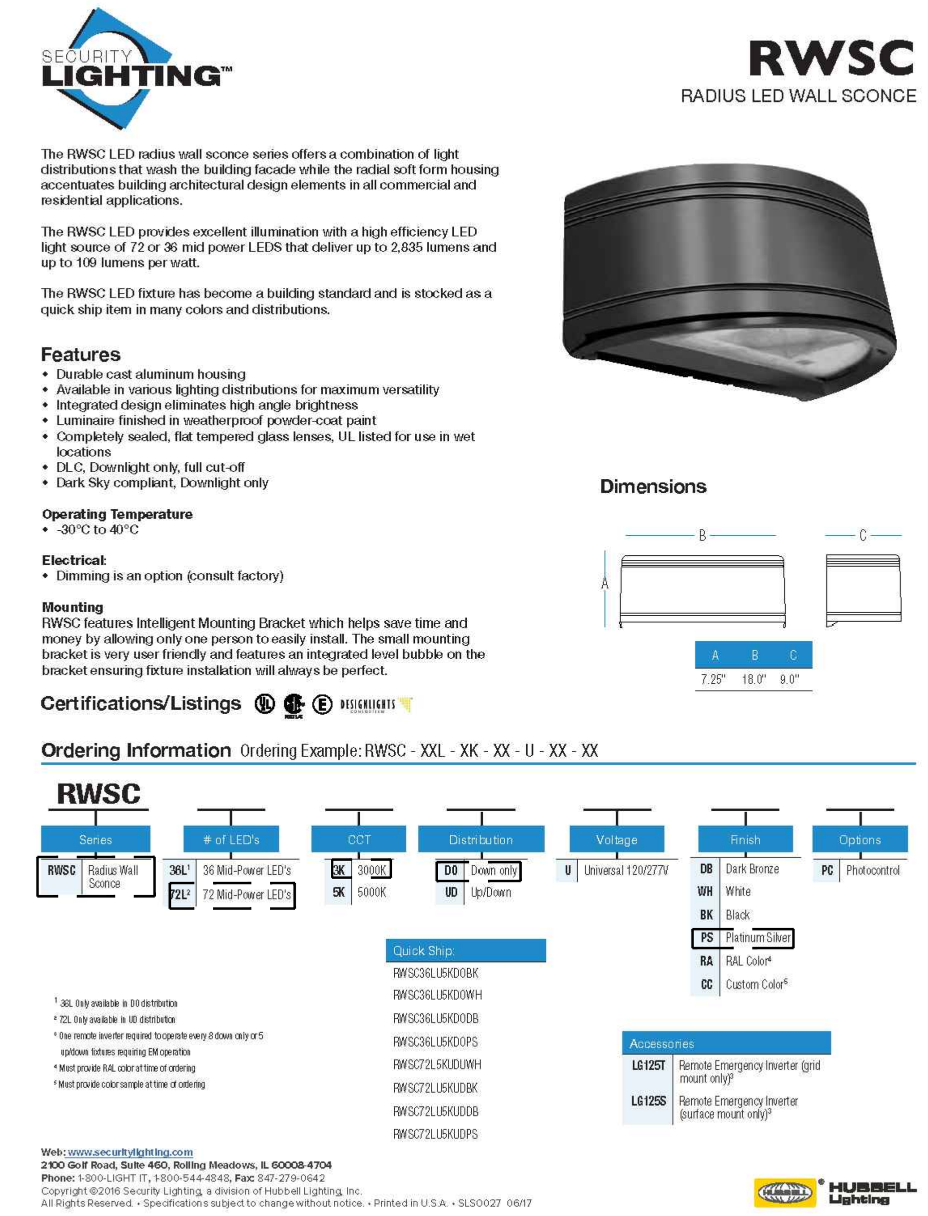

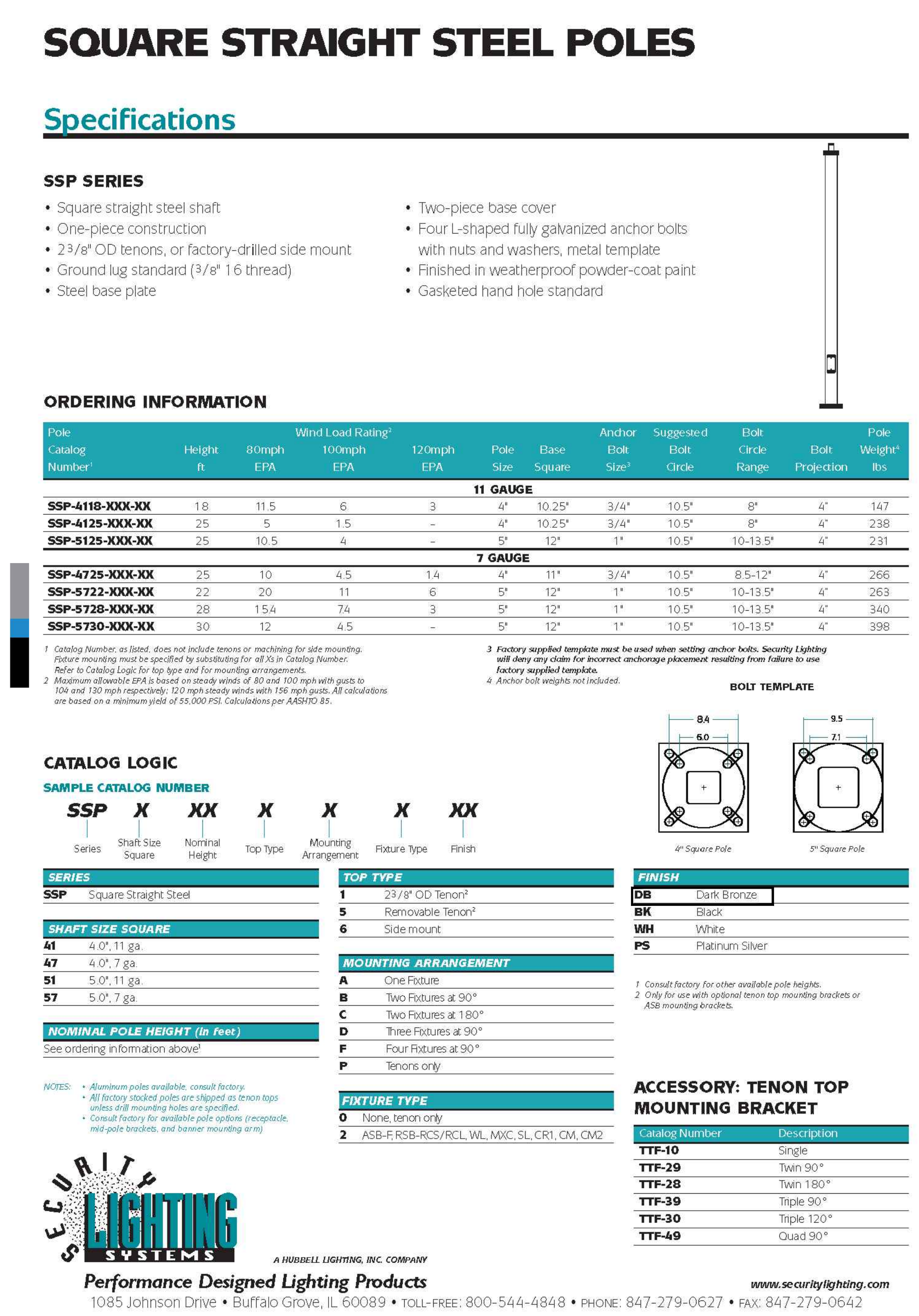

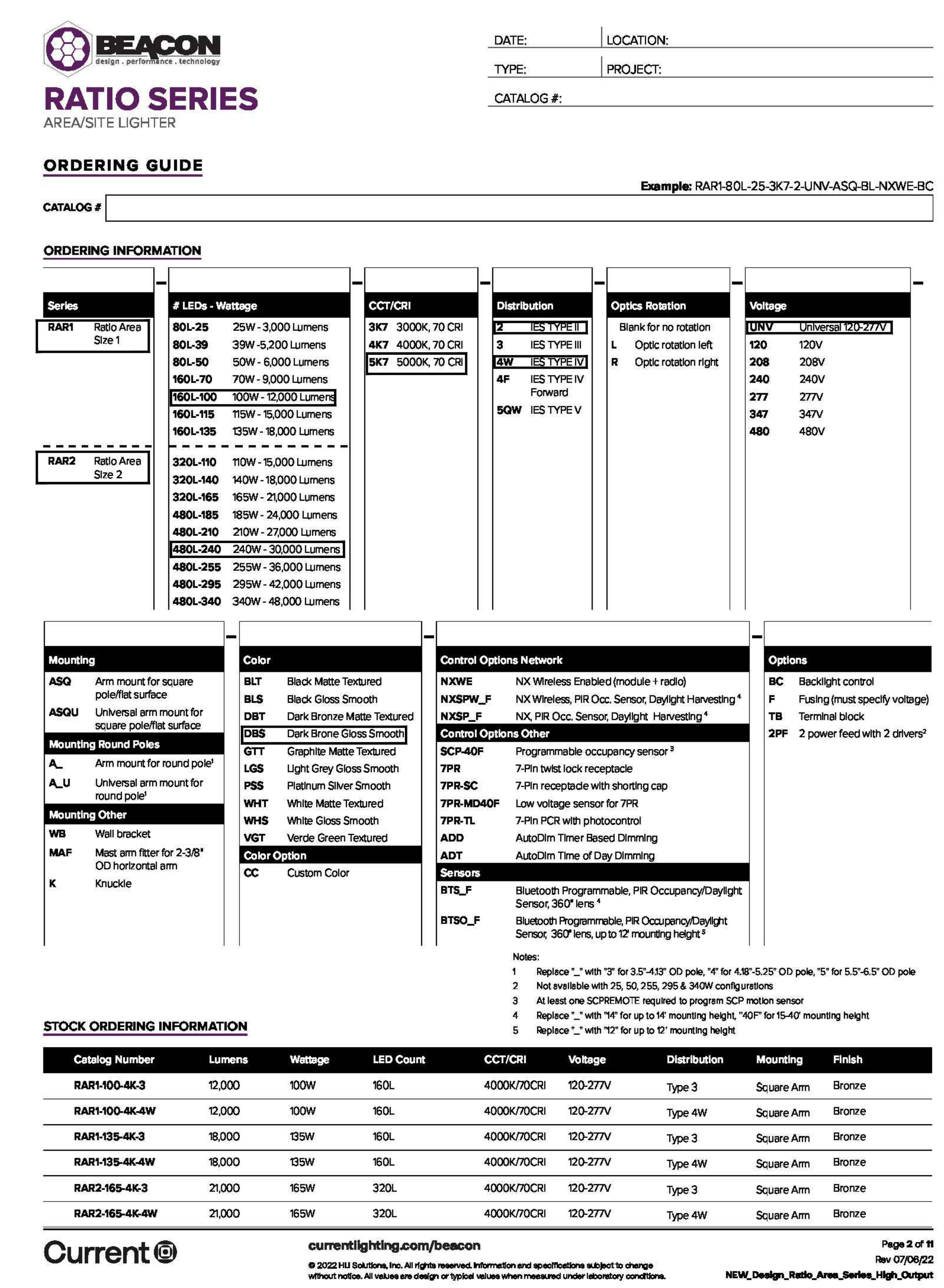

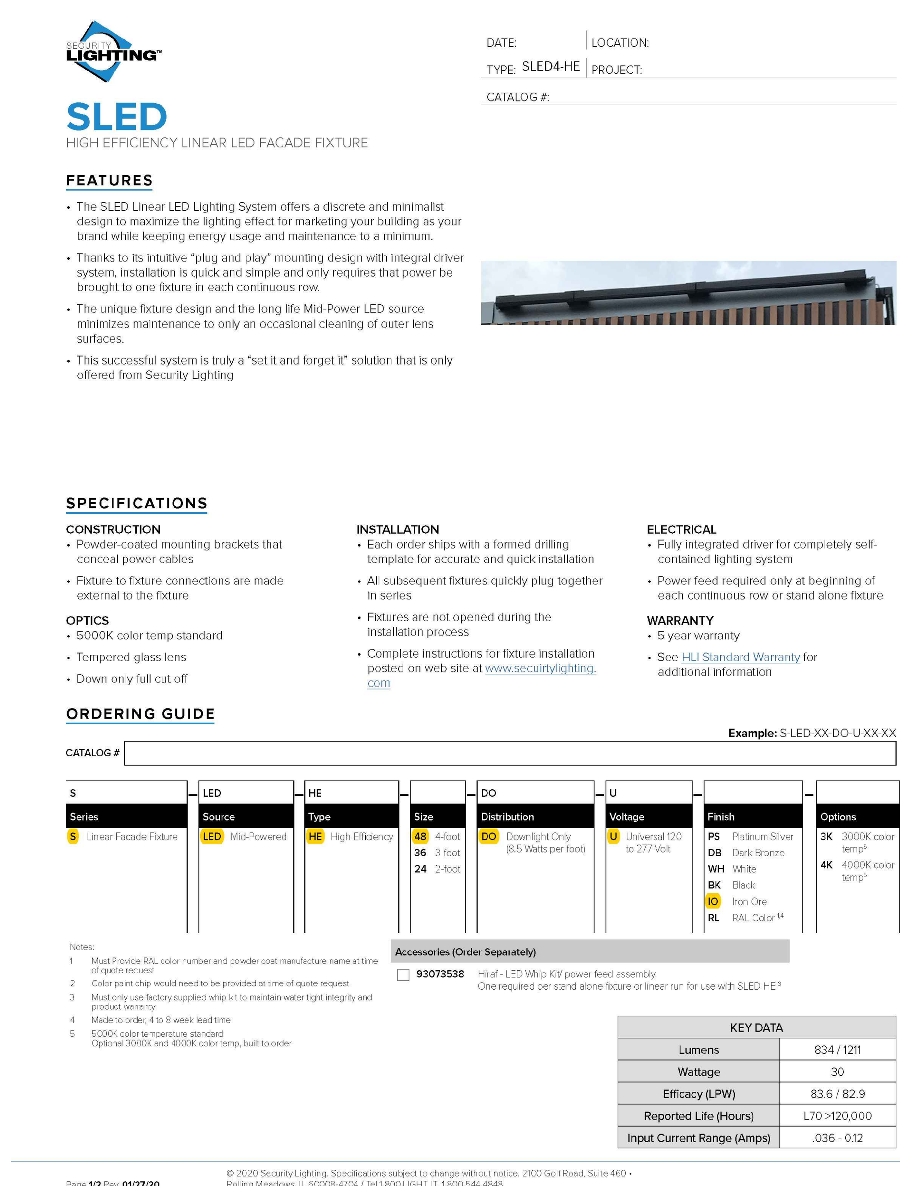

Update table. Per LDO Administrative Manual Section B.2.(f). Photometric Plan needs to include a table with the following information: light fixture,name, label, height, fixture color, total lumens, lighting type - CCT. CCT shall be below 5001 Kelvin.

Calculation Summary

Label	CalcType	Units	Avg	Max	Min	Avg/Min	Max/Min
PAVED SURFACE READINGS	Illuminance	Fc	3.12	6.7	0.3	10.40	22.33
Propertyline	Illuminance	Fc	0.35	1.0	0.0	N.A.	N.A.

Luminaire Schedule

Symbol	Qty	Label	Arrangement	LLF	Description	Lum. Watts	EPA	Mtg Height	Pole Type
	1	DB	Single	0.850	RAR-1-160L-100-5K7-2-BC	90	0.607	21	SES-18-40-1-TA-GL-xx (4")
	3	AB	Single	0.850	RAR-2-480L-240-5K7-4W-BC	226.9	0.607	21	SES-18-40-1-TA-GL-xx (4")
	8	F12G	Single	0.850	8542-5CCT-5000K	12.45			
	4	L2	SINGLE	0.850	RWSC-36L-5K-DO-U-PS	14.4			
	7	L2W	SINGLE	0.850	RWSC-36L-5K-DO-U-WH	14.4			

PLAN SCALE: 1" = 20'

Know what's below. Call before you dig.

NO. | DATE | REVISION DESCRIPTION

CIVIL ENGINEERING CONSULTANT:

Strategic Land Solutions, Inc.
2595 PONDEROSA ROAD
FRANKTOWN, CO 80116
720.384.7661 Phone
rpalmer@strategicls.net
Robert J. Palmer, PE
President

PREPARED UNDER THE DIRECT SUPERVISION OF:
SEAL: COLORADO REGISTERED ROBERT J. PALMER 36320 PROFESSIONAL ENGINEER
BY Robert J. Palmer, PE
Licensed Professional Engineer (CO PE #36320),
AS PRESIDENT FOR STRATEGIC LAND SOLUTIONS, INC.

McDonald's
THESE PLANS AND SPECIFICATIONS ARE THE PROPERTY OF McDONALD'S CORPORATION AND SHALL NOT BE REPRODUCED WITHOUT THEIR WRITTEN PERMISSION.
OFFICE: ROCKY MOUNTAIN REGION
ADDRESS: 4643 S. ULSTER STREET, SUITE 1300, DENVER, COLORADO 80237

STREET ADDRESS: 10950 S. PARKER ROAD
CITY: PARKER
STATE: COLORADO
COUNTY: DOUGLAS
STATE STORE #: 50162
NATIONAL #: 7462
REGIONAL DWG. NO

SCALE: 1"=20'	McD RE: BOWAN		
DATE: 10/08/2025	McD P/CM: MANN		
DESIGNED BY: RJP			
DRAWN BY: RJP	FILE NAME: CURRENT.DWG		
CHECKED BY: RJP	SLS JN: 14-001-47		

DRAWING TITLE:
PHOTOMETRIC PLAN

SHEET NO:
LI1.0

LANDSCAPE PLAN

SCALE: 1" = 20'

0 20 40 60

N

EXTEND IRRIGATION FROM EXISTING SYSTEM TO NEW PLANTINGS. VERIFY FUNCTIONALITY OF SYSTEM AND REPAIR/REPLACE ANY DAMAGED OR MALFUNCTIONING COMPONENTS. TREES TO RECEIVE TWO 2.0 GPM EMITTERS; SHRUBS TO RECEIVE TWO 1.0 GPH EMITTERS, PERENNIALS AND GRASSES TO RECEIVE ONE 1.0 GPH EMITTER.

PLANT SCHEDULE

SYMBOL	CODE	QTY	BOTANICAL / COMMON NAME	CONT
TREES				
	AG	1	ACER GRANDIDENTATUM / BIGTOOTH MAPLE	2" B&B
	MS	1	MALUS X `SPRING SNOW` / SPRING SNOW CRAB APPLE	1.5" B&B MULTISTEM
	EXR	1	RELOCATE AS INDICATED / EXISTING TREE TO BE RELOCATED	EX
	EX-REM	1	REMOVE AS INDICATED / EXISTING TREE TO BE REMOVED	EXISTING
	EX-RET	9	TO REMAIN- PROTECT DURING CONSTRUCTION / EXISTING TREE TO REMAIN	EXISTING
SYMBOL	**CODE**	**QTY**	**BOTANICAL / COMMON NAME**	**SIZE**
SHRUBS				
	AC	19	ARCTOSTAPHYLOS X COLORADOENSIS `CHIEFTAIN` / MANZANITA	5 GAL
	CMF	6	CHAMAEBATIARIA MILLEFOLIUM `FERNBUSH` / FERNBUSH	5 GAL
	JC	5	JUNIPERUS CHINENSIS 'PFITZERIANA COMPACTA' / COMPACTA PFITZER JUNIPER	5 GAL
	JHH	5	JUNIPERUS HORIZONTALIS 'HUGHES' / CREEPING JUNIPER	5 GAL
	JMG	4	JUNIPERUS SCOPULORUM `MOONGLOW' / UPRIGHT JUNIPER	10 GAL
	POL	14	PHYSOCARPUS OPULIFOLIUS `LITTLE DEVIL` / DWARF PURPLE NINEBARK	5 GAL
	POF	9	POTENTILLA FRUTICOSA `ABBOTSWOOD' / POTENTILLA	5 GAL
	ESTR	28	TO REMAIN / EXISTING SHRUB	EX
GRASSES				
	BB	10	BOUTELOUA GRACILIS `BLONDE AMBITION` / BLUE GRAMA	1 GAL
	CAC	45	CALAMAGROSTIS X ACUTIFLORA / FEATHER REED GRASS	1 GAL
	SW	12	SPOROBOLUS WRIGHTII / BIG SACATON	1 GAL
PERENNIALS				
	AQ	6	AQUILEGIA CHRYSANTHA / GOLDEN COLUMBINE	1 GAL
SYMBOL	**CODE**	**QTY**	**BOTANICAL / COMMON NAME**	**CONT**
GROUND COVERS				
	EX-RS	3,739 SF	EX LANDSCAPE - SHRUB BED / TO REMAIN	EXISTING
	EX-RES	5,509 SF	EX TURF TO REMAIN / EXISTING IRRIGATED TURF	EXISTING
MULCHES				
	RM	4,248 SF	ROCK MULCH / RIVER ROCK 1"-2"	MULCH

ANY EXISTING TREES TO REMAIN THAT EXPERIENCE MORTALITY DUE TO CONSTRUCTION SHALL BE REPLACED WITH SIMILAR SIZE AND SPECIES

NOTE:
ANY PLANTS THAT ARE NOT MAINTAINED SHALL BE REPLACED

REFERENCE NOTES SCHEDULE

CODE	DESCRIPTION	QTY
1	PLACE SHREDDED CEDAR MULCH AROUND BASE OF ALL PERENNIALS AND GRASSES IN LARGE COBBLE AREAS. MASSED PERENNIALS TO RECEIVE LARGE RING AROUND ENTIRE GROUP (TYP).	
2	PLACE PLANTS TO PROVIDE MIN. 2' CLEARANCE FROM BACK OF CURB AT MATURE SPREAD.	

32 LANDSCAPE IMPROVEMENTS

32-01	14 G ROLL TOP STEEL EDGING, STAKED 30" OC MAX.	365 LF

SITE CATEGORY REQUIREMENTS

OVERALL LANDSCAPE — **Site Area = 30,535 SF**, **4,580 Sf Required**

Total Landscape Area Required (15%)	Total Landscape Area Provided - On-Site	Trees Req / Provided (1/500 sf req)	Shrubs Req / Provided (5/500 sf req)	Evergreen Lsp (Min 25, max 50%)	Plant Coverage Req / Prov
4,580 sf	8996 (29%)	18 / 18 8 + 10 existing	91 62 + 28 existing	37% 33 eg / 31 total = .45	75% / 79% 6747 / 7125

PARKING LOT PERIMETER

Parking Spaces Provided / Area	Parking Island Tree Provided	Parking Island Shrub Required / Provided	Parking Island Area Req / Prov
28	1 / 1	20 / 20	340 / 361

PARKING LOT INTERIOR

Parking Spaces Provided / Area	Parking Lot Perimeter Width Provided	Parking Lot Perimeter Screening Provided	Parking Lot Perimeter Shrubs + Grasses
26	10'	Mixed Shrub Bed	Mixed Shrub Bed

RIGHT OF WAY LANDSCAPING

Frontage	Length (LF)	Trees Req / Prov	Enhanced Landscaping	Enhanced Landscaping Trees + Shrubs
S Parker Rd	210	7 / 0*	1800 sf	Trees = 0 (OHE Conflict) 23 Shrubs + 10 Grasses

*OVERHEAD ELECTRIC SEPARATION REQUIREMENTS PRECLUDE STREET TREE PLANTING

SITE PERIMETER LANDSCAPE

Frontage	Length (LF)	Shrubs Req / Prov	Trees Req / Prov	Evergreen Trees (Min 25%)
S Parker Rd	210	28 / 28	6 / 6 (4 existing)	2 - existing (33%)

Per LDO Administrative Manual, use this section to show "enhanced landscaping" as noted on site plan.

ALL TREES SHALL BE PLACED A MINIMUM 10 FEET AWAY FROM WATER, SANITARY AND STORM SEWERS AND ALL SHRUBS SHALL BE PLACED A MINIMUM OF 5 FEET AWAY FROM WATER, SANITARY, AND STORM SEWERS. NO MATERIAL WITHIN 3' OF A FIRE HYDRANT

NDS
NATURAL DESIGN SOLUTIONS
Landscape Architecture
Land Planning · Irrigation Design
5539 Colt Drive, Longmont, CO 80503
(303) 443-0388 · neil@ndscolorado.com

NO.	DATE	REVISION DESCRIPTION

CIVIL ENGINEERING CONSULTANT:
Strategic Land Solutions, Inc.
Civil Engineering • Land Planning • Entitlements
2595 PONDEROSA ROAD
FRANKTOWN, CO 80116
720.384.7661 Phone
rpalmer@strategicls.net
Robert J. Palmer, PE
President

McDonald's®

THESE PLANS AND SPECIFICATIONS ARE THE PROPERTY OF MCDONALD'S CORPORATION AND SHALL NOT BE REPRODUCED WITHOUT THEIR WRITTEN PERMISSION.

OFFICE: ROCKY MOUNTAIN REGION
ADDRESS: 4643 S. ULSTER STREET, SUITE 1300, DENVER, COLORADO 80237

STREET ADDRESS: 10950 S. PARKER ROAD
CITY: PARKER
STATE: COLORADO
COUNTY: DOUGLAS
STATE STORE #: 50162
NATIONAL #: 7462
REGIONAL DWG. NO: -

SCALE: 1"=20'	McD RE: BOWAN
DATE: 03/13/2025	McD P/CM: MANN
DESIGNED BY: JRO	
DRAWN BY: JRO	FILE NAME: CURRENT.DWG
CHECKED BY: NAM	SLS JN: 14-001-47

DRAWING TITLE: LANDSCAPE PLAN

SHEET NO: LS1.0

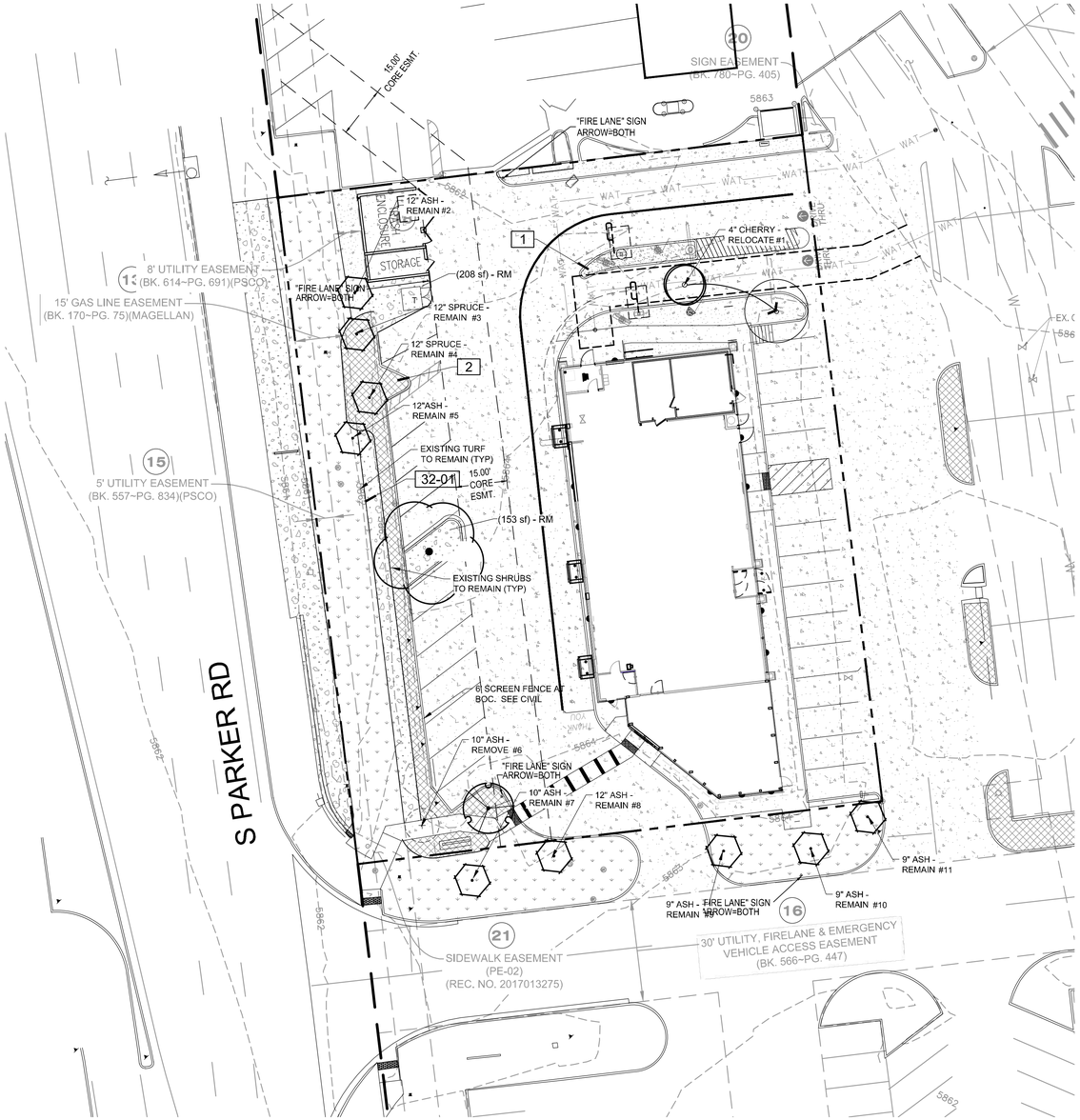

TREE CONSERVATION PLAN

SCALE: 1" = 20'

0 20 40 60

N

PLANT LEGEND

SYMBOL	QTY	BOTANICAL / COMMON NAME
TREES		
	1	RELOCATE AS INDICATED / EXISTING TREE TO BE RELOCATED
	1	REMOVE AS INDICATED / EXISTING TREE TO BE REMOVED
	9	TO REMAIN- PROTECT DURING CONSTRUCTION / EXISTING TREE TO REMAIN

TREE MITIGATION CHART

TREE #	SPECIES	DIAMETER INCHES	MITIGATION VALUE	COMMENTS	MITIGATION INCHES
1	Prunus	4	n/a	Relocate	-
2	Fraxinus	12	n/a	Preserve	-
3	Picea	12	n/a	Preserve	-
4	Picea	12	n/a	Preserve	-
5	Fraxinus	12	n/a	Preserve	-
6	Fraxinus	10	n/a	Remove	-
7	Fraxinus	10	n/a	Preserve	-
8	Fraxinus	12	n/a	Preserve	-
9	Fraxinus	9	n/a	Preserve	-
10	Fraxinus	9	n/a	Preserve	-
11	Fraxinus	9	n/a	Preserve	-
Total		**111**	**$ -**		**0**

MITIGATION CHART ONLY SHOWS ON-SITE TREES IMPACTED BY DEVELOPMENT PROPOSAL

NO.	DATE	REVISION DESCRIPTION

CIVIL ENGINEERING CONSULTANT:

Strategic Land Solutions, Inc.
Civil Engineering • Land Planning • Entitlements
2595 PONDEROSA ROAD
FRANKTOWN, CO 80116
720.384.7661 Phone
rpalmer@strategicls.net
Robert J. Palmer, PE
President

McDonald's®

THESE PLANS AND SPECIFICATIONS ARE THE PROPERTY OF McDONALD'S CORPORATION AND SHALL NOT BE REPRODUCED WITHOUT THEIR WRITTEN PERMISSION.

OFFICE: ROCKY MOUNTAIN REGION
ADDRESS: 4643 S. ULSTER STREET, SUITE 1300, DENVER, COLORADO 80237

STREET ADDRESS: 10950 S. PARKER ROAD
CITY: PARKER
STATE: COLORADO
COUNTY: DOUGLAS
STATE STORE #: 50162
NATIONAL #: 7462
REGIONAL DWG. NO: -

SCALE: 1"=20'	McD RE: BOWAN
DATE: 03/13/2025	McD P/CM: MANN
DESIGNED BY: JRO	
DRAWN BY: JRO	FILE NAME: CURRENT.DWG
CHECKED BY: NAM	SLS Job: 14-001-67

DRAWING TITLE: TREE CONSERVATION PLAN

SHEET NO: LS1.1

NDS
NATURAL DESIGN SOLUTIONS
Landscape Architecture
Land Planning · Irrigation Design
5539 Colt Drive, Longmont, CO 80503
(303) 443-0388 · neil@ndscolorado.com

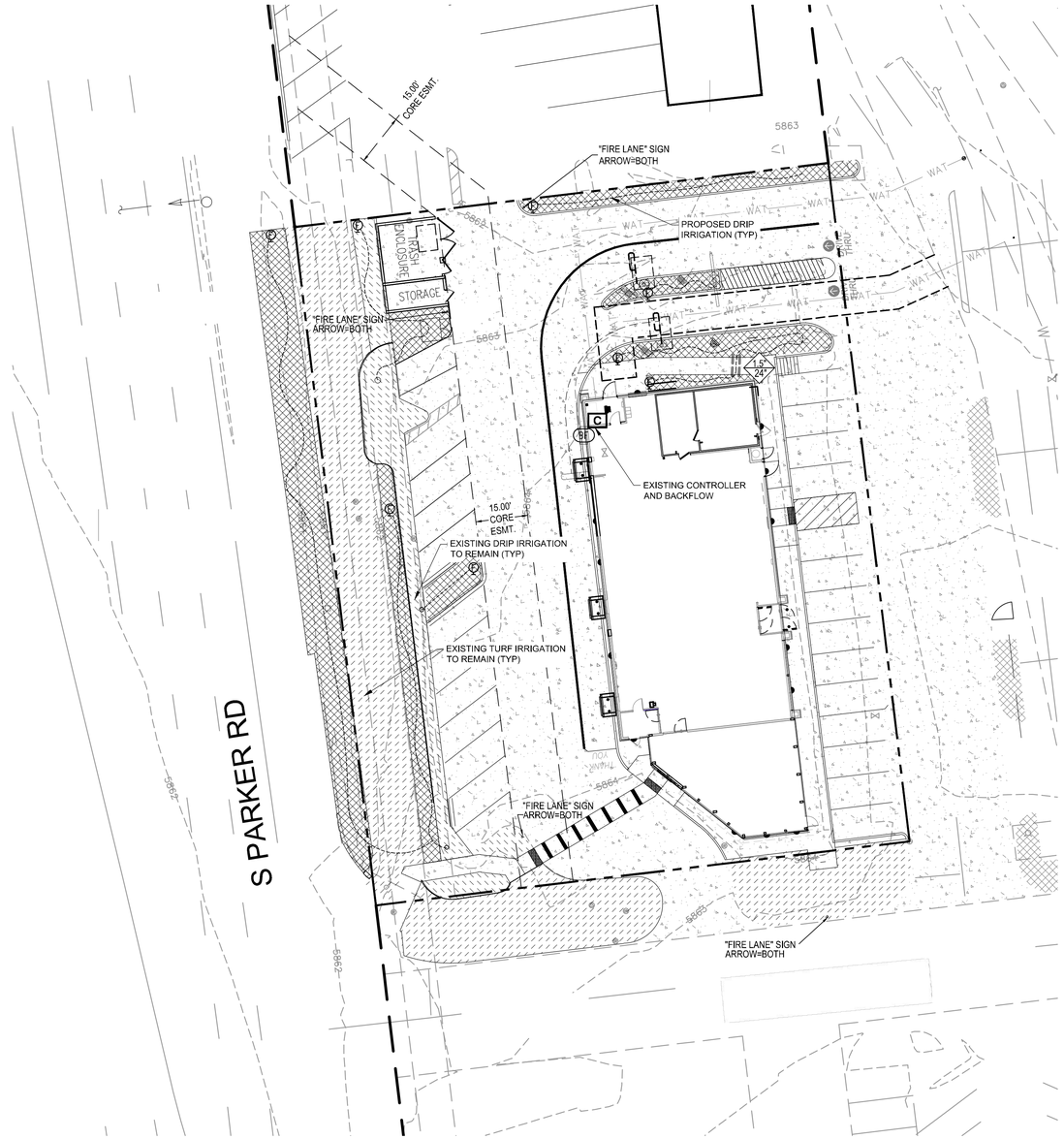

IRRIGATION PLAN

SCALE: 1" = 20'

0 20 40 60

N

IRRIGATION SCHEDULE

SYMBOL	DESCRIPTION
	EXISTING DRIP AREAS EXISTING DRIP IRRIGATION TO REMAIN.
	EXISTING TURF SPRAY TO REMAIN - PROTECT IN PLACE. REPAIR OR REPLACE ANY DAMAGED OR MALFUNCTIONING COMPONENTS AND VERIFY PROPER COVERAGE.
	PROPOSED DRIP AREAS EXTEND IRRIGATION FROM EXISTING DRIP ZONES. MODIFIY LAYOUT AS NECESSITATED. VERIFY PROPER FUNCTIONALITY AND REPLACE ANY DAMAGED OR MALFUNCTIONING COMPONENTS.

SYMBOL	MANUFACTURER/MODEL/DESCRIPTION	QTY
F	FLUSH VALVE 3/4\" PVC BALL VALVE IN 10\" VALVE BOX.	8

SYMBOL	MANUFACTURER/MODEL/DESCRIPTION	QTY
BF	FEBCO 825YA 3/4\" REDUCED PRESSURE BACKFLOW PREVENTER	1
C	RAIN BIRD ESP4-SMTEI WITH (1) ESP-SM3 7 STATION INDOOR SMART MODULAR CONTROL SYSTEM FOR RESIDENTIAL AND LIGHT COMMERCIAL USE. WALL MOUNT, TIPPING BUCKET RAIN SENSOR THAT MEASURES RAINFALL.	1
	PIPE SLEEVE: PVC SCHEDULE 40 PIPE SLEEVE SIZE SHALL ALLOW FOR IRRIGATION PIPING AND THEIR RELATED COUPLINGS TO EASILY SLIDE THROUGH SLEEVING MATERIAL. SLEEVES TO BE MINIMUM 2X PIPE DIAMETER UNLESS OTHERWISE NOTED.EXTEND SLEEVES 18 INCHES BEYOND EDGES OF PAVING OR CONSTRUCTION.	6.0 LF

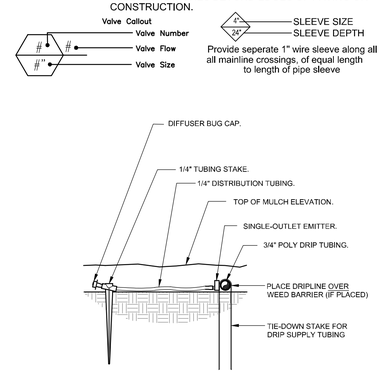

1 DRIP EMITTER DETAIL

3" = 1'-0" 32 8413.13-03

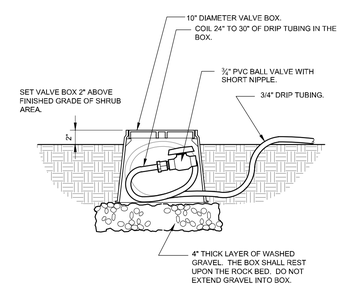

2 DRIP FLUSH VALVE

1 1/2" = 1'-0" 32 8413.49-03

NATURAL DESIGN SOLUTIONS
Landscape Architecture
Land Planning · Irrigation Design
5539 Colt Drive, Longmont, CO 80503
(303) 443-0388 · neil@ndscolorado.com

NO.	DATE	REVISION DESCRIPTION

CIVIL ENGINEERING CONSULTANT:

Strategic Land Solutions, Inc.
Civil Engineering • Land Planning • Entitlements
2595 PONDEROSA ROAD
FRANKTOWN, CO 80116
720.384.7661 Phone
rpalmer@strategicls.net
Robert J. Palmer, PE
President

McDonald's®

THESE PLANS AND SPECIFICATIONS ARE THE PROPERTY OF MCDONALD'S CORPORATION AND SHALL NOT BE REPRODUCED WITHOUT THEIR WRITTEN PERMISSION.

OFFICE: ROCKY MOUNTAIN REGION
ADDRESS: 4643 S. ULSTER STREET, SUITE 1300, DENVER, COLORADO 80237

STREET ADDRESS: 10950 S. PARKER ROAD
CITY: PARKER
STATE: COLORADO
COUNTY: DOUGLAS
STATE STORE #: 50162
NATIONAL #: 7462
REGIONAL DWG. NO: -

SCALE: 1"=20'	McD RE: BOWAN
DATE: 03/13/2025	McD P/CM: MANN
DESIGNED BY: JRO	
DRAWN BY: JRO	FILE NAME: CURRENT.DWG
CHECKED BY: NAM	SLS JN: 14-001-47

DRAWING TITLE: IRRIGATION PLAN

SHEET NO: IRR1.0

GENERAL NOTES

(Note: All references to "Contractor" are specific to "Landscape Contractor" unless notified as "General or other type of Contractor")

1. CONTRACTOR IS RESPONSIBLE FOR VERIFYING QUANTITIES OF MATERIALS NEEDED TO COMPLETE THIS PLAN IN THE FIELD. NOTIFY LANDSCAPE ARCHITECT OF ANY DISCREPANCIES BETWEEN THE DRAWINGS AND CONDITIONS IN THE FIELD. SUBSTITUTIONS OF PLANT MATERIAL ARE NOT ALLOWED WITHOUT APPROVAL FROM LANDSCAPE ARCHITECT GIVEN PRIOR TO INSTALLATION. GRAPHIC QTY'S. PREVAIL OVER WRITTEN QTY'S. PRIOR TO COMMENCEMENT OF WORK THE LANDSCAPE CONTRACTOR SHALL CONTACT OWNERS REPRESENTATIVE FOR SPECIFIC INSTRUCTIONS RELEVANT TO THE SEQUENCING AND SCOPE OF WORK.
2. CONTRACTOR IS RESPONSIBLE FOR INSTALLING ALL LANDSCAPE SHOWN ON THIS PLAN. ANY DEFICIENCIES OR DEVIATIONS FROM THIS PLAN ARE TO BE APPROVED BY OWNER'S REPRESENTATIVE OR LANDSCAPE ARCHITECT. ANY CHANGES FROM THE APPROVED PLANS MAY REQUIRE APPROVAL FROM THE CITY OR COUNTY PLANNING DEPARTMENTS. LANDSCAPE CONTRACTOR TO PROVIDE ALL LABOR AND MATERIALS NECESSARY TO FURNISH SCOPE OF WORK AS SHOWN PER PLAN.
3. EXISTING TOPSOIL IS TO BE STOCKPILED AND USED TO ESTABLISH FINAL GRADES WITHIN LANDSCAPE AREAS. ALL STOCKPILED SOIL MUST BE CLEAR OF WEEDS, ROCKS AND DEBRIS BEFORE REUSE. ALL BERMED PLANTING BEDS TO BE CREATED WITH IMPORTED TOPSOIL.
4. GENERAL CONTRACTOR TO RE-SPREAD STOCKPILED SOIL AND ESTABLISH ROUGH GRADE CONDITIONS TO THE FOLLOWING SPECIFICATIONS:
   A. 1" BELOW CURB FOR ALL SEEDED AREAS.
   B. 2.5" BELOW CURB FOR ALL SODDED AREAS.
   C. 4" BELOW CURB FOR ALL PLANTING, ROCK AND MULCH BEDS.
5. CONTRACTOR TO TILL PARKING LOT ISLANDS TO A DEPTH OF 30".
6. AMEND ALL PLANTING BEDS WITH CLASS 1 COMPOST. APPLY AT RATE OF 3 CYDS. PER 1000 SQUARE FEET TO ALL PLANTING BEDS AND MANICURED LAWN AREAS, AND 2 CYDS. PER 1000 SQUARE FEET FOR SEEDED AREAS. TILL, MIXING THOROUGHLY, INTO THE UPPER 8" OF SOIL.
7. FINE GRADE TO BE ESTABLISHED BY LANDSCAPE CONTRACTOR. FINE GRADE SHALL BE FREE OF ROCKS AND DEBRIS. FINE GRADE IN SEED AREAS SHALL BE FREE FROM ROCKS AND DEBRIS ½" AND GREATER. FINE GRADE IN SODDED AREAS SHALL BE FREE FROM ROCKS AND DEBRIS ¼"AND GREATER. CONTRACTOR TO REPORT ANY POOR DRAINAGE CONDITIONS PRIOR TO CONSTRUCTION.
8. CONTRACTOR IS TO PROVIDE VERIFICATION THAT ALL SOD AND SEED IS OF THE SPECIES SHOWN ON THIS PLAN. NO SUBSTITUTIONS WILL BE ALLOWED. SOD TO BE LAID WITH TIGHT STAGGERED EDGES AND BE ROLLED AFTER INSTALLATION. SEEDED AREAS CANNOT BE SUBSTITUTED WITH SOD.
9. MULCHS: ALL PLANTING BEDS THAT CALL FOR WOOD MULCH TO RECEIVE 4" ORGANIC SHREDDED BARK MULCH. SHREDDED MULCH IS TO BE OF FIBROUS MATERIAL, NOT CHIPS OR CHUNKS. NO FABRIC IS TO BE PLACED UNDER WOOD/ORGANIC MULCH. ALL MULCHED BEDS ARE TO BE SPRAYED WITH WATER AFTER INSTALLATION TO HELP MULCH TO MAT DOWN.

   ALL AREAS THAT CALL FOR COBBLE/ROCK MULCH TO RECEIVE MIN. 3" DEPTH, UNLESS NOTED OTHERWISE.

   TREES IN COBBLE/ROCK MULCH, SOD AND SEEDED AREAS TO RECEIVE 4' DIAMETER OF WOOD MULCH RING, 3" DEEP. SHRUBS AND GROUNDCOVERS IN COBBLE/ROCK MULCH SOD AND SEEDED AREAS TO RECEIVE A WOOD MULCH RING AT 2X DIAMETER OF ROOT BALL, 3" DEPTH. NO FABRIC UNDERLAYMENT IN WOOD MULCH RINGS.
10. SEED MIX INSTALLATION: CONTRACTOR TO DRILL SEED WITH BRILLION TYPE APPLICATOR AND APPLY 'SOIL GUARD' BONDED FIBER MATRIX (BFM), WHERE INDICATED PER PLAN AND SCHEDULES. APPLY SEED IN TWO DIRECTIONS (PERPENDICULAR OF THE OTHER). ADD SOIL GUARD BFM FOR DRILL SEEDING WHERE NOTED PER PLAN AND ON ALL SLOPES 5:1 TO 3:1. FOR AREAS WITH 3:1 SLOPES OR GREATER CONTRACTOR TO USE SOIL GUARD APPLICATION ONLY (IN LIEU OF HYDROMULCH) CONTRACTOR TO SPOT SEED NON-GERMINATING AREAS (3) MONTHS AFTER INITIAL SEED APPLICATION. CONTRACTOR TO RE-SEED ALL BARE AREAS (6"x6") AND GREATER AFTER (6) MONTHS FROM SEED GERMINATION OR AT THE BEGINNING OF THE FOLLOWING GROWING SEASON. PRIOR TO THE 11-MONTH WARRANTY INSPECTION RE-APPLY SOIL GUARD AND SEED MIX TO ALL BARE AREAS (6"x6" OR GREATER) AND TO ALL BARE AREAS (4"x4" OR GREATER) ON ALL SLOPES 3:1 AND GREATER.
11. REMOVED DEAD TWIGS AND BRANCHES FROM ALL NEW AND EXISTING PLANT MATERIAL IN A MANNER THAT DOES NOT CHANGE THE NATURAL HABIT OF THE PLANT MATERIAL. SCARES OF 1" OR MORE SHALL BE PAINTED WITH ORGANIC TREE PAINT. CENTRAL LEADERS SHALL NOT BE REMOVED AT ANY TIME. NEWLY PLANTED TREES WITHOUT CENTRAL LEADERS WILL BE REJECTED.
12. CONTRACTOR TO APPLY FERTILIZER IN SPRING & LATE SEPTEMBER. WATER THOROUGHLY AFTER APPLICATION OF FERTILIZERS.

    ALL SEEDED AND SODDED AREAS TO HAVE RECOMMEND FERTILIZER APPLICATIONS ADDED ONCE IN MID TO LATE JUNE AND ONCE IN LATE SEPTEMBER. WATER THOROUGHLY AFTER APPLICATION OF FERTILIZERS.
13. ALL PLANT MATERIALS AND UTILITIES ARE SHOWN AT AN APPROXIMATE LOCATIONS. THE CONTRACTOR MAY NEED TO ADJUST LOCATIONS OF PLANT MATERIAL TO ADHERE TO SPECIFIC ON-SITE CONDITIONS AND CODE REQUIREMENTS. ALL TREES AND SHRUBS TO BE PLACES AT 2' MINIMUM BACK OF CURB. CONTRACTOR TO CALL FOR UTILITY LOCATES BEFORE PLANTING (TYP.) 1-800-922-1987, OR CALL 811 BEFORE YOU DIG!
14. STEEL EDGING TO BE USED TO SEPARATE ALL TURF AND/OR SEEDED AREAS FROM PLANTING BEDS. USE PERFORATED EDGING SEGMENTS TO OBTAIN POSITIVE DRAINAGE FOR ALL DRAINAGE SWALES OR AREAS OF STANDING WATER.
15. CONTRACTOR TO PROVIDE COBBLE & UNDERLAYMENT FOR BUILDING DRAINS AND SWALES THROUGH LANDSCAPED AREAS.
16. ALL REQUIRED LANDSCAPING TO BE INSTALLED PRIOR TO ISSUANCE OF THE CERTIFICATE OF OCCUPANCY.
17. ALL NURSERY STOCK TO CONFORM TO THE AMERICAN STANDARD FOR NURSERY STOCK (ANSI z60.1) AND THE COLORADO NURSERY ACT.
18. CONTRACTOR IS RESPONSIBLE FOR CONTACTING LANDSCAPE ARCHITECT FOR ALL REQUIRED INSPECTIONS. PROVIDE AT LEAST 48 HOURS NOTICE TO SCHEDULE AN INSPECTION. REQUIRED INSPECTIONS INCLUDE A LANDSCAPE LAYOUT AND PLANT MATERIAL VERIFICATION AND PLACEMENT INSPECTION, IRRIGATION MAIN LINE INSPECTION, LANDSCAPE AND IRRIGATION PUNCH LIST INSPECTION, AND A LANDSCAPE AND IRRIGATION FINAL INSPECTION.
19. CONTRACTOR IS TO PROVIDE A ONE YEAR WARRANTY ON ALL PLANT MATERIAL, TURF, IRRIGATION COMPONENTS, AND WORKMANSHIP. REPLACEMENT PLANT MATERIALS SHALL BE OF THE SAME SPECIES AND SIZE AS THE DECAYED OR DEAD PLANT MATERIAL. WARRANTY IS VOID IF PLANT MATERIAL ARE UNDER OR OVER-WATERED/FERTILIZED, DAMAGED BY VANDALISM OR NEGLECTED BY OWNER AFTER FINAL MAINTENANCE PERIOD AND FINAL ACCEPTANCE IS PROVIDED.

    REMOVE ALL TREE STAKING MATERIALS AT END OF WARRANTY, PRIOR TO FINAL ACCEPTANCE
20. MAINTENANCE: THE OWNER OF THIS PROPERTY AND ANY FUTURE OWNERS SHALL BE RESPONSIBLE FOR THE PROPER LANDSCAPE AND IRRIGATION MAINTENANCE OF THIS SITE AND ANY RIGHT OF WAY AREAS BETWEEN THE CURB AND PROPERTY LINES OF THIS SITE. MAINTENANCE OF THIS SITE INCLUDES, BUT IS NOT LIMITED TO, IRRIGATION INSPECTIONS AND ADJUSTMENTS, IRRIGATION SYSTEM SHUT DOWN AND START UP, IRRIGATION LEAK REPAIR, LANDSCAPE WEEDING, MOWING, SEEDING, FERTILIZATION, WOOD MULCH AND ROCK COVER REPLACEMENT, PRUNING, AND PLANT MATERIAL REPLACEMENT (INCLUDING ANNUAL BEDS). ALL MAINTENANCE SHOULD BE IN ACCORDANCE WITH STANDARDS SPECIFIED WITHIN THE "ALCC SPECIFICATIONS HANDBOOK" REVISED EDITION- 1996. OWNER SHOULD CONTACT LANDSCAPE CONTRACTOR OR LANDSCAPE ARCHITECT REGARDING ANY QUESTIONS RELATING TO THE LANDSCAPE OR IRRIGATION MAINTENANCE OF THIS SITE.

    EXISTING TREES
    EXISTING TREES DESIGNATED ON PLANS AS "TO REMAIN", OR MARKED FOR PROTECTION AND PRESERVATION IN THE FIELD, SHALL NOT BE REMOVED OR DAMAGED.

    NO GRADING TO OCCUR WITHIN THE CRITICAL ROOT ZONE / DRIP LINE OF EXISTING TREES. ALL GRADING AROUND EXISTING TREES TO REMAIN SHALL BE APPROVED BY THE LANDSCAPE ARCHITECT.

    PRIOR TO CONSTRUCTION, ALL PROTECTED TREES SHALL HAVE ORANGE PROTECTION BARRIER FENCING ERECTED AT A HEIGHT OF 3' OR GREATER. FENCING TO BE SUPPORTED BY STURDY STOCK, CAPABLE OF SUPPORTING FENCING UNTIL ALL CONSTRUCTION OPERATIONS ARE COMPLETED. PLACE NO CLOSER THAN 6' FROM TRUNK, OR ONE HALF (½) OF THE DRIP LINE, WHICHEVER IS GREATER. WITHIN THE PROTECTED ZONE THERE SHALL BE NO MOVEMENT OF EQUIPMENT OR STORAGE OF EQUIPMENT, MATERIALS, WAIST, DEBRIS, OR FILL, UNLESS APPROVED BY THE LANDSCAPE ARCHITECT.

    AVOID CUTTING SURFACE ROOTS WHEREVER POSSIBLE. SIDEWALKS AND PAVING LEVELS SHOULD BE CONTOURED SUFFICIENTLY TO AVOID SUCH. ROOT CUTS FROM EXCAVATION SHOULD BE DONE RAPIDLY. SMOOTHE FLUSH CUTS SHOULD BE MADE. BACKFILL BEFORE ROOTS HAVE A CHANCE TO DRY OUT, AND THOROUGHLY WATER THE TREE IMMEDIATELY.

General

The property herein is subject to all applicable requirements of Lone Tree Municipal Code, except as may otherwise be addressed in an approved Planned Development or Sub-Area plan, Site Improvement Plan, Preliminary Plan, Final Plat, or other improvements and/or maintenance agreements, as applicable.

The applicant assumes responsibility to ensure the project is completed in accordance with the approved Landscape and/or Irrigation Plan and further assumes the risk associated with any changes or omissions made without prior City approval. Modifications to the landscape plan may require a landscape plan amendment as determined by the Director. Unauthorized changes or omissions may result in corrective actions, delay of permits, or citations for zoning violations with associated fines and legal measures.

Access

The City of Lone Tree requires that maintenance access be provided to all storm drainage facilities to ensure the continuous operational capabilities of the system. The property owner shall be responsible for the maintenance of all drainage facilities, including inlets, pipes, culverts, channels, ditches, hydraulic structures and detention basins located on their land, unless modified by an improvements agreement. Should the owner fail to adequately maintain said facilities, the City of Lone Tree shall have the right to enter said land for the purposes of operations and maintenance. All such maintenance costs will be assessed to the property owner.

Maintenance Responsibilities

It shall be the responsibility of the owner (or responsible association or district, as may be identified by maintenance agreements) to maintain all improvements on the property in a state of good repair, to ensure all irrigation is functional, and to ensure all plantings are alive, consistent with the approved landscape and irrigation plan and Lone Tree Municipal Code.

Within sight triangles and sight easements, as shown, limited landscaping shall be allowed with no solid structures permitted, as stated in the City of Lone Tree's Landscape Design Guidelines and Standards. Landscaping within the sight triangle shall be maintained by the property owner or responsible association or district, as may be identified by maintenance agreements.

EXISTING TREE PROTECTION DIRECTIONS:

PROTECTIVE FENCING:

FOUR FEET HEIGHT PROTECTIVE FENCING IS TO BE INSTALLED AROUND THE EXISTING TREES TO REMAIN PRIOR TO CONSTRUCTION ON THIS SITE. CONTRACTOR IS TO TAKE PRECAUTIONS TO ENSURE THAT EXISTING ROOTS AND LIMBS ARE NOT DAMAGED DURING EXCAVATION ADJACENT TO TREES. FENCING IS TO BE INSTALLED BELOW THE EDGE OF THE CANOPY OF THE EXISTING TREES TO REMAIN. FENCING IS TO REMAIN IN PLACE FOR THE DURATION OF CONSTRUCTION.

IF ROOT PRUNING IS NECESSARY FOR GRADING, EXCAVATING, OR INSTALLATION OF IRRIGATION SYSTEM, ALL ROOT PRUNING IS TO TAKE PLACE OUTSIDE OF THE PROTECTIVE FENCING AROUND EACH TREE. CONTRACTOR IS TO TRENCH 12" AWAY FROM PROTECTIVE FENCING. ANY ROOTS LARGER THAN 2" ARE TO BE SAW CUT. CONTRACTOR IS TO HAND DIG ANY TRENCHES AND SAW CUT ANY INTERFERING ROOTS INSIDE THE PROTECTIVE FENCE AREAS.

WATERING, MULCHING, AND FERTILIZATION:

PRIOR TO CONSTRUCTION CONTRACTOR IS TO PLACE A 4" DEPTH OF WOOD CHIPS OR MULCH INSIDE THE PROTECTIVE FENCING OF EXISTING TREES TO REMAIN. CONTRACTOR IS TO PROVIDE REGULAR DEEP WATERING TO ALL EXISTING TREES TO REMAIN THROUGHOUT CONSTRUCTION. DURING CONSTRUCTION A SLOW-RELEASE NITROGREN FERTILIZER IS TO BE APPLIED AROUND THE BASE OF EACH TREE AT A RATE OF 2 LBS. PER 1000 S.F. (USE DRIP LINE OF TREE TO CALCULATE SQUARE FOOTAGE).

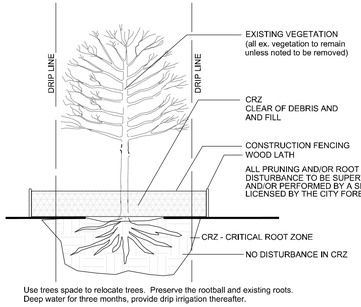

Use trees spade to relocate trees. Preserve the rootball and existing roots.
Deep water for three months, provide drip irrigation thereafter.

L2.0 EXISTING TREE PROTECTION DETAIL

TOWN OF PARKER PLANTING STANDARDS

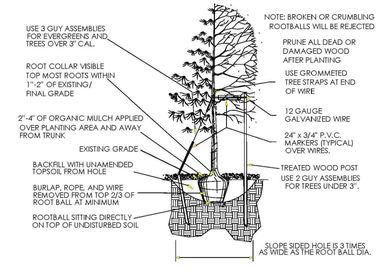

- Excavate planting holes with sloping sides. Make excavations at least three times as wide as the root ball diameter and no deeper than the distance from the top most roots in the root ball to the bottom of the root ball to allow for settling. Do not disturb soil at bottom of planting holes, but do score the sides of the planting hole. The planting area shall be loosened and aerated at least three times the diameter of the root ball. Backfill shall consist of existing on site topsoil – no amendments shall be used unless otherwise specified.
- Trees shall be planted with the root collar/flare visible above grade AND two or more structural roots located within the top 1" to 2" of the root ball/finished grade measured 3" to 4" from trunk. This includes trees that are set on slopes (see slope planting detail). Trees that do not have a visible root collar shall be rejected. Do not cover the root ball with soil.
- When root ball will remain intact, cut off bottom ¼ of wire basket before placing tree in hole, cut off remainder of basket AFTER tree is set in hole, remove basket completely. At a minimum, the top 2/3 of the burlap and basket shall be removed from the root ball on all trees. Remove all nylon ties, twine, rope and burlap. Remove unnecessary packing material.
- Form soil into a 3" to 5" tall watering ring (saucer) around planting area. This is not necessary in irrigated turf areas. Apply 2" to 4" depth of specified mulch over planting area and inside saucers, away from trunk.
- Staking and guying of trees is optional in most planting situations. In areas of extreme winds, or on steep slopes, staking may be required to stabilize trees. Staking and guying must be removed within 1 year of planting date.
- Tree wrap is *not* to be used on any new plantings, except in late fall planting situations, and only then after consultation with the Town Arborist.
- Resetting of improperly planted trees will only be allowed if it is determined that doing so will in no way compromise the root ball, and shall only be done with approval of the Town Arborist.

11

TOWN OF PARKER PLANTING DETAIL – SHRUBS

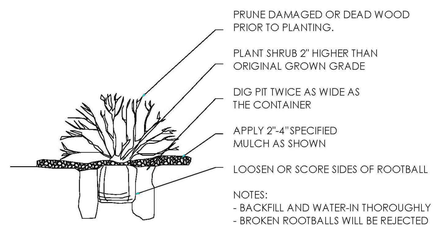

TOWN OF PARKER TREE PLANTING DETAIL - SLOPES

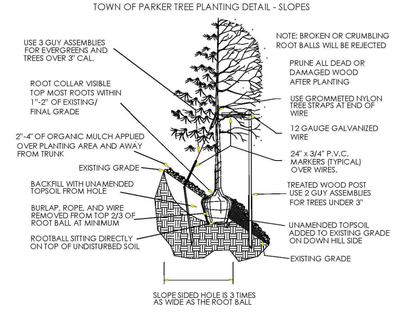

NATURAL DESIGN SOLUTIONS
Landscape Architecture
Land Planning · Irrigation Design
5539 Colt Drive, Longmont, CO 80503
(303) 443-0388 · neil@ndscolorado.com

NO.	DATE	REVISION DESCRIPTION

CIVIL ENGINEERING CONSULTANT:
Strategic Land Solutions, Inc.
Civil Engineering • Land Planning • Entitlements
2595 PONDEROSA ROAD
FRANKTOWN, CO 80116
720.384.7661 Phone
rpalmer@strategicls.net
Robert J. Palmer, PE
President

McDonald's®
THESE PLANS AND SPECIFICATIONS ARE THE PROPERTY OF McDONALD'S CORPORATION AND SHALL NOT BE REPRODUCED WITHOUT THEIR WRITTEN PERMISSION.

OFFICE: ROCKY MOUNTAIN REGION
ADDRESS: 4643 S. ULSTER STREET, SUITE 1300, DENVER, COLORADO 80237

STREET ADDRESS: 10950 S. PARKER ROAD
CITY: PARKER
STATE: COLORADO
COUNTY: DOUGLAS
STATE STORE #: 50162
NATIONAL #: 7462
REGIONAL DWG. NO: -

SCALE: 1"=20'	McD RE: BOWAN
DATE: 03/13/2025	McD P/Cm: MANN
DESIGNED BY: JRO	
DRAWN BY: JRO	FILE NAME: CURRENT.DWG
CHECKED BY: NAM	SLS Jb: 14-001-67

DRAWING TITLE: LANDSCAPE DETAILS & NOTES

SHEET NO: LS2.0

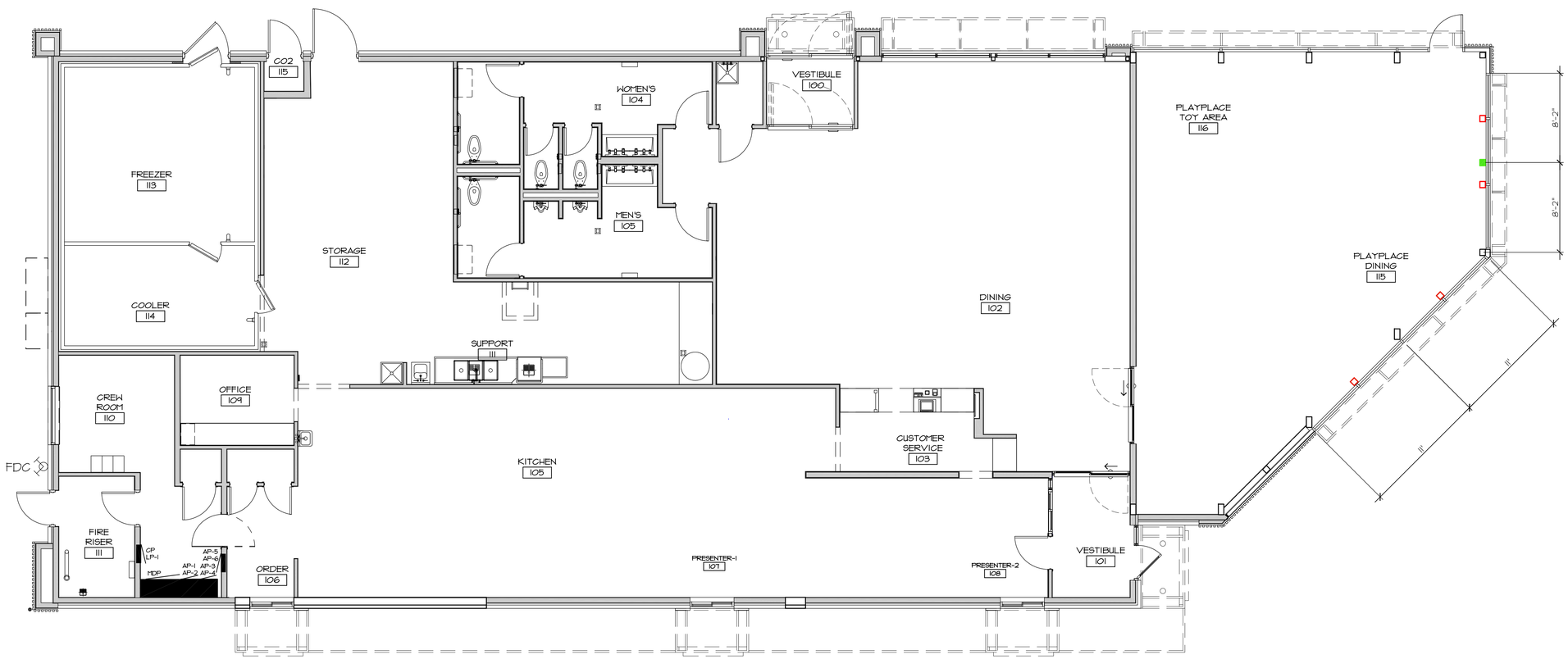

1 FLOOR PLAN
SCALE : 3/16" = 1'-0"

NORTH

Arris Architecture, LLC
3436 New Castle Dr.
Loveland, CO 80538

970.988.6302
corey.stinar@arrisinc.net

©COPYRIGHT
These drawings and specifications are the confidential and proprietary property of McDonald's USA, LLC and shall not be copied or reproduced without written authorization. The contract documents were prepared for use on this specific site in conjunction with its issue date and are not suitable for use on a different site or at a later time. Use of these drawings for reference or example on another project requires the services of properly licensed architects and engineers. Reproduction of the contract documents for reuse on another project is not authorized.

PREPARED FOR:
McDonalds
STORE #005-0162
10950 S. PARKER ROAD
PARKER, COLORADO

McDonalds Corporation
4643 S. Ulster Street
Suite 1300
Denver, CO 80111

ISSUE	DATE
-	-

PROJECT #: 0826
DRAWN BY: CS
CHECK BY:

SHEET TITLE:
FLOOR PLAN

DRAWING NO:
A2.01

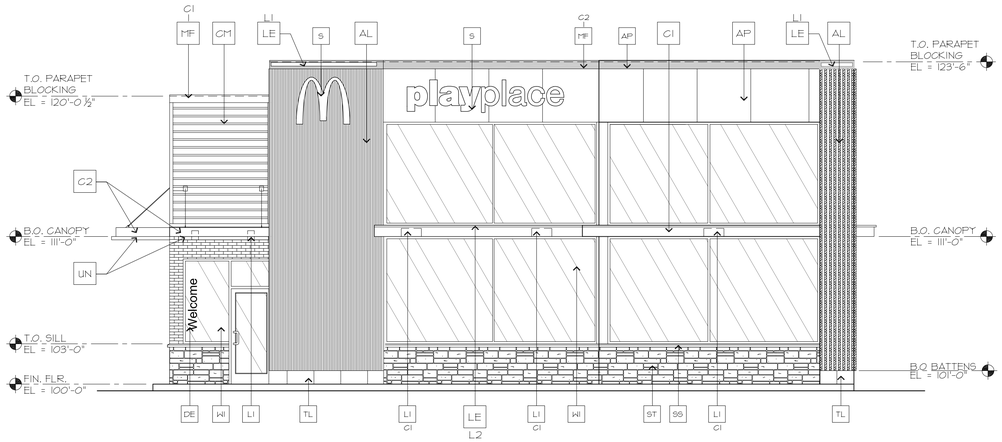

1 SOUTH ELEVATION
SCALE : 3/16" = 1'-0"

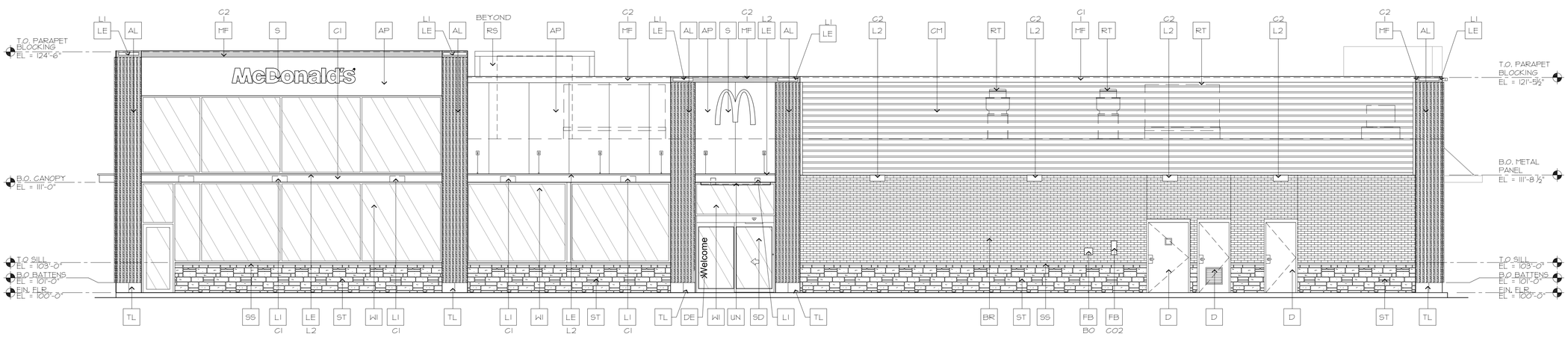

2 EAST ELEVATION
SCALE : 3/16" = 1'-0"

Everything Community Development is reviewing needs to be on these plans. Show guard rail on elevations and this site plan.

KEY NOTES:

- AL — ALUMINUM BATTEN SYSTEM
  SIZE: 2"X2" PROFILE
  COLOR: WOOD GRAIN, BACKRAIL UNFINISHED, ENDCAP PAINTED TO MATCH
  SUBSTRATE: 1/2" EXTERIOR HIGH DENSITY OVERLAY (HDO) PLYWOOD, BB, GROUP 1, HDO BOTH FACES, APA TRADEMARKED. COURSE GRIT SAND SURFACES PRIOR TO PRIMING. PRIME AND PAINT BOTH SIDES AND ALL EDGES.
  SUBSTRATE COLOR: "IRON ORE" 7069 BY SHERWIN WILLIAMS
- AP — ALPOLIC METAL PANEL (COLOR: RAL 7022)
- BM — BRAKE METAL PANEL
  COLOR: PAINT "HARVEST MOON" #232-5 BY VALSPAR
- BR — MODULAR FACE BRICK
  B1 — COLOR:
  B1 = "ONYX" GRAIN, BY SUMMIT BRICK
- C1 — ALUMINUM CANOPY SYSTEM W/FASCIA
  COLOR: WHITE
- C2 — ALUMINUM CANOPY SYSTEM
  COLOR: RAL 7022
- C3 — ALUMINUM CANOPY TIEBACK
  COLOR: RAL 7022
  GC TO PROVIDE CONTINUOUS BLOCKING ON WALL BEHIND TIEBACKS
- CJ — CONTROL JOINT
  1 — TYPE: 1 = ALPOLIC
- CM — 7" REVEAL METAL WALL PANEL SYSTEM BY METAL ERA
  C1 — COLOR:
  C1 = WEATHERED ZINC
- D — HOLLOW METAL DOOR
  PAINT: "GAUNTLET GRAY" SW-7017 BY SHERWIN WILLIAMS
- DE — DECAL BY GRAPHICS SUPPLIER
  SURFACE APPLIED, FIELD INSTALLED, PRE CUT, PRE SPACED.
  SUPPLIERS:
  VOMELA (865) 330-7337, ann.bowen@vomela.com
  GFX INTERNATIONAL (847) 543-4600, mcdonaldsdecor@gfxi.com
- EJ — EXPANSION JOINT
- FB — FILL BOX
  CO2 — CO2 = BULK CO2 FILL BOX (EQPM SCHEDULE ITEM 49.00)
  BO — BOX ON FLAT BOX FOR BOLLARD PROTECTION
- GR — GUARD RAIL -SEE CIVIL SITE PLAN FOR EXACT LOCATION AND LENGTH
  PAINT: "IRON ORE" 7069 BY SHERWIN WILLIAMS
- LI — EXPOSED DOWN LIGHT FOR PLAYPLACE GENERATOR
  COLOR: GOLD
- L2 — RADIAL SCONCE LIGHT FIXTURE - SEE ELECTRICAL
  C1 — COLOR:
  C1= WHITE
  C2= MATCH RAL 7022
- LE — ACCENT LIGHTING - SEE ELECTRICAL
  L1 — LED LIGHT:
  L1 = SLIM LED (DOWN ONLY)
  L2 = INTEGRAL CANOPY FIXTURE
  L3 = UP ONLY FLOOD FIXTURE
- MF — METAL FASCIA
  1 — TYPE:
  C1 — 1 = PRE-FAB ANCHOR-TITE FASCIA
  2 = BOTTOM TRIM AT METAL REVEAL PANEL
  3 = VERTICAL TRIM AT METAL REVEAL PANEL CORNERS, CLOSURES
  COLOR:
  C1= WEATHERED ZINC (FLAT FACTORY FINISHED)
  C2= RAL 7022 (FLAT FACTORY FINISHED)
- NB — 4400 SERIES KNOX BOX, MOUNTED 5-6' AFF, LOCATED ADJACENT TO FIRE RISER ROOM. VERIFY WITH FIRE MARSHAL
- PT — (RMHC) COIN COLLECTOR
  MODEL: #WPT STD CALL 1-888-743-7435 TO ORDER
- RO — ROOF DRAIN OVERFLOW PIPE PAINT TO MATCH SURROUNDING MATERIAL
- RS — ROOF-TOP EQUIPMENT SCREEN (BEYOND). COLOR TO MATCH ALPOLIC METAL PANEL COLOR RAL 7022
- RT — ROOF-TOP EQUIPMENT
- S — McDONALD'S SIGNAGE BY OTHERS - UNDER SEPARATE PERMIT.
  C1 — COLOR:
  C1 = WEATHERED ZINC RACEWAY
  C2 = RAL 7022 RACEWAY
- SD — NEW SLIDING DOOR - STANLEY DURA-GLIDE SERIES 3000
- SS — STONE SILL, TELLURIDE STONE OKLAHOMA BLUE SILL, 2.5-3"x2.5-3"x24"
- ST — STONE VENEER, TELLURIDE STONE SAWN THIN VENEER, HERITAGE BILTMORE DIMENSIONAL
- TL — TILE OVER 1/2" CEMENT BOARD
  C1 — C1= EUROWEST ABSOLUTE BLACK 6"x24", GROUT: MAPEI 47 CHARCOAL
- WI — EXTERIOR WINDOW ASSEMBLY - TEMPERED GLASS
  COLOR: DARK BRONZE
- WQ — DRIVE-THRU WINDOW BY READY ACCESS
  MODEL: 600 SERIES, 36" SERVICE HEIGHT WITH TRANSOM, MANUAL OPEN; ELECTRONIC RELEASE
  XX — COLOR: DEEP BRONZE
  SLIDE DIRECTION: RL = RIGHT TO LEFT
  LR = LEFT TO RIGHT
- UN — METAL UNDERSCORE
  COLOR: GOLD

ARRIS ARCHITECTURE
Arris Architecture, LLC
285 Commander Dr.
Erie, CO 80516

970.988.6302
corey.stinar@arrisinc.net

© COPYRIGHT
These drawings and specifications are the confidential and proprietary property of McDonald's USA, LLC and shall not be copied or reproduced without written authorization. The contract documents were prepared for use on this specific site in conjunction with its issue date and are not suitable for use on a different site or at a later time. Use of these drawings for reference or example on another project requires the services of properly licensed architects and engineers. Reproduction of the contract documents for reuse on another project is not authorized.

PREPARED FOR:
McDonalds
STORE #005-0162
10950 S. PARKER ROAD
PARKER, COLORADO

McDonald's Corporation
110 N. Carpenter St.
Chicago, IL 60607

ISSUE	DATE
-	-

PROJECT #: 0826
DRAWN BY: CS
CHECK BY:
SHEET TITLE:
EXTERIOR ELEVATIONS

DRAWING NO:
A3.01

Per DDS X.A.2.c.i. 1-2, show transparency calculations for all facades.

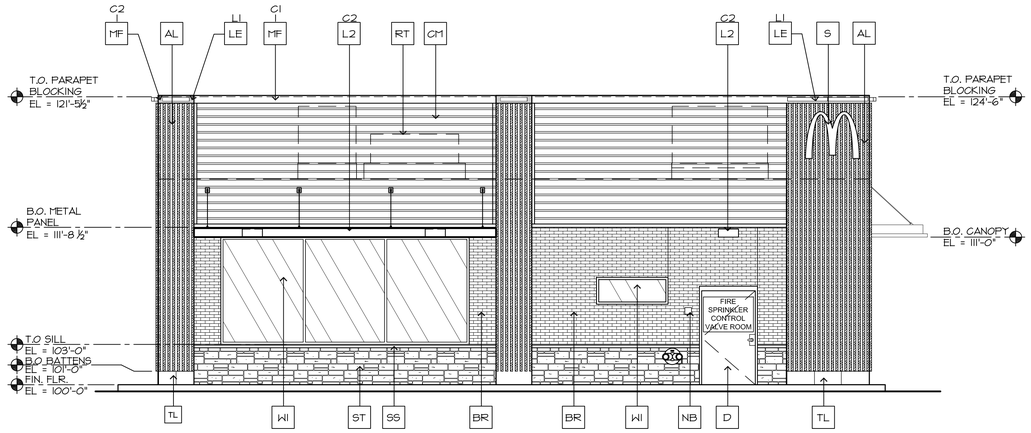

1 NORTH ELEVATION
SCALE : 1/4" = 1'-0"

Show wall-mounted electrical equipment, add note that it will be painted to match adjacent wall.

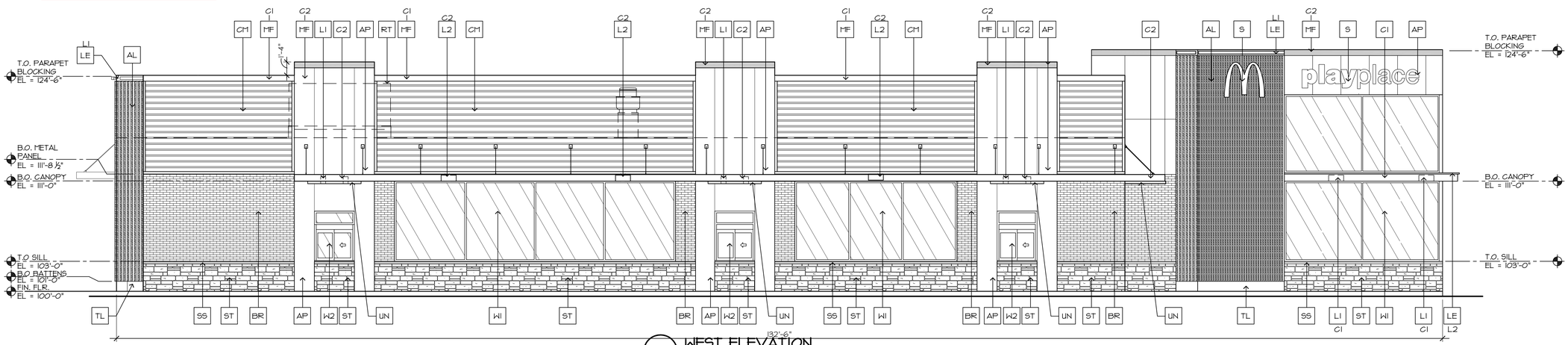

2 WEST ELEVATION
SCALE : 1/4" = 1'-0"

KEY NOTES:

- AL — ALUMINUM BATTEN SYSTEM
  SIZE: 2"X2" PROFILE
  COLOR: WOOD GRAIN, BACKRAIL UNFINISHED, ENDCAP PAINTED TO MATCH
  SUBSTRATE: 1/2" EXTERIOR HIGH DENSITY OVERLAY (HDO) PLYWOOD, BB, GROUP 1, HDO BOTH FACES, APA TRADEMARKED.
  COURSE GRIT SAND SURFACES PRIOR TO PRIMING. PRIME AND PAINT BOTH SIDES AND ALL EDGES.
  SUBSTRATE COLOR: "IRON ORE" 7069 BY SHERWIN WILLIAMS
- AP — ALPOLIC METAL PANEL (COLOR: RAL 7022)
- BM — BRAKE METAL PANEL
  COLOR: PAINT "HARVEST MOON" #232-5 BY VALSPAR
- BR — MODULAR FACE BRICK
  B1 — COLOR:
  B1 = "ONYX" GRAIN, BY SUMMIT BRICK
- C1 — ALUMINUM CANOPY SYSTEM W/FASCIA
  COLOR: WHITE
- C2 — ALUMINUM CANOPY SYSTEM
  COLOR: RAL 7022
- C3 — ALUMINUM CANOPY TIEBACK
  COLOR: RAL 7022
  GC TO PROVIDE CONTINUOUS BLOCKING ON WALL BEHIND TIEBACKS
- CJ — CONTROL JOINT
  1 — TYPE: 1 = ALPOLIC
- CM — 7" REVEAL METAL WALL PANEL SYSTEM BY METAL ERA
  C1 — COLOR:
  C1 = WEATHERED ZINC
- D — HOLLOW METAL DOOR
  PAINT: "GAUNTLET GRAY" SW-7017 BY SHERWIN WILLIAMS
- DE — DECAL BY GRAPHICS SUPPLIER
  SURFACE APPLIED, FIELD INSTALLED, PRE CUT, PRE SPACED.
  SUPPLIERS:
  VOMELA (865) 330-7337, ann.bowen@vomela.com
  GFX INTERNATIONAL (847) 543-4600, mcdonaldsdecor@gfxi.com
- EJ — EXPANSION JOINT
- FB — FILL BOX
  CO2 — CO2 = BULK CO2 FILL BOX (EQPM SCHEDULE ITEM 49.00)
  BO = BULK OIL FILL BOX (EQPM SCHEDULE ITEM 700.18)
- GR — GUARD RAIL -SEE CIVIL SITE PLAN FOR EXACT LOCATION AND LENGTH
  PAINT: "IRON ORE" 7069 BY SHERWIN WILLIAMS
- LI — RECESSED DOWN LIGHT FIXTURE - SEE ELECTRICAL
  COLOR: GOLD
- L2 — RADIAL SCONCE LIGHT FIXTURE - SEE ELECTRICAL
  C1 — COLOR:
  C1= WHITE
  C2= MATCH RAL 7022
- LE — ACCENT LIGHTING - SEE ELECTRICAL
  L1 — LED LIGHT:
  L1 = SLIM LED (DOWN ONLY)
  L2 = INTEGRAL CANOPY FIXTURE
  L3 = UP ONLY FLOOD FIXTURE
- MF — METAL FASCIA
  1 — TYPE:
  C1 — 1 = PRE-FAB ANCHOR-TITE FASCIA
  2 = BOTTOM TRIM AT METAL REVEAL PANEL
  3 = VERTICAL TRIM AT METAL REVEAL PANEL CORNERS, CLOSURES
  COLOR:
  C1= WEATHERED ZINC (FLAT FACTORY FINISHED)
  C2= RAL 7022 (FLAT FACTORY FINISHED)
- NB — 4400 SERIES KNOX BOX, MOUNTED 5-6' AFF, LOCATED ADJACENT TO FIRE RISER ROOM. VERIFY WITH FIRE MARSHAL
- PT — (RMHC) COIN COLLECTOR
  MODEL: #WPT STD CALL 1-888-743-7435 TO ORDER
- RO — ROOF DRAIN OVERFLOW PIPE PAINT TO MATCH SURROUNDING MATERIAL
- RS — ROOF-TOP EQUIPMENT SCREEN (BEYOND). COLOR TO MATCH ALPOLIC METAL PANEL COLOR RAL 7022
- RT — ROOF-TOP EQUIPMENT
- S — McDONALD'S SIGNAGE BY OTHERS - UNDER SEPARATE PERMIT.
  C1 — COLOR:
  C1 = WEATHERED ZINC RACEWAY
  C2 = RAL 7022 RACEWAY
- SD — NEW SLIDING DOOR - STANLEY DURA-GLIDE SERIES 3000
- SS — STONE SILL, TELLURIDE STONE OKLAHOMA BLUE SILL, 2.5-3"x2.5-3"x24"
- ST — STONE VENEER, TELLURIDE STONE SAWN THIN VENEER, HERITAGE BILTMORE DIMENSIONAL
- TL — TILE OVER ½" CEMENT BOARD
  C1 — C1= EUROWEST ABSOLUTE BLACK 6"x24", GROUT: MAPEI 47 CHARCOAL
- WI — EXTERIOR WINDOW ASSEMBLY - TEMPERED GLASS
  COLOR: DARK BRONZE
- W2 — DRIVE-THRU WINDOW BY READY ACCESS
  MODEL: 600 SERIES, 36" SERVICE HEIGHT WITH TRANSOM, MANUAL OPEN; ELECTRONIC RELEASE
  XX — COLOR: DEEP BRONZE
  SLIDE DIRECTION: RL = RIGHT TO LEFT
  LR = LEFT TO RIGHT
- UN — METAL UNDERSCORE
  COLOR: GOLD

ARRIS ARCHITECTURE
Arris Architecture, LLC
285 Commander Dr.
Erie, CO 80516

970.988.6302
corey.stinar@arrisinc.net

© COPYRIGHT
These drawings and specifications are the confidential and proprietary property of McDonald's USA, LLC and shall not be copied or reproduced without written authorization. The contract documents were prepared for use on this specific site in conjunction with its issue date and are not suitable for use on a different site or at a later time. Use of these drawings for reference or example on another project requires the services of properly licensed architects and engineers. Reproduction of the contract documents for reuse on another project is not authorized.

PREPARED FOR:
McDonalds
STORE #005-0162
10950 S. PARKER ROAD
PARKER, COLORADO

McDonald's Corporation
110 N. Carpenter St.
Chicago, IL 60607

ISSUE	DATE
-	-

PROJECT #: 0826
DRAWN BY: CS
CHECK BY:

SHEET TITLE:
EXTERIOR ELEVATIONS

DRAWING NO:
A3.02

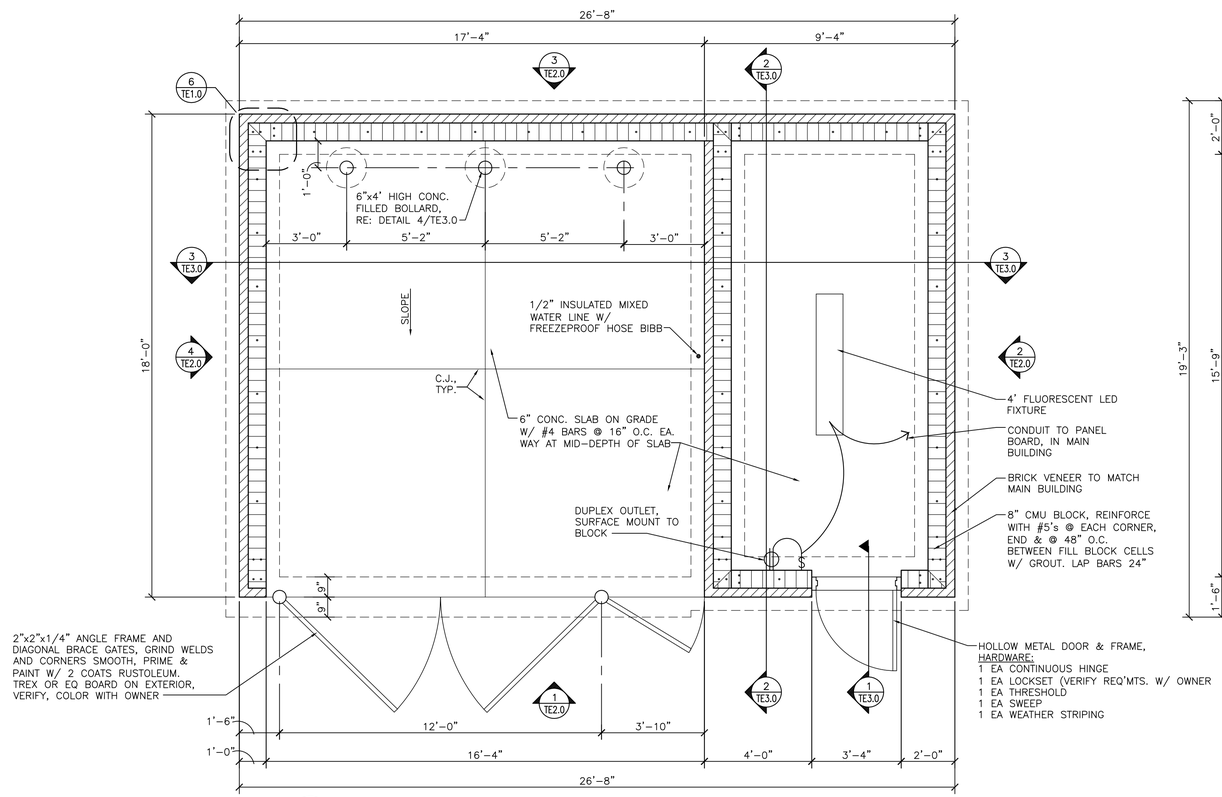

1 TRASH ENCLOSURE PLAN
SCALE: 3/8"=1'-0"

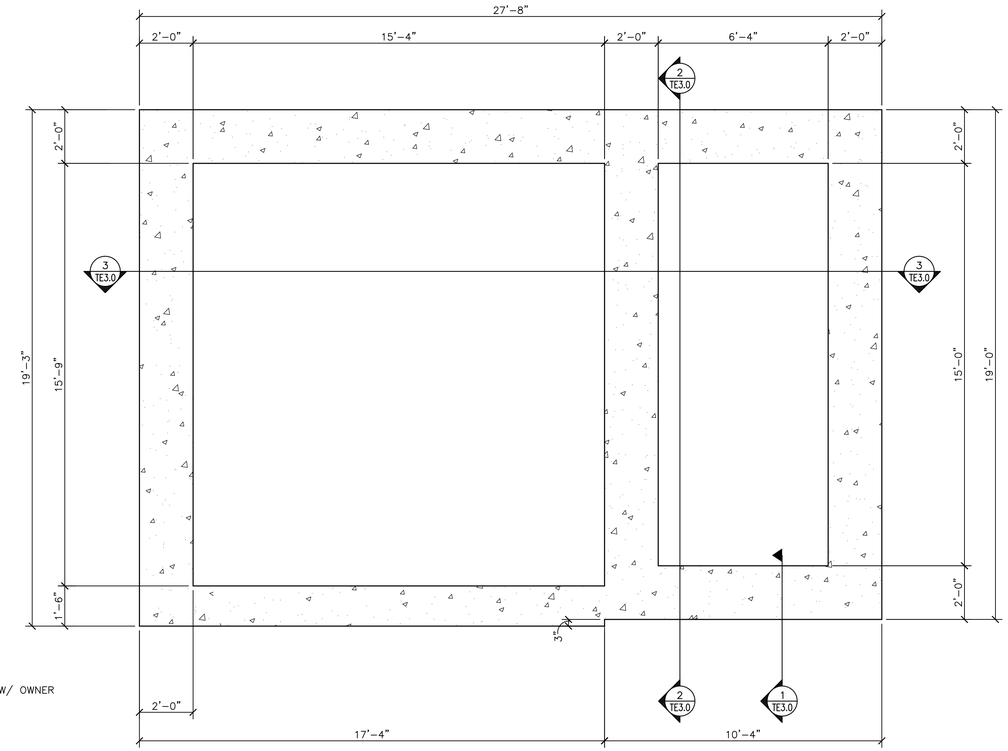

2 FOUNDATION PLAN
SCALE: 3/8"=1'-0"

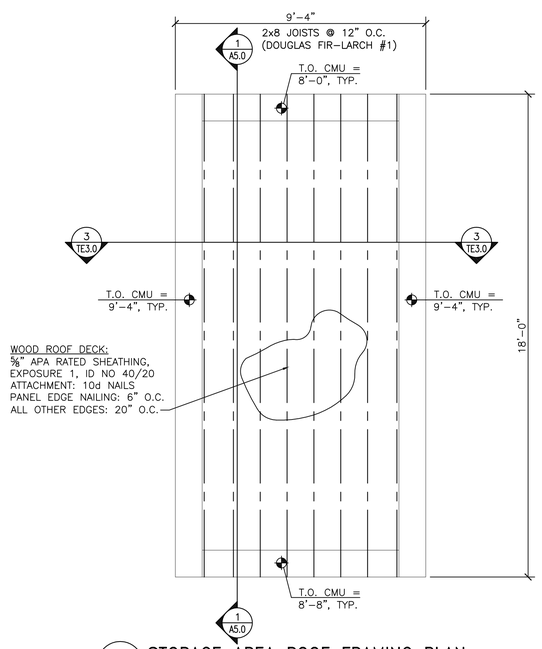

3 STORAGE AREA ROOF FRAMING PLAN
SCALE: 3/8"=1'-0"

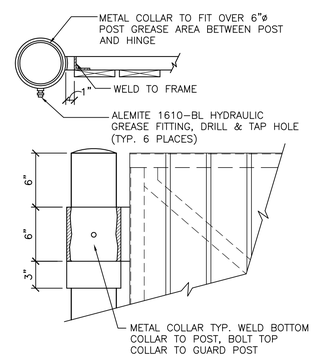

4 GATE HINGE DETAIL
SCALE:1 1/2" = 1'-0"

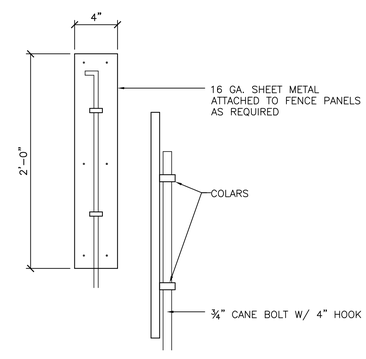

5 CAN BOLT DETAIL
SCALE:1 1/2" = 1'-0"

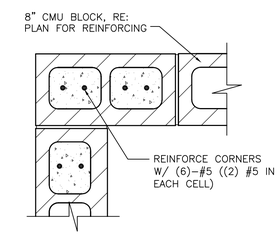

6 CMU CORNER DETAIL
SCALE:1 1/2" = 1'-0"

ARRIS ARCHITECTURE
Arris Architecture, LLC
285 Commander Dr.
Erie, CO 80516
970.988.6302
corey.stinar@arrisinc.net

©COPYRIGHT
These drawings and specifications are the confidential and proprietary property of McDonald's USA, LLC and shall not be copied or reproduced without written authorization. The contract documents were prepared for use on this specific site in conjunction with its issue date and are not suitable for use on a different site or at a later time. Use of these drawings for reference or example, or to provide a quote, requires the services of properly licensed architects and engineers. Reproduction of the contract documents for reuse on another project is not authorized.

PREPARED FOR:
McDonalds
STORE #005-0162
10950 S. PARKER ROAD
PARKER, COLORADO

McDonald's Corporation
110 N. Carpenter St.
Chicago, IL 60607

ISSUE	DATE
-	-

PROJECT #: 0826
DRAWN BY: CS
CHECK BY:

SHEET TITLE:
TRASH ENCLOSURE PLANS & DETAILS

DRAWING NO:
SHEET NO. TE1.0

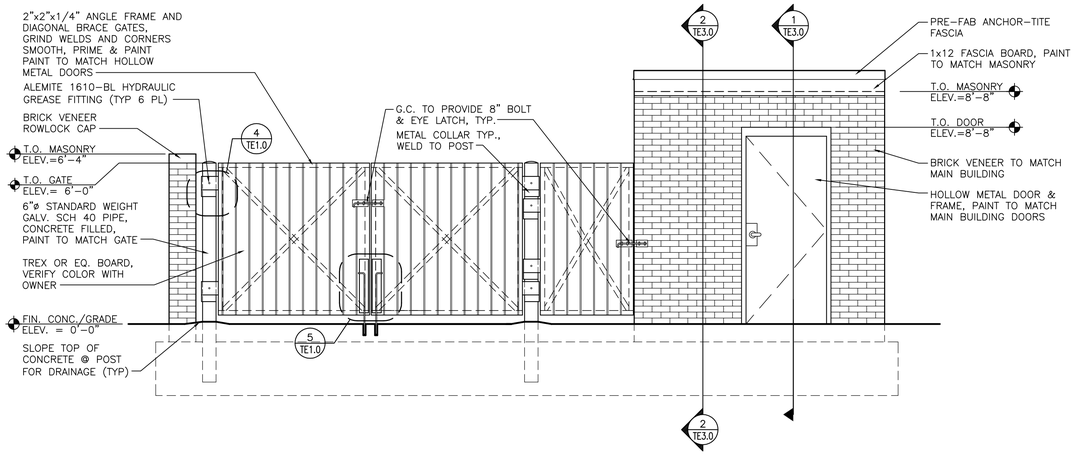

1 TRASH ENCLOSURE ELEVATION
SCALE: 3/8"=1'-0"

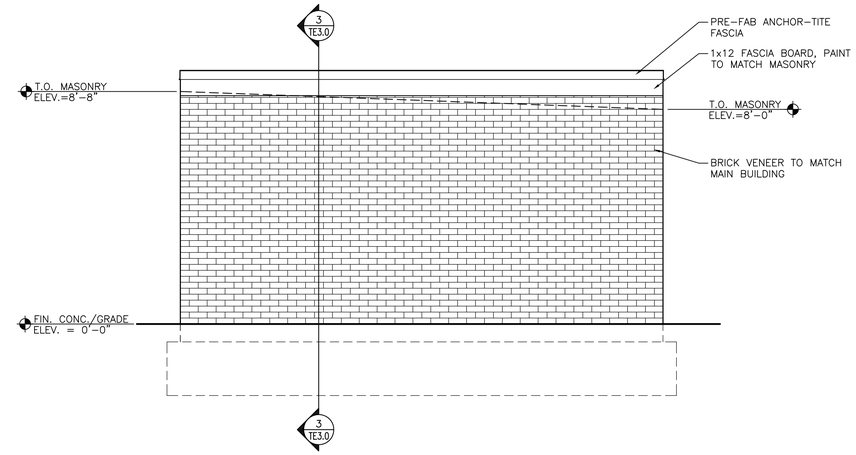

2 TRASH ENCLOSURE ELEVATION
SCALE: 3/8"=1'-0"

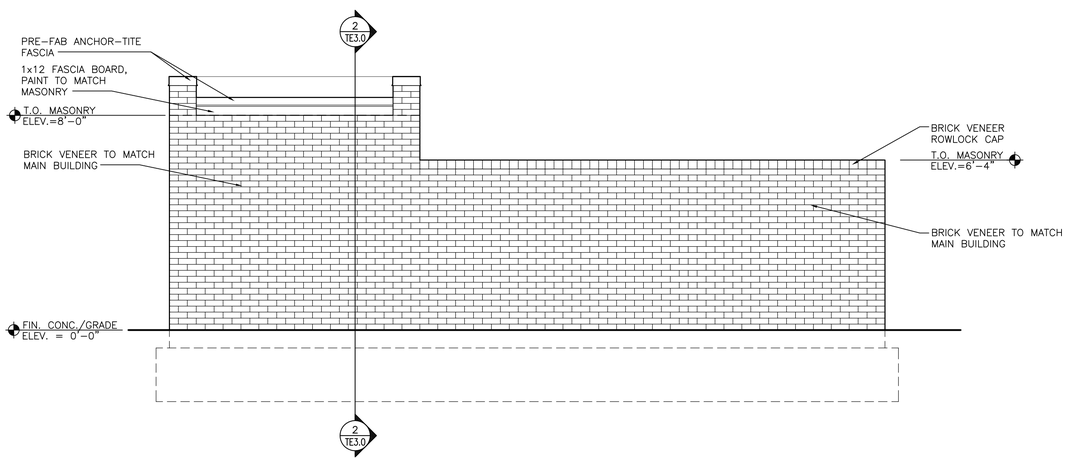

3 TRASH ENCLOSURE ELEVATION
SCALE: 3/8"=1'-0"

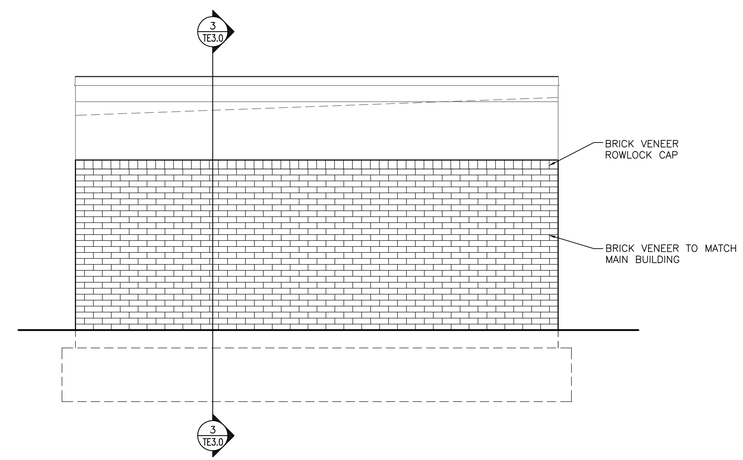

4 TRASH ENCLOSURE ELEVATION
SCALE: 3/8"=1'-0"

ARRIS ARCHITECTURE
Arris Architecture, LLC
285 Commander Dr.
Erie, CO 80516

970.988.6302
corey.stinar@arrisinc.net

©COPYRIGHT
These drawings and specifications are the confidential and proprietary property of McDonald's USA, LLC and shall not be copied or reproduced without written authorization. The site in conjunction with its issue date and are not suitable for use on a different site or at a later time. Use of these drawings for reference or example on another project requires the services of properly licensed architects and engineers. Reproduction of the contract documents for reuse on another project is not authorized.

PREPARED FOR:
McDonalds
STORE #005-0162
10950 S. PARKER ROAD
PARKER, COLORADO

McDonald's Corporation
110 N. Carpenter St.
Chicago, IL 60607

ISSUE	DATE
-	-

PROJECT #: 0826
DRAWN BY: CS
CHECK BY:

SHEET TITLE:
TRASH ENCLOSURE ELEVATIONS

DRAWING NO:
SHEET NO. TE1.1

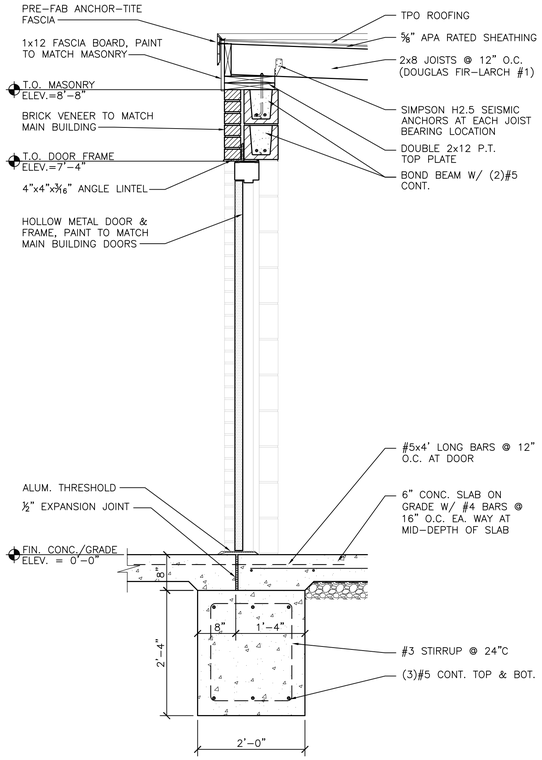

1 SECTION
SCALE: 3/4"=1'-0"

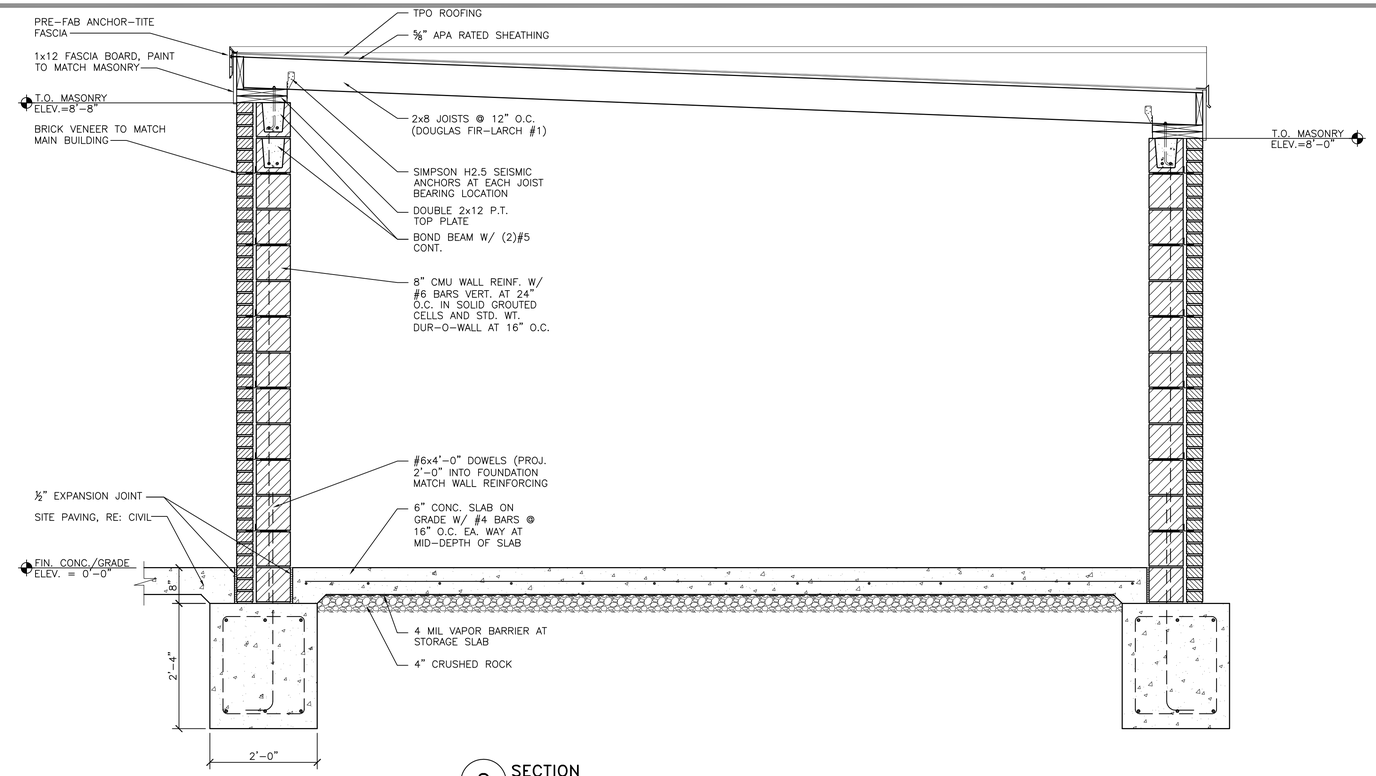

2 SECTION
SCALE: 3/4"=1'-0"

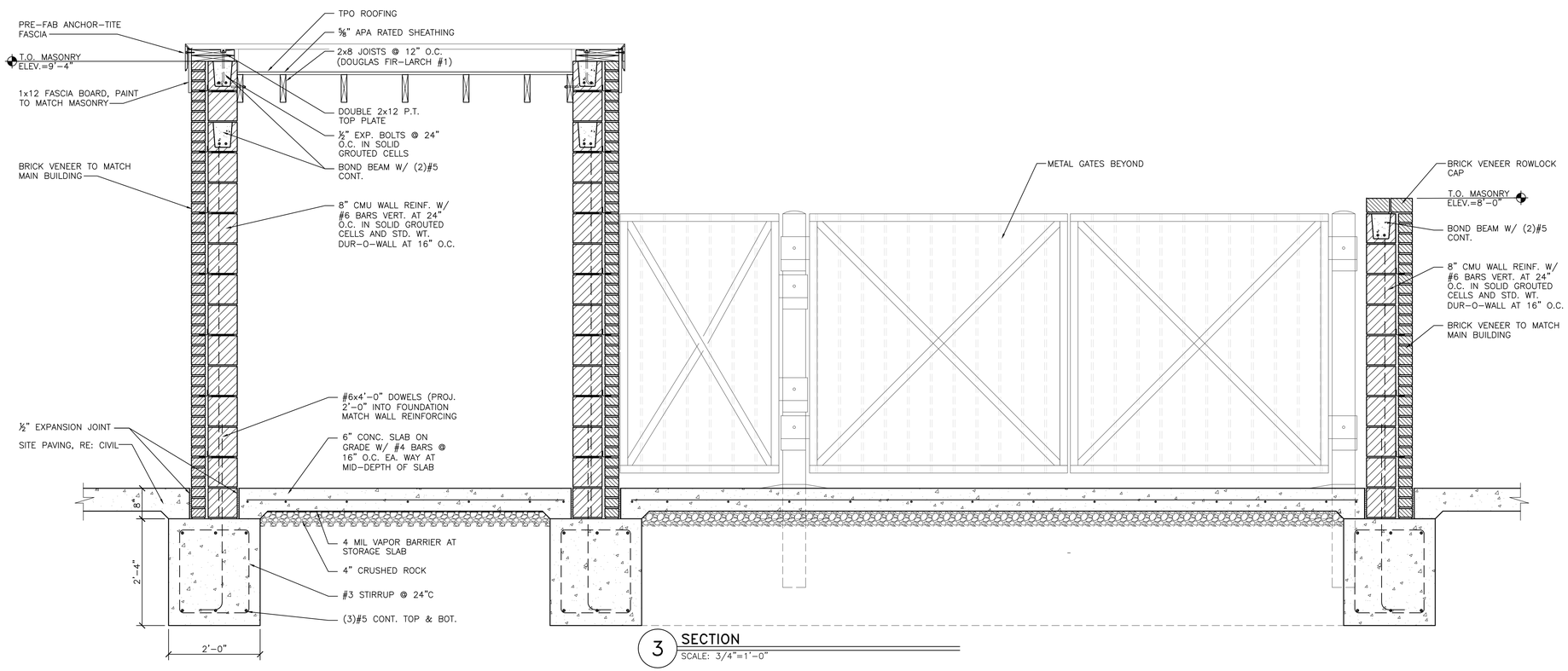

3 SECTION
SCALE: 3/4"=1'-0"

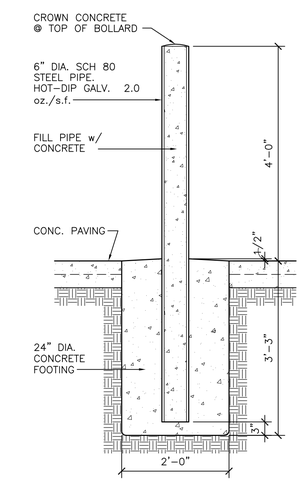

4 BOLLARD DETAIL
SCALE: 3/4"=1'-0"

ARRIS ARCHITECTURE
Arris Architecture, LLC
285 Commander Dr.
Erie, CO 80516
970.988.6302
corey.stinar@arrisinc.net

©COPYRIGHT
These drawings and specifications are the confidential and proprietary property of McDonald's USA, LLC and shall not be copied or reproduced without written authorization. The contract documents were prepared for use on this specific site in conjunction with its issue date and are not suitable for use on a different site or at a later time. Use of these drawings for reference or example on other projects requires the services of properly licensed architects and engineers. Reproduction of the contract documents for reuse on another project is not authorized.

PREPARED FOR:
McDonalds
STORE #005-0162
10950 S. PARKER ROAD
PARKER, COLORADO

McDonald's Corporation
110 N. Carpenter St.
Chicago, IL 60607

ISSUE	DATE
-	-

PROJECT #: 0826
DRAWN BY: CS
CHECK BY:
SHEET TITLE:
TRASH ENCLOSURE DETAILS

DRAWING NO:
SHEET NO. TE1.2

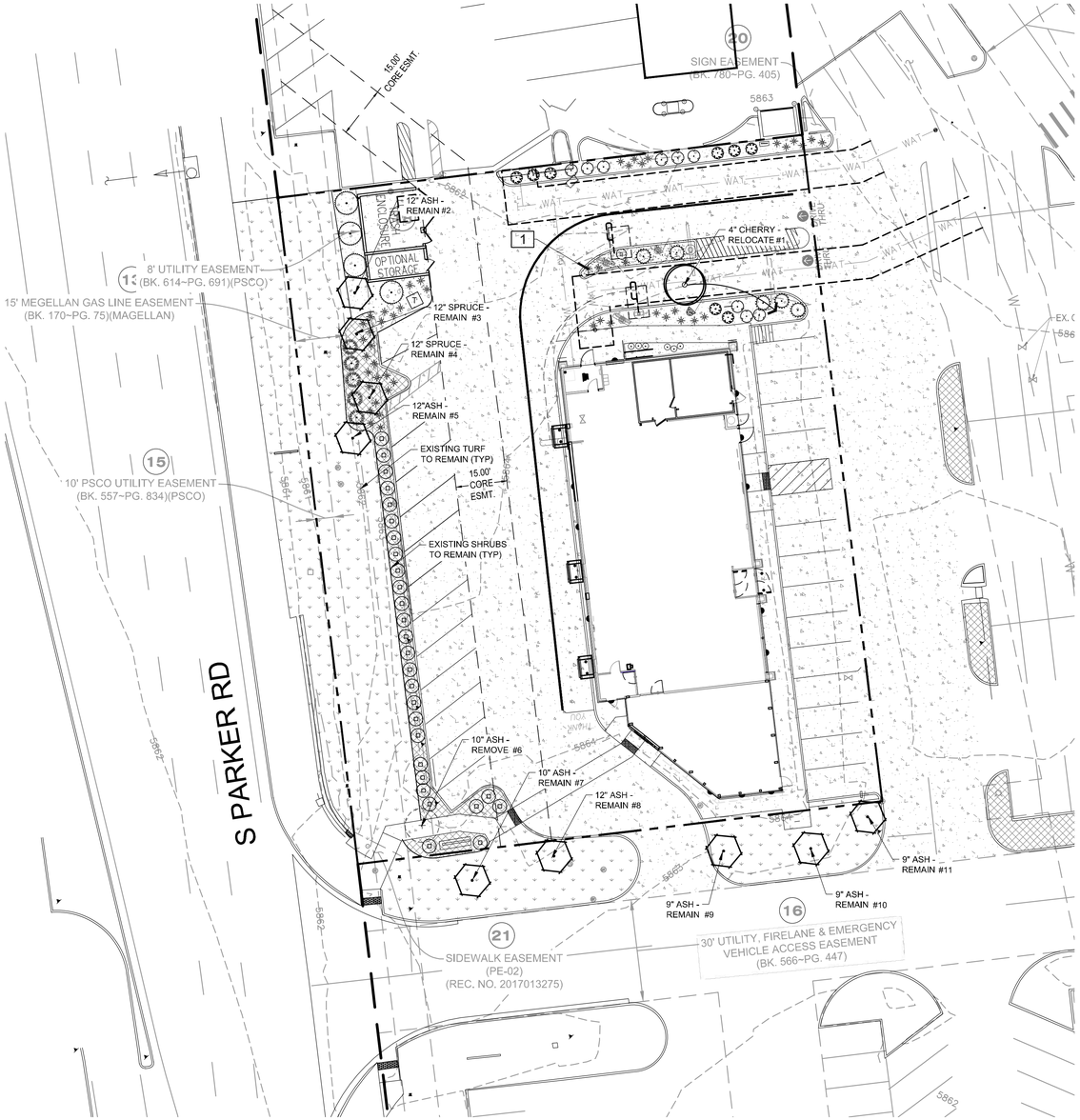

TREE CONSERVATION PLAN

SCALE: 1" = 20'

0 20 40 60

N

PLANT LEGEND

SYMBOL	QTY	BOTANICAL / COMMON NAME
TREES		
○	1	RELOCATE AS INDICATED / EXISTING TREE TO BE RELOCATED
+	1	REMOVE AS INDICATED / EXISTING TREE TO BE REMOVED
⬡	9	TO REMAIN- PROTECT DURING CONSTRUCTION / EXISTING TREE TO REMAIN

TREE MITIGATION CHART

TREE #	SPECIES	DIAMETER INCHES	MITIGATION VALUE	COMMENTS	MITIGATION INCHES
1	Prunus	4	n/a	Relocate	-
2	Fraxinus	12	n/a	Preserve	-
3	Picea	12	n/a	Preserve	-
4	Picea	12	n/a	Preserve	-
5	Fraxinus	12	n/a	Preserve	-
6	Fraxinus	10	n/a	Remove	-
7	Fraxinus	10	n/a	Preserve	-
8	Fraxinus	12	n/a	Preserve	-
9	Fraxinus	9	n/a	Preserve	-
10	Fraxinus	9	n/a	Preserve	-
11	Fraxinus	9	n/a	Preserve	-
Total		**111**	**$ -**		**0**

MITIGATION CHART ONLY SHOWS ON-SITE TREES IMPACTED BY DEVELOPMENT PROPOSAL

NO.	DATE	REVISION DESCRIPTION

CIVIL ENGINEERING CONSULTANT:

Strategic Land Solutions, Inc.
Civil Engineering • Land Planning • Entitlements
2595 PONDEROSA ROAD
FRANKTOWN, CO 80116
720.384.7661 Phone
rpalmer@strategicls.net
Robert J. Palmer, PE
President

THESE PLANS AND SPECIFICATIONS ARE THE PROPERTY OF MCDONALD'S CORPORATION AND SHALL NOT BE REPRODUCED WITHOUT THEIR WRITTEN PERMISSION.

OFFICE: ROCKY MOUNTAIN REGION

ADDRESS: 4643 S. ULSTER STREET, SUITE 1300, DENVER, COLORADO 80237

STREET ADDRESS: 10950 S. PARKER ROAD

CITY: PARKER

STATE: COLORADO

COUNTY: DOUGLAS

SITE STORE #: 500162

REGIONAL DWG. NO: -

NATIONAL #: tbd

SCALE:	1"=20'	McD RE:	BOWAN
DATE:	09/05/2022	McD P/DM:	PEDIGO
DESIGNED BY:	JRO		
DRAWN BY:	JRO	FILE NAME:	CURRENT.DWG
CHECKED BY:	JRO		SLS Job: 14-001-47

DRAWING TITLE: TREE CONSERVATION PLAN

SHEET NO: LS1.1

NDS
NATURAL DESIGN SOLUTIONS
Landscape Architecture
Land Planning · Irrigation Design
5539 Colt Drive, Longmont, CO 80503
(303) 443-0388 · neil@ndscolorado.com

Remove or note that not part of this Site Plan and will be approved under a separate CD application.

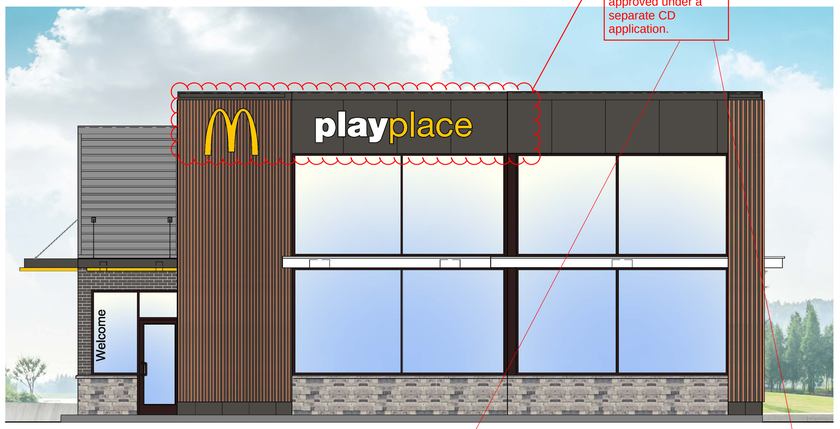

Label material on elevations.

Provide a material board to the Planning Division Office.

1 SOUTH ELEVATION
SCALE : 3/16" = 1'-0"

MATERIAL LEGEND

BRICK:
"ONYX" GRAIN, BY SUMMIT BRICK

Note percent of material.

STONE:
TELLURIDE STONE SAWN THIN VENEER, HERITAGE BILTMORE DIMENSIONAL

Note percent of material.

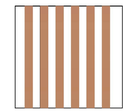

ALUMINUM BATTEN SYSTEM:
MFR: BHI INDUSTRIES
SIZE: 2"X2" PROFILE
COLOR: WOOD GRAIN,

ALPOLIC METAL PANEL: COLOR: RAL 1022

ALUMINUM CANOPY
COLOR: WHITE

GOLD UNDERSCORE

EXTERIOR WINDOW ASSEMBLY
COLOR: EXTRA DARK BRONZE

HOLLOW METAL DOORS:
PAINT: "GAUNTLET GRAY" SW-7017 BY SHERWIN WILLIAMS

Need vertical massing break(s). Per DDS X.A.3.b.iii.3). Buildings over 100 feet in length shall require a vertical massing break at a distance of 25 to 50 feet.

See McDonalds SP21-067 Chambers Rd and Hess.

2 EAST ELEVATION
SCALE : 3/16" = 1'-0"

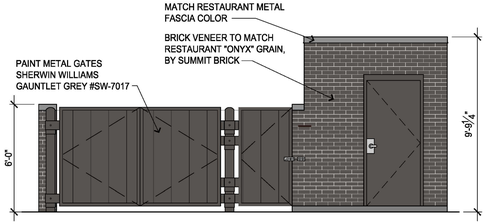

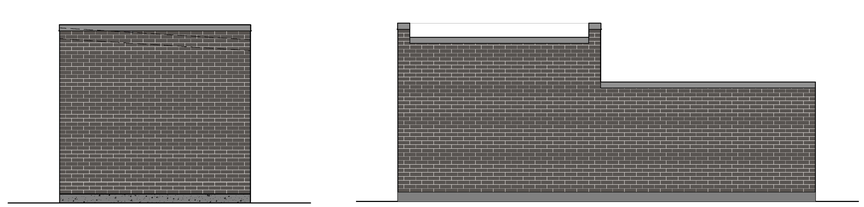

3 TRASH ENCLOSURE ELEVATIONS
SCALE : 1/4" = 1'-0"

ARRIS ARCHITECTURE
Arris Architecture, LLC
285 Commander Dr.
Erie, CO 80516

970.988.6302
corey.stinar@arrisinc.net

© COPYRIGHT
These drawings and specifications are the confidential and proprietary property of McDonald's USA, LLC and shall not be copied or reproduced without written authorization. The contract documents were prepared for use on this specific site in conjunction with its issue date and are not suitable for use on a different site or at a later time. Use of these drawings for reference or example on another project requires the services of properly licensed architects and engineers. Reproduction of the contract documents for reuse on another project is not authorized.

PREPARED FOR:
McDonalds
STORE #005-0162
10950 S. PARKER ROAD
PARKER, COLORADO

McDonald's Corporation
110 N. Carpenter St.
Chicago, IL 60607

ISSUE	DATE
-	-

PROJECT #: 0826
DRAWN BY: CS
CHECK BY:

SHEET TITLE:
EXTERIOR ELEVATIONS

DRAWING NO:
A3.01

1 NORTH ELEVATION
SCALE : 3/16" = 1'-0"

MATERIAL LEGEND

BRICK:
"ONYX" GRAIN, BY SUMMIT BRICK

STONE:
TELLURIDE STONE SAWN THIN VENEER, HERITAGE BILTMORE DIMENSIONAL

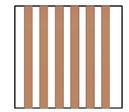

ALUMINUM BATTEN SYSTEM:
MFR: BHI INDUSTRIES
SIZE: 2"X2" PROFILE
COLOR: WOOD GRAIN,

ALPOLIC METAL PANEL: COLOR: RAL 7022

ALUMINUM CANOPY
COLOR: WHITE

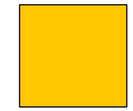

GOLD UNDERSCORE

EXTERIOR WINDOW ASSEMBLY
COLOR: EXTRA DARK BRONZE

HOLLOW METAL DOORS:
PAINT: "GAUNTLET GRAY" SW-7017 BY SHERWIN WILLIAMS

2 WEST ELEVATION
SCALE : 3/16" = 1'-0"

ARRIS ARCHITECTURE
Arris Architecture, LLC
285 Commander Dr.
Erie, CO 80516

970.988.6302
corey.stinar@arrisinc.net

©COPYRIGHT
These drawings and specifications are the confidential and proprietary property of McDonald's USA, LLC and shall not be copied or reproduced without written authorization. The contract documents were prepared for use on this specific site in conjunction with its issue date and are not suitable for use on a different site or at a later time. Use of these drawings for reference or example on another project requires the services of properly licensed architects and engineers. Reproduction of the contract documents for reuse on another project is not authorized.

PREPARED FOR:
McDonalds
STORE #005-0162
10950 S. PARKER ROAD
PARKER, COLORADO

McDonald's Corporation
110 N. Carpenter St.
Chicago, IL 60607

ISSUE	DATE
-	-

PROJECT #: 0826
DRAWN BY: CS
CHECK BY:

SHEET TITLE:
EXTERIOR ELEVATIONS

DRAWING NO:
A3.02

Project Number: SP24-012

Description: **Parker Central Area F5 L2 B1 - McDonalds**

Applied: **2/29/2024**

Approved:

Closed:

Expired:

Site Address: **10950 S PARKER RD**

City, State Zip Code: **PARKER, CO 80138**

Status: **REVISIONS REQD 2**

Parent Project: **7981**

Applicant: **Strategic Land Solution**

Owner: **MCDONALDS USA LLC**

Contractor: **Strategic Land Solution**

Details:

The applicant, Strategic Land Solution, is proposing site and building changes to an existing McDonalds including new materials, drive through reconfiguration and changes to vehicular circulation. The site is located on the east side of Parker Road south of Mainstreet.

LIST OF REVIEWS

SENT DATE	RETURNED DATE	DUE DATE	TYPE	CONTACT	STATUS	REMARKS
Review Group: ALL						
3/4/2024	3/12/2024	3/11/2024	COMPLETENESS REVIEW	Ashley Chasez	REVISIONS REQUIRED	
Notes: Emailed applicant asking for more info. Good evening, I am conducting your completeness review for the Mainstreet McDonalds Remodel and found a few documents that are missing to complete your application. Please provide a project narrative, a vicinity map, and legal description of your project as well as pay any associated fees. Once these documents are uploaded and the fees paid, then I can deem you application complete. Please let me know if you have any questions.						
3/12/2024	3/18/2024	3/19/2024	COMPLETENESS REVIEW	Ashley Chasez	APPROVED	
Notes:						
10/20/2025		11/3/2025	ONEOK 20	Clara Lucero		
Notes:						
Review Group: AUTO						
2/29/2024			ENGINEERING ADMINISTRATIVE	Tom Williams		
Notes:						
2/29/2024	3/7/2024	3/14/2024	LAND USE COMPLETENESS REVIEW	Alex Mestdagh	COMPLETED	
Notes:						

2/29/2024	3/7/2024	3/28/2024	DEVELOPMENT AGREEMENT	Michael Walton	NOT APPLICABLE	

Notes:

Review Group: SP 1ST 20

3/18/2024	4/2/2024	4/15/2024	BUILDING 20	Randy Sale	COMPLETED	See general notes

Notes:

Building Division pre-application meetings are available before applying for the building permit to discuss access requirements during construction, construction type, occupancy, allowable areas, MEP's, energy, structural, fire, etc…if needed. Please visit our website for all plan submittal requirements: Plan Review | Town of Parker - Official Website (parkeronline.org), and our most current code adoptions.
Please know the Town's Charge Back Agreement may be required for this project, specific to the building permit application. The form will be emailed to the applicant prior to the Building Pre-App meeting or upon receiving the permit application submittal. Once all required documents have been accepted and the charge back agreement form has been returned signed to the Building Division, then the full plan review process will begin.

General Comments to be aware of:
Building and/or Fire Life Safety permit application will not be accepted/reviewed until the associated site plan is approved or otherwise discussed. All plans submitted for Building's review must meet the 2021 I-Codes, ICC A117.1-2017 for accessibility, the 2020 NEC, and the referenced NFPA editions noted in the applicable codes (i.e., 2021 IFC references the 2019 edition of NFPA 72) if received by December 31, 2024. NFRC certificates, interior/exterior lighting along with the mechanical and envelope compliance path must be included with the original submittal. All Fire Permit applications and inspections will be handled through the Parker Building Division. All land use applications and the associated Grading Permit must be approved/issued per Planning and Public Works prior to the Building Permit being approved/issued.

Randy S

3/18/2024		4/15/2024	CENTURYLINK COMMUNICATIONS 20	CenturyLink		01 Review 20

Notes:

3/18/2024	4/1/2024	4/15/2024	CHERRY CREEK BASIN WATER QUALITY AUTHORITY 20	Val Endyk	ADVISORY COMMENTS	See Notes

Notes:

The Cherry Creek Basin Water Quality Authority (Authority) acknowledges notification from the Town of Parker that the proposed development plans for SP24-012, Parker Central Area F5 L2 B1 - McDonalds have been or will be reviewed by the Town of Parker for compliance with the applicable Regulation 72 construction and post-construction requirements. Based on the Authority's current policy, the Authority will no longer routinely conduct a technical review and instead the Authority will defer to the Town of Parker''s review and ultimate determination that the proposed development plans comply with Regulation 72.
If a technical review of the proposed development plan is needed, please contact LandUseReferral@ccbwqa.org. The review may include consultation with the Authority's Technical Manager to address specific questions or to conduct a more detailed Land Use Review, if warranted.

3/18/2024	4/17/2024	4/15/2024	COLORED BUILDING ELEVATIONS 20	Ashley Chasez	REVISIONS REQUIRED	01 Review 20

Notes:

See Planning Memo

3/18/2024		4/15/2024	COMCAST 20	Butch Buster		01 Review 20

Notes:

3/18/2024	4/10/2024	4/15/2024	CONST PLANS - ENVIRONMENTAL	Robert Seacat	REVISIONS REQUIRED	01 Review 20 See ENGINEERING MEMO and COMMENTS

Notes:

SP24-012 – McDonalds Remodel, Parker Central - 1st Environmental Review, 4-10-24

GENERAL COMMENTS (Initial and Interim Plan Sheets)

Please note that a CBMP Cost Estimate will be required and reviewed with the Grading Permit after all CBMP comments have been addressed and the final site plan is near approval.

1. Vehicle Tracking Control (VTC) may be required for the site if tracking becomes a problem. All dirt tracked off the site on to the adjacent private drives and parking areas must be swept up throughout the day and nightly, no exceptions. Please add a note to the plan sheets stating – "VTC PAD MAY BE REQUIRED IF TRACK OUT BECOMES A PROBLEM, ALL DIRT TRACKING MUST BE SWEPT UP IMMEDIATELY, NO EXCEPTIONS".
2. Please provide and identify a Concrete Washout (CWA) code/symbol on the plans. Add a note stating – "THE TRUE LOCATION OF THE CWA MAY BE DETERMINED BY THE TOWN AND THE ECS".
3. Please provide and identify a Masonry Work Protection (MWP) code/symbol on the plans for renovation of the building. Add a note stating – "MASONRY WORK PROTECTION IS REQUIRED FOR CONSTRUCTION WORK ON THE BUILDING".
4. Please show multiple Portable Toilet Protections (PTP), a site this size must have at least 2 portable toilets at the initial phase. Addition PTPs may be needed in the interim phase.
5. Please include within the plan set all 64 pages of the Town of Parker's CBMP Details.
6. Please include Construction Fence (CF) perimeter controls for the entire site due to the high pedestrian traffic in the area. Is the McDonalds closing for this renovation, or are you trying to stay open?
7. Add a callout/label on all properties adjacent to the project stating: "NO WORK SHALL OCCUR IN THIS AREA". These areas must be shaded for easy identification.
8. Show Inlet Protection for the two existing inlets (drive thru area and southwest corner of site) on plans using the proper legend code/symbol (IPAP, IPAN).

CAD Drawings Link:
"\\townsan\group\engineering\Stormwater\Storm Drainage and Environmental Criteria Manual\2013 Final SDECM\Appendix C CBMP Standard Details"

Grading Permit Link:
Grading Permits | Town of Parker - Official Website (parkeronline.org)

3/18/2024		4/15/2024	CONSTRUCTION PLANS - CIVIL	Alex Mestdagh		01 Review 20

Notes:

3/18/2024	4/11/2024	4/15/2024	DOUGLAS COUNTY ASSESSORS OFFICE 20	Marian Woodward	NO COMMENT	01 Review 20

Notes:

3/18/2024	4/4/2024	4/15/2024	DOUGLAS COUNTY ENGINEERING DIVISION 20	DC Referrals	NO COMMENT	01 Review 20

Notes:

3/18/2024	4/4/2024	4/15/2024	DOUGLAS COUNTY PLANNING SERVICES DIVISION 20	DC Referrals	NO COMMENT	01 Review 20
Notes:						
3/18/2024		4/15/2024	DOUGLAS COUNTY SCHOOL DISTRICT RE1 20	Shavon Caldwell		01 Review 20
Notes:						
3/18/2024		4/15/2024	DRAINAGE REPORT - CIVIL	Alex Mestdagh		01 Review 20
Notes:						
3/18/2024	3/21/2024	4/15/2024	ECONOMIC DEVELOPMENT 20	Weldy Feazell	NO COMMENT	01 Review 20
Notes:						
3/18/2024	3/19/2024	4/15/2024	FIRE LIFE SAFETY 20	Randy Capra	REVISIONS REQUIRED	See Notes
Notes: Some additional information is required as well as some "tweaking" to the north side of the building (UFL, fire hydrant and location, FDC location, signage, auto turn, etc. See response letter, address all comments and respond to the actual letter when resubmitting. Response is provided in both a pdf and word document (a word document so that the applicant can respond in the body of the document).						
3/18/2024	4/11/2024	4/15/2024	IREA 20	Brooks Kaufman	DENIED	01 Review 20
Notes: CORE will require the applicant to provide new transformer and EUSERC cabinet locations. The proposed tree plantings will not be allowed within 20 feet of CORE''s existing overhead powerline. The Town of Parker and CORE are working together to underground the existing overhead powerline in the future; CORE will require a 15-foot utility easement for the future project. The future project will require the proposed Trash Enclosure and Storage to be relocated. Last item correctly labels all existing easements.						
3/18/2024	3/21/2024	4/15/2024	PARKER AUTHORITY FOR REINVESTMENT 20	Weldy Feazell	NO COMMENT	01 Review 20
Notes:						
3/18/2024	4/17/2024	4/15/2024	PHOTOMETRIC PLAN 20	Ashley Chasez	REVISIONS REQUIRED	01 Review 20
Notes: See Planning Memo						
3/18/2024		4/15/2024	PLAT - CIVIL	Alex Mestdagh		01 Review 20
Notes:						

3/18/2024		4/15/2024	POLICE 20	Greg Epp		01 Review 20
Notes:						
3/18/2024	6/17/2024	4/15/2024	PSCO RESIDENTIAL SUBDIVISIONS 20	Xcel Energy		01 Review 20
Notes:						
3/18/2024	4/12/2024	4/15/2024	PUBLIC SERVICE COMPANY OF COLORADO 20	Donna George	REVISIONS REQUIRED	please see attached
Notes: please see attached						
3/18/2024		4/15/2024	SITE PLAN - CIVIL	Alex Mestdagh		01 Review 20
Notes:						
3/18/2024	4/17/2024	4/15/2024	SITE PLAN 20	Ashley Chasez	REVISIONS REQUIRED	01 Review 20
Notes: See Planning Memo						
3/18/2024		4/15/2024	SOUTH METRO FIRE 20	South Metro Fire		01 Review 20
Notes:						
3/18/2024	3/18/2024	4/15/2024	SUBDIVISION AGREEMENT 20	Ashley Chasez	NOT APPLICABLE	01 Review 20
Notes:						
3/18/2024		4/15/2024	TRAFFIC IMPACT STUDY - CIVIL	Alex Mestdagh		01 Review 20
Notes:						
3/18/2024		4/15/2024	URBAN DRAINAGE AND FLOOD CONTROL 20	UDFCD		01 Review 20
Notes:						
Review Group: SP 1ST 20 ADD						
3/18/2024	4/15/2024	4/15/2024	PARKER WATER AND SANITATION DISTRICT 20	Robert Ramsey	APPROVED	01 Review 20
Notes:						

Review Group: SP 2ND 15

3/17/2025	3/28/2025	4/7/2025	CONST PLANS - ENVIRONMENTAL 15	Robert Seacat	REVISIONS REQUIRED	See Engineering Memo and Comments

Notes:

SP24-012 – McDonalds Remodel, Parker Central - 2nd Environmental Review, 3-28-25

GENERAL COMMENTS (Initial and Interim Plan Sheets)

Please note that a CBMP Cost Estimate will be required and reviewed with the Grading Permit after all CBMP comments have been addressed and the final site plan is near approval.

1. Vehicle Tracking Control (VTC) may be required for the site if tracking becomes a problem. All dirt tracked off the site on to the adjacent private drives and parking areas must be swept up throughout the day and nightly, no exceptions. Please add a Callout to the Initial and Interim Erosion Control Plan Sheets stating – "VTC PAD (FODS or COMPARABLE) MAY BE REQUIRED IF TRACK OUT BECOMES A PROBLEM, ALL DIRT TRACKING MUST BE SWEPT UP IMMEDIATELY, NO EXCEPTIONS".
2. Please include within the plan set all 64 pages of the Town of Parker's COMPLETE List of Keys/Symbols (1st), General Notes (2nd), and Erosion Control Details in ALPHABETICAL Order (3rd), Immediately Following the Final Erosion Control Plan Sheet. Link to these plan sheets already drawn out below.

72-page layout of CBMP Legend, General Notes and Details
https://drive.google.com/file/d/1oE5TRyFktV-bdRygduwlqhwaf3eQJxzs/view?usp=drive_link

3/17/2025	4/1/2025	4/7/2025	CONSTRUCTION PLANS - CIVIL 15	Charles Kudlauskas	REVISIONS REQUIRED	See uploaded Memo and Redlines.

Notes:

3/17/2025	3/25/2025	4/7/2025	FIRE LIFE SAFETY 15	Randy Capra	REVISIONS REQUIRED	See Notes

Notes:

Partial modifications have been provided along with conflicting information and information that the applicant has not provided (as required). See response letter and address ALL information when responding for the third submittal. Including the required riser room floor plan.

3/17/2025	4/7/2025	4/7/2025	IREA 15	Brooks Kaufman	REVISIONS REQUIRED	

Notes:

The proposed transformer location does not meet CORE''s requirements and the towns requirements. The transformer may not open into a drive or parking spot. The proposed landscaping does not meet CORE''s clearance requirements for the transformer and EUSERC cabinet. Please refer to CORE''s handbook and additional information provided via attachments.
Last CORE will require an easement by separate document prior to Site Plan approval.

3/17/2025	4/1/2025	4/7/2025	SITE PLAN - CIVIL 15	Charles Kudlauskas	REVISIONS REQUIRED	See uploaded Memo.

Notes:

3/17/2025	4/8/2025	4/7/2025	SITE PLAN 15	Amber Wood Hicken	REVISIONS REQUIRED	

Notes:

See planning comments 02

3/17/2025	4/1/2025	4/7/2025	TRAFFIC IMPACT STUDY - CIVIL 15	Charles Kudlauskas	REVISIONS REQUIRED	See uploaded Memo.

Notes: