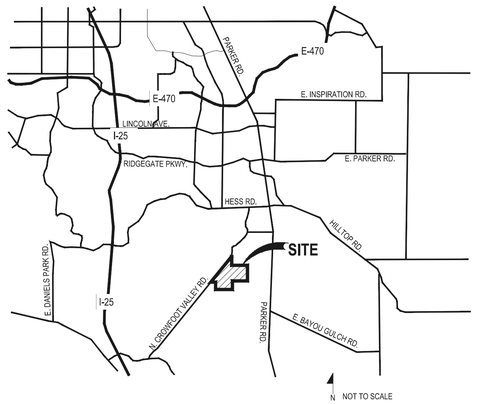
# TRAILS AT CROWFOOT

## FILING NO. 9 FINAL LANDSCAPE PLANS




KEY MAP

## VICINITY MAP




## OWNVER / DEVELOPER

E5X MANAGEMENT
7353 SOUTH ALTON WAY
CENTENNIAL, CO 80112

## PLANNER / LANDSCAPE ARCHITECT

people creating spaces

**pcs group inc.** www.pcsgroupco.com
#3, B-180 Independence plaza
1007 16th street . denver co 80265
t 303.531.4905 . f 303.531.4908

## CIVIL ENGINEER

CVL CONSULTANTS
10333 E. DRY CREEK RD. #240
ENGLEWOOD, CO 80112
720-482-9526

## SHEET INDEX

| Sheet Number | Sheet Title |
|---|---|
| L0.0 | LANDSCAPE COVER SHEET |
| L0.1 | LANDSCAPE NOTES & PLANT SCHEDULE |
| L1.1 | OVERALL LANDSCAPE PLAN |
| L1.2 | LANDSCAPE PLAN |
| L1.3 | LANDSCAPE PLAN |
| L1.4 | LANDSCAPE PLAN |
| L1.5 | LANDSCAPE PLAN |
| L1.6 | LANDSCAPE PLAN |
| L1.7 | LANDSCAPE PLAN |
| L1.8 | LANDSCAPE PLAN |
| L1.9 | LANDSCAPE PLAN |
| L1.10 | LANDSCAPE PLAN |
| L1.11 | LANDSCAPE PLAN |
| L1.12 | LANDSCAPE PLAN |
| L1.13 | LANDSCAPE PLAN |
| L1.14 | LANDSCAPE PLAN |
| L2.0 | SITE & LANDSCAPE DETAILS |
| IR1.0 | IRRIGATION LEGEND AND NOTES |
| IR1.1 | IRRIGATION WORKSHEETS |
| IR1.2-IR1.11 | IRRIGATION PLANS |
| IR2.1 | IRRIGATION DETAILS |
| IR2.2 | IRRIGATION DETAILS |

## SYMBOLS & ABBREVIATIONS

AC. = ACRE
APPROXIMATE = APPROX.
B&B = BALL AND BURLAP
BOC = BACK OF CURB
B.M. = BENCH MARK
BLDG. = BUILDING
B.S. = BOTTOM OF STAIR
B.W. = BOTTOM OF WALL
CAL. = CALIPER
C.B. = CATCH BASIN
CL CATCH BASIN CENTER LINE
C.O. = CLEANOUT
COL. = COLUMN
CONC. = CONCRETE
CONT. = CONTINUOUS
CONTR = CONTRACTOR
C.F. = CUBIC FEET
C.Y. = CUBIC YARD
DET. = DETAIL
DIM. = DIMENSION
DIA. = DIAMETER
DWG. = DRAWING
EA. = EACH
ELEV. = ELEVATION
EXIST. = EXISTING
E.P. = EDGE OF PAVING
EXP. = EXPANSION
E.W. = EACH WAY
F.F. = FINISH FLOOR
F.G. = FINISH GRADE
FIN. = FINISH
F.H. = FIRE HYDRANT
FL = FLOW LINE
FTG. = FOOTING
FT. = FEET
GA. = GAUGE
GALV. = GALVANIZED
H.W. = HEAD WALL
H.P. = HIGH POINT
HT. = HEIGHT
HORIZ. = HORIZON
I.D. = INNER DIAMETER
IN. = INCH
INV. = INVERT
L.P. = LOW POINT
L.F. = LINEAR FEET
MAX. = MAXIMUM
M.H. = MAN HOLE
MIN. = MINIMUM
MISC. = MISCELLANEOUS
N.I.C. = NOT IN CONTRACT
N.T.S. = NOT TO SCALE
O.C. = ON CENTER
O.D. = OUTSIDE DIAMETER
P.O.B. = POINT OF BEGINNING
P.O.C. = POINT OF CONNECTION
P.V.C. = POLYVINYL CHLORIDE PIPE
PL = PROPERTY LINE
R = RADIUS
R.C.P. = = REINFORCED CONCRETE PIPE
R.O.W. = RIGHT OF WAY
REQ'D. = REQUIRED
REINF. = REINFORCED
SHT. = SHEET
SPEC. = SPECIFICATIONS
SQ. = SQUARE
S.F. = SQUARE FEET
S.Y. = SQUARE YARD
S.S. = STAINLESS STEEL
T.C. = TOP OF CURB
T.S. = TOP OF STAIR
T.W. = TOP OF WALL
TYP. = TYPICAL
VERT. = VERTICAL
W/O = WITH OUT
W.W.M. = WOVEN WIRE MESH

NOTE IDENTIFICATION
1 — DEMOLITION NOTE
1 — CONSTRUCTION NOTE

ELEVATION IDENTIFICATION
5280.10 — SPOT ELEVATION
5280.10 — ELEVATION

DETAIL IDENTIFICATION
DETAIL NUMBER / DETAIL NAME / SHEET NUMBER

DETAIL SECTION IDENTIFICATION
DETAIL NUMBER / SHEET NUMBER
SECTION DESIGNATION

## GENERAL NOTES

1. DRAWINGS ARE INTENDED TO BE PRINTED ON 24 X 36 PAPER. PRINTING THESE DRAWINGS AT A DIFFERENT SIZE WILL IMPACT THE SCALE. VERIFY THE GRAPHIC SCALE BEFORE REFERENCING ANY MEASUREMENTS ON THESE SHEETS. THE RECIPIENT OF THESE DRAWINGS SHALL BE RESPONSIBLE FOR ANY ERRORS RESULTING FROM INCORRECT PRINTING, COPYING, OR ANY OTHER CHANGES THAT ALTER THE SCALE OF THE DRAWINGS.
2. VERIFY ALL PLAN DIMENSIONS PRIOR TO START OF CONSTRUCTION. NOTIFY THE OWNER'S REPRESENTATIVE TO ADDRESS ANY QUESTIONS OR CLARIFY ANY DISCREPANCIES.
3. WRITTEN DIMENSIONS TAKE PRECEDENCE OVER SCALED DIMENSIONS.
4. SUBMIT A CHANGE ORDER FOR APPROVAL FOR ANY CHANGES TO WORK SCOPE RESULTING FROM FIELD CONDITIONS OR DIRECTION BY OWNER'S REPRESENTATIVE WHICH REQUIRE ADDITIONAL COST TO THE OWNER PRIOR TO PERFORMANCE OF WORK.
5. THE CONTRACTOR SHALL PROVIDE A STAKED LAYOUT OF ALL SITE IMPROVEMENTS FOR INSPECTION BY THE OWNER'S REPRESENTATIVE AND MAKE MODIFICATIONS AS REQUIRED. ALL LAYOUT INFORMATION IS AVAILABLE IN DIGITAL FORMAT FOR USE BY THE CONTRACTOR.
6. IF A GEOTECHNICAL SOILS REPORT IS NOT AVAILABLE AT THE TIME OF CONSTRUCTION, PCS GROUP, INC. RECOMMENDS A REPORT BE AUTHORIZED BY THE OWNER AND THAT ALL RECOMMENDATIONS OF THE REPORT ARE FOLLOWED DURING CONSTRUCTION.
7. THE CONTRACTOR SHALL USE THESE CONTRACT DOCUMENTS AS A BASIS FOR THE BID. IF THE OWNER ELECTS TO PROVIDE A GEOTECHNICAL REPORT, THE CONTRACTOR SHALL REVIEW THE REPORT AND SUBMIT AN APPROPRIATE CHANGE ORDER TO THE OWNER'S REPRESENTATIVE IF ADDITIONAL COSTS ARE REQUESTED.
8. CONTRACTOR SHALL CONFIRM THAT SITE CONDITIONS ARE SIMILAR TO THE PLANS,WITHIN TOLERANCES STATED IN THE CONTRACT DOCUMENTS, AND SATISFACTORY TO THE CONTRACTOR PRIOR TO START OF WORK. SHOULD SITE CONDITIONS BE DIFFERENT THAN REPRESENTED ON THE PLANS OR UNSATISFACTORY TO THE CONTRACTOR, THE CONTRACTOR SHALL CONTACT THE OWNER'S REPRESENTATIVE FOR CLARIFICATION AND FURTHER DIRECTION.
9. CONTRACTOR IS RESPONSIBLE TO PAY FOR, AND OBTAIN, ANY REQUIRED APPLICATIONS, PERMITTING, LICENSES, INSPECTIONS AND METERS ASSOCIATED WITH WORK.
10. THE CONTRACTOR SHALL BE RESPONSIBLE FOR ANY FINES OR PENALTIES ASSESSED TO THE OWNER RELATING TO ANY VIOLATIONS OR NON-CONFORMANCE WITH THE PLANS, SPECIFICATIONS,CONTRACT DOCUMENTS,JURISDICTIONAL CODES,AND REGULATORY AGENCIES.
11. THE CONTRACTOR SHALL BE RESPONSIBLE FOR COORDINATION OF ALL UTILITY LOCATES PRIOR TO ANY EXCAVATION. NOTIFY OWNER'S REPRESENTATIVE IF EXISTING OR PROPOSED UTILITIES INTERFERE WITH THE ABILITY TO PERFORM WORK.
12. UNLESS IDENTIFIED ON THE PLANS FOR DEMOLITION OR REMOVAL, THE CONTRACTOR IS RESPONSIBLE FOR THE COST TO REPAIR UTILITIES, ADJACENT OR EXISTING LANDSCAPE, ADJACENT OR EXISTING PAVING, OR ANY PUBLIC AND PRIVATE PROPERTY THAT IS DAMAGED BY THE CONTRACTOR OR THEIR SUBCONTRACTOR'S OPERATIONS DURING INSTALLATION, ESTABLISHMENT OR DURING THE SPECIFIED MAINTENANCE PERIOD. ALL DAMAGES SHALL BE REPAIRED TO PRE-CONSTRUCTION CONDITIONS AS DETERMINED BY THE OWNER'S REPRESENTATIVE. CONTRACTOR SHALL BE RESPONSIBLE FOR LOGGING ANY DAMAGES PRIOR TO START OF CONSTRUCTION AND DURING THE CONTRACT PERIOD.
13. ANY AREAS OR IMPROVEMENTS DISTURBED OUTSIDE WORK AREA LIMIT SHALL BE RETURNED TO THEIR ORIGINAL CONDITION AT THE CONTRACTOR'S EXPENSE. IN THE EVENT THE CONTRACTOR REQUIRES A MODIFICATION TO THE CONSTRUCTION LIMIT, WRITTEN PERMISSION MUST BE OBTAINED FROM THE OWNER'S REPRESENTATIVE PRIOR TO ANY DISTURBANCE OUTSIDE OF THE LIMIT OF WORK.
14. THE CONTRACTOR SHALL BE RESPONSIBLE FOR THE REPAIR OF ANY OF THEIR TRENCHES OR EXCAVATIONS THAT SETTLE.
15. THE CONTRACTOR SHALL BE RESPONSIBLE TO PREPARE AND SUBMIT A TRAFFIC CONTROL PLAN TO THE APPROPRIATE JURISDICTIONAL AGENCIES AND THE OWNER'S REPRESENTATIVE IF THEIR WORK AND OPERATIONS AFFECT OR IMPACT THE PUBLIC RIGHTS-OF-WAY. OBTAIN APPROVAL PRIOR TO ANY WORK WHICH AFFECTS OR IMPACTS THE PUBLIC RIGHTS-OF-WAY. THE CONTRACTOR SHALL BE RESPONSIBLE FOR ANY FINES OR PENALTIES ASSESSED TO THE OWNER RELATING TO THIS REQUIREMENT DURING THE CONTRACT PERIOD.
16. SIGHT TRIANGLES AND SIGHT LINES SHALL REMAIN UNOBSTRUCTED BY EQUIPMENT, CONSTRUCTION MATERIALS, PLANT MATERIAL OR ANY OTHER VISUAL OBSTACLE DURING THE CONTRACT PERIOD AND AT MATURITY OF PLANTS PER LOCAL JURISDICTIONAL REQUIREMENTS. NO PLANT MATERIAL OTHER THAN GROUND COVER IS ALLOWED TO BE PLANTED ADJACENT TO FIRE HYDRANTS AS STIPULATED BY JURISDICTIONAL REQUIREMENTS.
17. COORDINATE SITE ACCESS, STAGING, STORAGE AND CLEAN OUT AREAS WITH OWNER'S REPRESENTATIVE.
18. CONTRACTOR IS RESPONSIBLE FOR PROVIDING TEMPORARY SAFETY FENCING AND BARRIERS AROUND ALL IMPROVEMENTS SUCH AS WALLS, PLAY STRUCTURES, EXCAVATIONS, ETC. ASSOCIATED WITH THEIR WORK UNTIL SUCH FACILITIES ARE COMPLETELY INSTALLED PER THE PLANS, SPECIFICATIONS AND MANUFACTURER'S RECOMMENDATIONS.
19. CONTRACTOR SHALL BE RESPONSIBLE FOR PROTECTION OF THEIR MATERIAL STOCKPILES CONCRETE IN THE STORM SEWER IS PROHIBITED.
20. THE CONTRACTOR SHALL KNOW, UNDERSTAND AND ABIDE BY ANY STORM WATER POLLUTION PREVENTION PLAN (SWPPP) ASSOCIATED WITH THE SITE. IF A STORM WATER POLLUTION PREVENTION PLAN IS NOT PROVIDED BY THE OWNER'S REPRESENTATIVE, REQUEST A COPY BEFORE PERFORMANCE OF ANY SITE WORK.
21. CONTRACTOR SHALL MAINTAIN ANY STORM WATER MANAGEMENT FACILITIES THAT EXIST ON SITE FOR FULL FUNCTIONALITY. THE CONTRACTOR SHALL INSTALL AND MAINTAIN ANY NEW STORM WATER MANAGEMENT FACILITIES THAT ARE IDENTIFIED IN THE SCOPE OF WORK TO FULL FUNCTIONALITY,THE CONTRACTOR SHALL BE RESPONSIBLE FOR ANY FINES OR PENALTIES ASSESSED TO THE OWNER FOR FAILURE TO MAINTAIN STORM WATER MANAGEMENT FACILITIES DURING THE CONTRACT PERIOD.
22. THE CONTRACTOR SHALL PREVENT SEDIMENT, DEBRIS AND ALL OTHER POLLUTANTS FROM EXITING THE SITE OR ENTERING THE STORM SEWER SYSTEM DURING ALL DEMOLITION OR CONSTRUCTION OPERATIONS THAT ARE PART OF THIS PROJECT. THE CONTRACTOR SHALL BE RESPONSIBLE FOR ANY FINES OR PENALTIES ASSESSED TO THE OWNER RELATING TO THESE REQUIREMENTS DURING THEIR CONTRACTED COURSE OF WORK.
23. THE CONTRACTOR SHALL BE RESPONSIBLE TO PREVENT ANY IMPACTS TO ADJACENT WATERWAYS, WETLANDS, OR OTHER ENVIRONMENTALLY SENSITIVE AREAS RESULTING FROM WORK DONE AS PART OF THIS PROJECT. THE CONTRACTOR SHALL BE RESPONSIBLE FOR ANY FINES OR PENALTIES ASSESSED TO THE OWNER RELATING TO THESE STANDARDS DURING THEIR CONTRACTED COURSE OF WORK.
24. THE CONTRACTOR AND OR THEIR AUTHORIZED AGENTS SHALL INSURE THAT ALL LOADS OF CONSTRUCTION MATERIAL IMPORTED TO OR EXPORTED FROM THE PROJECT SITE SHALL BE PROPERLY COVERED TO PREVENT LOSS OF MATERIAL DURING TRANSPORT. TRANSPORTATION METHODS ON PUBLIC RIGHT-OF-WAYS SHALL CONFORM TO JURISDICTIONAL REQUIREMENTS. THE CONTRACTOR SHALL BE RESPONSIBLE FOR ANY FINES OR PENALTIES ASSESSED TO THE OWNER RELATING TO THESE REQUIREMENTS.
25. THE CLEANING OF EQUIPMENT IS PROHIBITED AT THE JOB SITE UNLESS AUTHORIZED BY THE OWNER'S REPRESENTATIVE IN A DESIGNATED AREA.THE DISCHARGE OF WATER, WASTE CONCRETE, POLLUTANTS, OR OTHER MATERIALS SHALL ONLY OCCUR IN AREAS DESIGNED FOR SUCH USE AND APPROVED BY THE OWNER'S REPRESENTATIVE.

■ Prepared For■

E5X MANAGEMENT
7353 SOUTH ALTON WAY
CENTENNIAL, CO 80112

■ Land Planning ■

people creating spaces

**pcs group inc.** www.pcsgroupco.com
#3, B-180 Independence plaza
1007 16th street . denver co 80265
t 303.531.4905 . f 303.531.4908

■ Engineering ■

CVL CONSULTANTS
10333 E. DRY CREEK RD. #240
ENGLEWOOD, CO 80112
720-482-9526

TRAILS AT CROWFOOT
FILING NO. 9
PARKER, COLORADO
LANDSCAPE PLANS

| | |
|---|---|
| Drawn by: | JWI, BEM, GG |
| Checked by: | PCS STAFF |
| Submittal Date: | 12.08.2017 |
| | 01.26.2017 |
| Know what's **below.** **Call** before you dig. | 02.20.2018 |
| 811 | 04.6.2018 |
| | 08,10.2018 |

■ Sheet Name ■
LANDSCAPE COVER SHEET

■ Sheet Number ■
L0.0

Y:\VESS RANCH\LANDSCAPE ARCHITECTURE\CURRENT DWGS\VESS-LDSCP PLANS - FILING 9.DWG
Thursday, May 18, 2017

# LANDSCAPE NOTES

SITE PREP

1. LANDSCAPE CONTRACTOR TO REFERENCE CIVIL ENGINEERING DRAWINGS REGARDING DRAINAGE AND EROSION CONTROL NOTES, DETAILS AND PROCEDURES.
2. ALL WORK SHALL CONFORM TO LOCAL MUNICIPAL CODES. ALL WORK SHALL BE IN ACCORDANCE WITH OSHA CODES AND STANDARDS. NOTHING INDICATED ON THE LANDSCAPE DRAWINGS SHALL RELIEVE THE CONTRACTOR FROM COMPLYING WITH ANY APPROPRIATE SAFETY REGULATIONS.
7. ALL UTILITY EASEMENTS SHALL REMAIN UNOBSTRUCTED AND FULLY ACCESSIBLE ALONG THEIR ENTIRE LENGTH FOR USE OF MAINTENANCE EQUIPMENT ENTRY.
8. SEE CIVIL ENGINEER'S DRAWINGS FOR GRADING AND DRAINAGE, EROSION CONTROL, PAVING AND SLEEVES, UTILITIES, AND OTHER ENGINEERED DETAILS.
9. CONTRACTOR SHALL ENSURE POSITIVE DRAINAGE AWAY FROM ALL STRUCTURES.
10. A PRE-CONSTRCUTION MEETING MAY BE REQUIRED BETWEEN THE LANDSCAPE CONTRACTOR, PROPERTY OWNER AND LANDSCAPE ARCHITECT BEFORE START OF CONSTRUCTION.
11. CONTRACTOR SHALL MINIMIZE ALL DISTURBANCE TO NON-IMPACTED AREAS.
12. SITE MUST BE CLEAN AND FREE OF ALL CONSTRUCTION DEBRIS BEFORE FINAL ACCEPTANCE.
13. CONTRACTOR IS RESPONSIBLE FOR SETUP OF BARRICADES, WARNING SIGNAGE, OR OTHER PROTECTIVE DEVICES IF ANY EXCAVATIONS ARE LEFT EXPOSED AFTER ON-SITE WORK HOURS.
14. IT IS THE CONTRACTOR'S RESPONSIBILITY TO ACQUIRE ALL NECESSARY PERMITS FOR CONSTRUCTION WORK WITHIN THE LOCAL JURISDICTION. A SEPARATE LANDSCAPE CONSTRUCTION PERMIT IS REQUIRED AND USE AND SALES TAX WILL BE COLLECTED. WATER CONNECTION FEES ARE TO BE PAID PRIOR TO THE METER SETTING. A BACK FLOW PERMIT AND INSPECTION IS REQUIRED PRIOR TO THE METER BEING INSTALLED IN THE VAULT.
15. TOPSOIL IS TO BE STRIPPED & STOCKPILED ON-SITE FOR LATER USE.
16. CONTRACTOR IS RESPONSIBLE FOR REPLACEMENT OF ANY EXISTING OR NEW SITE IMPROVEMENTS DISTURBED OR DAMAGED DUE TO THEIR OPERATIONS. DAMAGED MATERIALS SHALL BE REPLACED/REPAIRED TO ITS PRIOR CONDITION.
17. LOCATE ALL UTILITIES PRIOR TO ANY DIGGING OR LANDSCAPE PLANTING. CONTRACTOR SHALL HAND DIG ALL PLANTING PITS ADJACENT TO UTILITIES. IF UTILITIES ARE DAMAGED, REPAIRS SHALL BE MADE AT THE CONTRACTOR'S EXPENSE.
18. PRIOR TO INSTALLATION OF PLANT MATERIALS, AREAS THAT HAVE BEEN COMPACTED OR DISTURBED BY CONSTRUCTION ACTIVITY SHALL BE THOROUGHLY LOOSENED & AMENDED.
19. ALL LANDSCAPE AREAS SHALL RECEIVE SOIL AMENDMENT ROTOTILLED AT A MIN. 8" DEPTH AT A RATE OF 4 CUBIC YARDS PER 1,000 SF.
20. CONTRACTOR SHALL SUBMIT SOIL AMENDMENT SPECIFICATIONS FOR APPROVAL PRIOR TO INSTALLATION.
21. THE LANDSCAPE CONTRACTOR SHALL BE RESPONSIBLE FOR ENSURING POSITIVE DRAINAGE EXISTS IN ALL LANDSCAPE AREAS. SURFACE DRAINAGE ON LANDSCAPE AREAS SHALL NOT FLOW TOWARD STRUCTURES AND FOUNDATIONS. MAINTAIN SLOPE AWAY FROM FOUNDATIONS PER THE GEOTECH REPORT RECOMMENDATIONS. ALL LANDSCAPE AREAS BETWEEN WALKS AND CURBS SHALL DRAIN FREELY TO THE CURB UNLESS OTHERWISE IDENTIFIED ON THE GRADING PLAN. IN NO CASE SHALL THE GRADE, TURF THATCH, OR OTHER LANDSCAPE MATERIALS DAM WATER AGAINST WALKS. MINIMUM SLOPES ON LANDSCAPE AREAS SHALL BE 2%, MAXIMUM SLOPE SHALL BE 25% UNLESS SPECIFICALLY IDENTIFIED ON THE PLANS OR APPROVED BY LANDSCAPE ARCHITECT.

TURF, PLANT & GROUNDCOVER MATERIAL

22. ANY SUBSTITUTION OR ALTERATION OF PLANT OR LANDSCAPE MATERIALS IN LOCATION, SPECIES, TYPE, ETC. SHALL BE ALLOWED ONLY WITH APPROVAL OF THE LANDSCAPE ARCHITECT. OVERALL PLANT QUANTITY AND QUALITY TO BE CONSISTENT WITH APPROVED PLANS.
23. ALL PLANT MATERIALS SHALL BE IN ACCORDANCE WITH AAN SPECIFICATIONS FOR NUMBER ONE GRADE.
24. PROPOSED TREE LOCATIONS SHALL HAVE A MINIMUM SEPARATION OF 4' BETWEEN WATER OR SEWER SERVICE LINES AND A MINIMUM SEPARATION OF 10' BETWEEN WATER OR SEWER MAIN LINES. PROPOSED TREE LOCATIONS SHALL HAVE A MINIMUM SEPARATION OF 4' BETWEEN GAS LINES.
25. ALL PROPOSED IRRIGATED TURF AREAS SHALL BE SODDED WITH THE BLEND SPECIFIED IN THESE PLANS. SOD SHALL BE LAID ON A FIRM BED WITH TIGHT JOINTS AND WITHOUT VOIDS.
26. TREE WRAP TO BE APPLIED IN LATE FALL AFTER INSTALLATION, AND REMOVED THE FOLLOWING SPRING. REMOVE ANY STRING OR WIRE AROUND TREE TRUNKS AT TIME OF INSTALLATION.
27. CONTRACTOR SHALL REPORT ANY DISCREPANCY FOUND IN THE FIELD VERSUS THE LANDSCAPE DRAWINGS IMMEDIATELY TO THE LANDSCAPE ARCHITECT, OWNER'S REPRESENTATIVE, AND/OR THE CITY/COUNTY PRIOR TO ANY CONSTRUCTION OR DEMOLITION ACTIVITY. FAILURE TO MAKE SUCH CONFLICTS KNOWN WILL RESULT IN THE CONTRACTOR'S LIABILITY TO RELOCATE AND REPAIR.
28. MAINTAIN A MINIMUM THREE FOOT CLEARANCE AROUND FIRE HYDRANTS, FIRE DEPARTMENT CONNECTIONS OR OTHER FIRE SERVICE EQUIPMENT. NO TREES OR SHRUBS WILL BE ALLOWED WITHIN THIS AREA.
29. TREES SHALL NOT BE LOCATED IN DRAINAGE SWALES, AREAS OR UTILITY EASEMENTS. CONTACT LANDSCAPE ARCHITECT FOR RELOCATION OF PLANTS IN QUESTIONABLE AREAS PRIOR TO INSTALLATION.
30. THE CENTER OF EVERGREEN TRESS SHALL NOT BE PLACED CLOSER THAN 8' AND THE CENTER OF ORNAMENTAL TRESS CLOSER THAN 6' FROM A SIDEWALK, STREET OR DRIVE LANE. EVERGREEN TREES SHALL NOT BE LOCATED ANY CLOSER THAN 15' FROM IRRIGATION ROTOR HEADS. NOTIFY LANDSCAPE ARCHITECT IF TREE LOCATIONS CONFLICT WITH THESE STANDARDS FOR FURTHER DIRECTION.
31. ALL EVERGREEN TREES SHALL BE FULLY BRANCHED TO THE GROUND AND SHALL NOT EXHIBIT SIGNS OF ACCELERATED GROWTH AS DETERMINED BY LANDSCAPE ARCHITECT.
32. NO PLANT MATERIAL SHALL BE PLANTED WITHIN 10' OF ANY EXISTING OR PROPOSED ELECTRICAL SWITCHGEARS, TRANSFORMERS OR OTHER ELECTRICAL UTILITY EQUIPMENT. PLANT MATERIAL MAY BE FIELD ADJUSTED TO PROVIDE THE 10' CLEAR SPACE AND ACCESSIBILITY REQUIRED BY THE UTILITY'S OWNER/OPERATOR.
33. ANY TREES INSTALLED ABOVE RETAINING WALLS UTILIZING GEO-GRID MUST BE DUG TO PROTECT GEO-GRID. IF GEO-GRID MUST BE CUT TO INSTALL TREES, APPROVAL MUST BE GIVEN BY LANDSCAPE ARCHITECT PRIOR TO DOING WORK.
34. PROPOSED PLANT SPECIES MAY BE SUBJECT TO CHANGE PENDING COMMERCIAL AVAILABILITY AT TIME OF CONSTRUCTION. ALL SPECIES SUBSTITUTIONS SHALL BE APPROVED BY THE LANDSCAPE ARCHITECT PRIOR TO INSTALLATION. OVERALL PLANT QUANTITIES & SIZES SHALL REMAIN AS INDICATED ON THE PLANT SCHEDULE. CONTRACTOR SHALL VERIFY THAT ANY SUBSTITUTED PLANT SPECIES ARE ACCEPTABLE TO THE LOCAL MUNICIPALITY OR GOVERNING JURISDICTIONS.
35. IF SPECIFIED PLANTS ARE NOT COMMERCIALLY AVAILABLE AT TIME OF CONSTRUCTION/INSTALLATION, CONTRACTOR SHALL COORDINATE WITH LANDSCAPE ARCHITECT FOR A SUBSTITUTION.

PLANTING BEDS

36. ALL PROPOSED PLANTING BEDS SHALL CONTAIN THE SPECIFIED MULCH. ROCK MULCH BEDS SHALL INCLUDE MIRAFI WEED BARRIER FABRIC OR EQUAL SECURED WITH PINS. OVERLAP FABRIC MIN. 24" AT EDGES. NO FABRIC IS REQUIRED IN WOOD MULCH AREAS.
37. ALL MUCH TO BE 4" DEPTH
38. WOOD MULCH SHALL BE 'GORILLA HAIR' OR EQUAL SHREDDED CEDAR MULCH, 4" DEPTH.
39. NO EDGING IS REQUIRED AGAINST HARDSCAPE/WALK AREAS OR AT TREE RING EDGES. EDGING SHALL BE INSTALLED TO AVOID IMPEDING DRAINAGE. RE: DETAILS FOR INSTALLATION IN LOW DRAINAGE AREAS.
40. FOR TREES NOT IN PLANTING BEDS, ALLOW A 6'-0" DIAMETER BED (TREE RING) WITHOUT SOD AROUND ROOT COLLAR. APPLY SPECIFIED WOOD MULCH & DEPTH AROUND COLLAR FOLLOWING SOD INSTALLATION. NO FABRIC OR STEEL EDGER IS NECESSARY WITHIN TREE RINGS IN NATIVE AREAS. TREES IN PLANTING BEDS SHALL NOT HAVE WEED BARRIER INSTALLED WITHIN 6' OF THEIR TRUNKS.

HARDSCAPE

41. REFER TO SITE PLANS & DETAILS FOR SPECIALTY CONCRETE LOCATIONS WHERE APPLICABLE.

IRRIGATION

42. 1)PERMANENT UNDERGROUND IRRIGATION IS REQUIRED IN ALL LANDSCAPE AREAS, 2) TURF AREAS ARE ZONED SEPARATELY FROM BED AREAS, 3) CONTROLLER TO INCLUDE RAIN SHUT-OFF, 4) HYDROZONES WILL BE ON SEPARATE IRRIGATION ZONES ACCORDING TO WATER-DEMAND.
43. REFER TO IRRIGATION PLANS FOR LIMIT AND TYPES OF IRRIGATION DESIGNED FOR THE LANDSCAPE. IN NO CASE SHALL IRRIGATION BE EMITTED WITHIN THE MINIMUM STANDARDS FROM BUILDING OR WALL FOUNDATIONS AS STIPULATED IN THE GEOTECHNICAL REPORT. ALL IRRIGATIONS DISTRIBUTION LINES, HEADS AND EMITTERS SHALL BE KEPT OUTSIDE THE MINIMUM DISTANCE AWAY FROM ALL BUILDING AND WALL FOUNDATIONS AS STIPULATED IN THE GEOTECH REPORT.
44. TURF & IRRIGATED NATIVE AREAS (WHERE APPLICABLE) SHALL BE IRRIGATED BY AUTOMATIC POP-UP SPRAY SYSTEM. SHRUBS & PLANTING BEDS SHALL BE IRRIGATED WITH DRIP/BUBBLER SYSTEM.
45. ALL TREES & SHRUBS OUTSIDE OF BEDS WITHIN NATIVE AREAS SHALL BE DRIP IRRIGATED. ALL IRRIGATION SHALL BE AN AUTOMATIC UNDERGROUND SYSTEM
46. REFER TO IRRIGATION PLANS FOR DETAILED INFORMATION.

MAINTENANCE

47. CONTRACTOR IS TO MAINTAIN ALL PLANTINGS AND ASSOCIATED IRRIGATION SYSTEM INSTALLED UNDER THIS CONTRACT UNTIL FINAL ACCEPTANCE BY THE TOWN AND TURNOVER TO OWNER. THIS MAINTENANCE SHALL INCLUDE PROPER WATERING OF ALL PLANTS, AND MOWING OF TURF/SEED AREAS IF NECESSARY.
48. SITE MUST BE CLEAN AND FREE OF ALL CONSTRUCTION DEBRIS BEFORE FINAL ACCEPTANCE.
49. ALL PLANT MATERIAL WILL BE COVERED BY A WARRANTY PERIOD. THE CONTRACTOR SHALL REPLACE DEAD, UNHEALTHY, OR OTHERWISE UNSATISFACTORY MATERIAL THROUGHOUT THIS PERIOD. THE WARRANTY SHALL BEGIN UPON FINAL ACCEPTANCE OF THE JOB.
50. LANDSCAPING SHALL BE PLANTED AND MAINTAINED IN A LIVING CONDITION BY THE OWNER OR ASSIGNS OR OWNERS ASSOCIATION. TREES AND SHRUBS MUST HAVE A 100% ONGOING SURVIVAL RATE. ANY DEAD OR DAMAGED PLANT MATERIAL (AS DETERMINED BY THE LOCAL MUNICIPALITY) SHALL BE REPLACED. NON-LIVING GROUND COVERS, SUCH AS ROCK OR MULCH, MUST BE 100% INTACT AFTER ONE YEAR AND 100% INTACT THEREAFTER.
51. LANDSCAPE AREAS WITHIN THE PROPERTY AND WITHIN THE ADJACENT RIGHT OF WAY SHALL BE MAINTAINED BY THE PROPERTY OWNER.

# FINE GRADING NOTES

1. SLOPES NOT TO EXCEED 4:1 MAX. - 1% MIN.
2. SATISFACTORY SOILS: ASTM D 2487 SOIL CLASSIFICATION GROUPS GW, GP, GM, SW, SP, AND SM, OR A COMBINATION OF THESE GROUP SYMBOLS; FREE OF ROCK OR GRAVEL LARGER THAN 3 INCHES (75 MM) IN ANY DIMENSION, DEBRIS, WASTE, FROZEN MATERIALS, VEGETATION, AND OTHER DELETERIOUS MATTER.
3. STRIP TOPSOIL TO WHATEVER DEPTHS ARE ENCOUNTERED IN A MANNER TO PREVENT INTERMINGLING WITH UNDERLYING SUBSOIL OR OTHER WASTE MATERIALS.
4. STRIP EXISTING SURFACES OF UNSUITABLE TOPSOIL, INCLUDING TRASH, DEBRIS, WEEDS, ROOTS, AND OTHER WASTE MATERIALS.
5. STOCKPILE TOPSOIL MATERIALS ON-SITE WITHOUT INTERMIXING WITH SUBSOIL.
6. REMOVE EXISTING VEGETATION, DEBRIS, UNSATISFACTORY SOIL MATERIALS, OBSTRUCTIONS, AND DELETERIOUS MATERIALS FROM GROUND SURFACE BEFORE PLACING FILLS.
7. PLOW, SCARIFY, BENCH, OR BREAK UP SLOPED SURFACES STEEPER THAN 1 VERTICAL TO 4 HORIZONTAL SO FILL MATERIAL WILL BOND WITH EXISTING MATERIAL.
8. PLACE AND COMPACT FILL MATERIAL IN LAYERS TO REQUIRED CROSS-SECTIONS, ELEVATIONS AND GRADES WITH SATISFACTORY SOIL MATERIAL.
9. UNIFORMLY GRADE AREAS TO A SMOOTH SURFACE, FREE FROM IRREGULAR SURFACE CHANGES. COMPLY WITH COMPACTION REQUIREMENTS AND GRADE TO CROSS SECTIONS, LINES, AND ELEVATIONS INDICATED.
10. PROVIDE A SMOOTH TRANSITION BETWEEN ADJACENT EXISTING GRADES AND NEW GRADES.
11. CUT OUT SOFT SPOTS, FILL LOW SPOTS AND TRIM HIGH SPOTS TO COMPLY WITH REQUIRED SURFACE TOLERANCES.
12. 12. SITE GRADING: SLOPE GRADES TO DIRECT WATER AWAY FROM ADJACENT STRUCTURES AND TO PREVENT PONDING. FINISH SUBGRADES TO REQUIRED ELEVATIONS WITHIN THE FOLLOWING TOLERANCES:
    A. AT LOCATIONS DESIGNATED FOR LAWN OR UNPAVED AREAS: PLUS OR MINUS 1 INCH (25 MM).
    B. AT DESIGNATED PAVEMENT LOCATIONS: PLUS OR MINUS 1/2 INCH (13 MM).
13. GRADING ON SLOPES: INSTALL EROSION STABILIZATION FABRIC PER MANUFACTURERS RECOMMENDATIONS ON SLOPED SURFACES EQUAL TO OR GREATER THAN A RATIO OF 1) VERTICAL FOOT TO 3) HORIZONTAL FEET.
14. CONTRACTOR WILL ENGAGE A QUALIFIED INDEPENDENT GEOTECHNICAL ENGINEERING TESTING AGENCY TO PERFORM FIELD QUALITY-CONTROL TESTING.
15. PROTECT NEWLY GRADED AREAS FROM TRAFFIC, FREEZING, AND EROSION. KEEP FREE OF TRASH AND DEBRIS.
16. REPAIR AND REESTABLISH GRADES TO SPECIFIED TOLERANCES WHERE DEVELOPED OR PARTIALLY DEVELOPED SURFACES BECOME ERODED, RUTTED, SETTLED, OR WHERE THEY LOSE COMPACTION DUE TO SUBSEQUENT CONSTRUCTION OPERATIONS OR WEATHER CONDITIONS.
17. WHERE SETTLING OCCURS BEFORE PROJECT CORRECTION PERIOD ELAPSES, REMOVE FINISHED SURFACE GRADING, BACKFILL WITH ADDITIONAL SOIL MATERIAL, COMPACT, AND RECONSTRUCT SURFACE GRADING.
18. TRANSPORT SURPLUS SATISFACTORY SOIL TO DESIGNATED STORAGE AREAS ON OWNER'S PROPERTY. STOCKPILE OR SPREAD SOIL AS DIRECTED BY OWNER.

# SEEDING ESTABLISHMENT NOTES:

1) SEED SHALL BE LABELED IN ACCORDANCE WITH THE U.S. DEPARTMENT OF AGRICULTURE, RULES AND REGULATIONS AND FEDERAL SEED ACT. SEED SHALL BE EQUAL IN QUALITY TO THE STANDARDS FOR "CERTIFIED SEED" AND SHALL BE FURNISHED IN SEALED, UNOPENED, STANDARD CONTAINERS. SEED SHALL BE FRESH, CLEAN, PURE LIVE SEED WITH THE VARIETIES MIXED IN PROPORTIONS BY WEIGHT SHOWN AND MEETING THE MINIMUM PERCENTAGES OF PURITY AND GERMINATION SPECIFIED.

2) SEED SHALL BE APPLIED AT A RATE SHOWN BY MIX. SEED SHALL PASS GOVERNMENT TEST OF GERMINATION OF EIGHTY PERCENT (80%) AND FOR PURITY OF NINETY PERCENT (90%). THE PURE LIVE SEED SHALL NOT BE LESS THAN SIXTY SEVEN ON ONE-HALF PERCENT (67.5%) FOR ANY ONE VARIETY, WITH THE AVERAGE OF THE MIXTURE, NO LESS THAN SEVENTY TWO PERCENT (72%). ALL SEED SHALL BE FREE OF POA ANNUA AND ALL NOXIOUS OBJECTIONABLE WEEDS WITH A MAXIMUM CROP OF ONE-TENTH PERCENT (0.1%) AND MAXIMUM WEED OF ONE TENTH PERCENT (0.1%). IF SEED AVAILABLE ON THE MARKET DOES NOT MEET THE MINIMUM PURITY AND GERMINATION PERCENTAGES SPECIFIED, THE CONTRACTOR MUST COMPENSATE BY FURNISHING SUFFICIENT ADDITIONAL SEED TO EQUAL THE SPECIFIED PRODUCT.

3) SPREAD ORGANIC SOIL AMENDMENT MATERIALS, AT A RATE OF 3 C.Y. PER 1000 SQUARE FEET, EVENLY OVER ENTIRE DISTURBED AREA AND THOROUGHLY INCORPORATE, BY MIXING, ROTOTILLING OR FINELY DISKING (MAX. 1" SIZE), TO A DEPTH OF SIX INCHES. ALL STONES, STICKS AND DEBRIS BROUGHT TO THE SURFACE SHALL BE REMOVED FROM THE SITE PROPERLY DISPOSED OF BY THE CONTRACTOR, AT NO ADDITIONAL COST TO THE OWNER. ALL SEED AREAS WILL THEN BE RAKED AND ROLLED TO THE DESIRED FINISHED GRADES WITH GENTLY SLOPING SURFACES TO ADEQUATELY DRAIN ALL SURFACE WATER RUNOFF. THE FINISHED SURFACE SHALL BE EVEN AND UNIFORM AND NO DIRT CLODS LARGER THAN ONE INCH (1") IN DIAMETER SHALL APPEAR ON THE SURFACE. THE SOIL SURFACE SHALL BE SMOOTH, LOOSE AND OF FINE TEXTURE, AND BE FLUSH WITH ALL PAVING EDGES.

4) CONTRACTOR SHALL USE APPROPRIATE MECHANICAL POWER (BRILLION SEEDER OR EQUAL) TO DRILL THE SEED INTO THE SEEDBED WHEREVER POSSIBLE. SEED SHALL BE SOWN TO A DEPTH OF ONE-HALF INCH (½"). DRILLING SHALL BE DONE IN 2 SEPARATE APPLICATIONS CROSSING THE AREA AT RIGHT ANGLES TO ONE ANOTHER TO GUARANTEE PROPER COVERAGE. ON SLOPING LAND, SEEDING OPERATIONS SHALL FOLLOW THE GENERAL CONTOUR. AREAS TOO SMALL TO DRILL SEED MAY BE BROADCAST BY HAND AND APPLICATION RATES SHALL BE DOUBLED. SEEDING OF ANY KIND WILL NOT BE PERMITTED WHEN WIND VELOCITY IS SUCH AS TO PREVENT UNIFORM SEED DISTRIBUTION. NO APPLICATION SHALL TAKE PLACE WITH THE PRESENCE OF FREE SURFACE WATER OR WHEN GROUND IS FROZEN OR CANNOT BE TILLED. ADDITIONAL TOPICAL OVER SEEDING MAY BE APPLIED TO PREVIOUSLY SEEDED AREAS IN ORDER TO ACHIEVE ADEQUATE GROUND COVER AND EROSION RESISTANCE.

5) SEEDED AREAS MAY REQUIRE TEMPORARY ABOVE GROUND SPRAY IRRIGATION UNTIL ESTABLISHMENT. IRRIGATION SHALL BE REMOVED UPON ACCEPTANCE BY THE CITY. WHERE STEEP SLOPES OCCUR, LANDSCAPE CONTRACTOR MAY REQUIRE VARIOUS METHODS OF TEMPORARY IRRIGATION TO ACHIEVE SEED ESTABLISHMENT. SUCH METHODS SHALL BE IN COMPLIANCE WITH THE PROJECT'S EROSION CONTROL METHODS, BMP'S AND ALL CITY CODES AND REQUIREMENTS.

NOTES:
1. DISTURBED AREAS TO BE RE-VEGETATED PER THE GRADING AND EROSION CONTROL PLANS.
2. PER TREE CONSERVATION PLAN, ALL MITIGATED SHRUBS FROM REMOVAL OF EXISTING SHRUB MASSES SHALL BE PLANTED WITHIN THE PROPOSED LANDSCAPE.
3, LANDSCAPE PLACEMENT IN THE TREE LAWN ADJACENT TO LOTS IS NOT FINAL AND MAY CHANGE BASED UPON DRIVEWAY AND UTILITY LOCATIONS.
4. NO FENCES OR STRUCTURES WILL BE ALLOWED WITHIN SIGHT TRIANGLES.
5. SHRUBS AND PLANTINGS WILL BE NO TALLER THAN 2 FEET

6) MULCH WILL BE HYDRO MULCH. HYDRO MULCH SHALL BE CONWED 200 AND TACKIFIER OR APPROVED SUBSTITUTE MEETING THE FOLLOWING REQUIREMENTS:
I. VIRGIN WOOD CELLULOSE FIBER: MAY NOT CONTAIN ANY SUBSTANCE OR FIBER THAT MAY INHIBIT GERMINATION OF GROWTH OF GRASS SEEDS AND PLANTS.
II. DYE TO APPROPRIATE COLOR TO ALLOW PROPER METERING OF APPLICATION.
III. FIBERS MUST HAVE ABILITY TO BECOME EVENLY DISPERSED AND SUSPENDED WHEN AGITATED IN WATER.
IV. WHEN SPRAYED UNIFORMLY ON SURFACE OF SOIL, FIBERS SHALL FORM BLOTTER - LIKE GROUND COVER THAT READILY ABSORBS WATER, AND ALLOWS INFILTRATION TO UNDERLYING SOIL.
V. WEIGHT SPECIFICATIONS SHALL REFER ONLY TO AIR DRY WEIGHT OF FIBERS WITH A STANDARD MOISTURE CONTENT OF TEN PERCENT (10%).
VI. MULCH MATERIAL SHALL BE SUPPLIED IN CONTAINERS NOT WEIGHING OVER ONE HUNDRED (100) LBS AND SHOWING AIR DRY WEIGHT OF FIBERS.
VII. ORGANIC TAKIFIER MAY BE SUPPLIED WITH HYDROMULCH FIBERS OR BE ADDED AT A LATER TIME.

WEED MANAGEMENT

BEFORE SEEDING, REMOVE EXISTING WEEDS BY PULLING, TILLING UNDER AND/OR, APPLYING A GLYPHOSATE HERBICIDE SUCH AS ROUNDUP®*, OR BY A COMBINATION OF THESE METHODS. FOR ADDITIONAL WEED CONTROL AFTER SITE PREPARATION, A SOIL FUMIGANT MAY BE USED, OR THE AREA MAY BE IRRIGATED TO ENCOURAGE WEED GROWTH AND THEN SPRAYED WITH A GENERAL HERBICIDE.
IN VERY WEEDY AREAS, THE FOLLOWING METHOD IS SUGGESTED: (1) TILL SOIL OR SPRAY VEGETATION WITH ROUNDUP®*. WHEN USING AN HERBICIDE, ALLOW VEGETATION TO DIE, THEN RAKE OUT THE DEAD DEBRIS. IF PERENNIAL WEEDS SUCH AS BINDWEED ARE PRESENT, USING AN HERBICIDE IS MORE EFFECTIVE THAN TILLING. (2) IRRIGATE TO ENCOURAGE GERMINATION OF WEED SEEDS NEAR THE SURFACE; MOST SEEDS WILL GERMINATE WITHIN TWO WEEKS IF CONSISTENT MOISTURE IS AVAILABLE. DO NOT TILL THE SOIL AGAIN BECAUSE THIS WILL BRING EVEN MORE WEED SEEDS UP TO THE SURFACE, (3) SPRAY ANY NEW GROWTH WITH ROUNDUP®*. (4) AFTER RAKING OUT DEAD VEGETATION, ALLOW SOIL TO RECOVER FOR-4 WEEKS BEFORE PLANTING SEE. A RECOVERY PERIOD OF THIS DURATION IS ADVISABLE BECAUSE EXTENSIVE USE OF GLYPHOSATE HERBICIDES MAY CAUSE A DELAY IN GERMINATION AND IN THE VIGOROUS GROWTH OF SEEDLINGS. ONCE THE SEEDS HAVE GERMINATED, FURTHER WEED CONTROL IS USUALLY NECESSARY. IF PRACTICAL, PULL ALL WEEDS AS SOON AS THEY CAN BE IDENTIFIED. OTHER SUCCESSFUL TECHNIQUES ARE SPOT-SPRAYING WITH A GENERAL HERBICIDE OR SELECTIVELY CUTTING WEEDS WITH A STRING TRIMMER. BE SURE TO REMOVE WEEDS BEFORE THEY RESEED.
ONCE ESTABLISHED, NATIVE AREAS MAY BE MOWED TWICE A SEASON OR AS REQUIRED TO MINIMIZE WEED GROWTH. FURTHER MOWING ADJACENT TO ROADWAYS AND PARK AREAS MAY BE REQUIRED AS SEASONAL DROUGHT AND FIRE CONDITIONS MAY DICTATE.

# PLANT SCHEDULE FILING 9

| DECIDUOUS TREES | QTY | BOTANICAL NAME | COMMON NAME | CONT | CAL / SIZE |
|---|---|---|---|---|---|
| AE | 9 | ACER PLATANOIDES `EMERALD QUEEN` | EMERALD QUEEN MAPLE | B & B | 2.5"CAL |
| AS | 11 | ACER PLATANOIDES `SCHWEDLERI` | SCHWEDLER MAPLE | B & B | 2.5"CAL |
| HAC | 8 | CELTIS OCCIDENTALIS | COMMON HACKBERRY | B & B | 2.5"CAL |
| GI | 12 | GLEDITSIA TRIACANTHOS `IMPERIAL` | IMPERIAL HONEYLOCUST | B & B | 2.5"CAL |
| GK | 18 | GYMNOCLADUS DIOICA | KENTUCKY COFFEE TREE | B & B | 2.5"CAL |
| OV | 7 | OSTRYA VIRGINIANA | AMERICAN HORNBEAM | B & B | 2.5"CAL |
| PO | 17 | PLATANUS OCCIDENTALIS | AMERICAN SYCAMORE | B & B | 2.5"CAL |
| QC | 11 | QUERCUS MACDANIELLI `CLEMONS` TM | HERITAGE OAK | B & B | 2.5"CAL |
| QM | 7 | QUERCUS MACROCARPA | BURR OAK | B & B | 2.5"CAL |
| QM2 | 11 | QUERCUS MUEHLENBERGII | CHINKAPIN OAK | B & B | 2.5"CAL |
| QR | 15 | QUERCUS RUBRA | RED OAK | B & B | 2.5"CAL |
| RAL | 9 | TILIA AMERICANA `REDMOND` | REDMOND AMERICAN LINDEN | B & B | 2.5"CAL |
| TG2 | 14 | TILIA CORDATA `GLENLEVEN` | GLENLEVEN LITTLELEAF LINDEN | B & B | 2.5"CAL |
| TG | 25 | TILIA CORDATA `GREENSPIRE` | GREENSPIRE LITTLELEAF LINDEN | B & B | 2.5"CAL |
| UP | 19 | ULMUS AMERICANA `PRINCETON` | AMERICAN ELM | B & B | 2.5"CAL |

| EVERGREEN TREES | QTY | BOTANICAL NAME | COMMON NAME | CONT | CAL / SIZE |
|---|---|---|---|---|---|
| VAN | 19 | PINUS FLEXILIS `VANDERWOLF`S PYRAMID` | VANDERWOLF`S PYRAMID PINE | B & B | 6'-8` HT |
| PSP | 6 | PINUS FLEXILUS | LIMBER PINE | B & B | 6'-8` HT |
| PN | 6 | PINUS NIGRA | AUSTRIAN BLACK PINE | B & B | 6'-8` HT |

| ORNAMENTAL TREES | QTY | BOTANICAL NAME | COMMON NAME | CONT | CAL / SIZE |
|---|---|---|---|---|---|
| AG2 | 18 | ACER GLABRUM | ROCKY MOUNTAIN MAPLE | B & B | 2"CAL |
| AH | 9 | ACER TATARICUM `HOT WINGS` | HOT WINGS TATARIAN MAPLE | B & B | 2"CAL |

| DECIDUOUS SHRUBS | QTY | BOTANICAL NAME | COMMON NAME | CONT | HT X SPD |
|---|---|---|---|---|---|
| SSB | 44 | AMELANCHIER ALNIFOLIA `REGENT` | SASKATOON SERVICEBERRY | 5 GAL | 12` X 8` |
| AG | 50 | AMELANCHIER X GRANDIFLORA `AUTUMN BRILLIANCE` | `AUTUMN BRILLIANCE` SERVICEBERRY | 5 GAL | 15` X 10` |
| CB | 11 | CORNUS SERICEA `BAILEYI` | RED TWIG DOGWOOD | 5 GAL | 8` X 8` |
| PS2 | 16 | PENSTEMON STRICTUS | ROCKY MOUNTAIN PENSTEMON | 5 GAL | 2` X 3` |
| PA | 26 | PEROVSKIA ATRIPLICIFOLIA | RUSSIAN SAGE | 5 GAL | 5` X 4` |
| SCH | 58 | PRUNUS BESSEYI `PAWNEE BUTTES` | PAWNEE BUTTES SAND CHERRY | 5 GAL | 18" X 6` |
| RW | 54 | ROSA MEIDILAND SERIES `WHITE` | WHITE MEIDILAND ROSE | 5 GAL | 2` X 4` |

| EVERGREEN SHRUBS | QTY | BOTANICAL NAME | COMMON NAME | CONT | HT X SPD |
|---|---|---|---|---|---|
| AC | 92 | ARCTOSTAPHYLOS X COLORADOENSIS `CHIEFTAIN` | MANZANITA | 5 GAL | 2` X 5` |
| JB | 49 | JUNIPERUS HORIZONTALIS `BLUE CHIP` | BLUE CHIP JUNIPER | 5 GAL | 8" X 10` |
| BUJ | 113 | JUNIPERUS SABINA `BUFFALO` | BUFFALO JUNIPER | 5 GAL | 2` X 6` |
| PS | 95 | PINUS MUGO `SLOWMOUND` | MUGO PINE | 5 GAL | 2.5` X 5` |

| ORNAMENTAL GRASSES | QTY | BOTANICAL NAME | COMMON NAME | CONT | HT X SPD |
|---|---|---|---|---|---|
| CK | 137 | CALAMAGROSTIS X ACUTIFLORA `KARL FOERSTER` | FEATHER REED GRASS | 1 GAL | 4-5`X2` |
| MY | 418 | MISCANTHUS SINENSIS `YAKU JIMA` | YAKU JIMA DWARF MAIDEN GRASS | 1 GAL | 3` X 3` |
| PB2 | 161 | PENNISETUM ALOPECUROIDES `LITTLE BUNNY` | LITTLE BUNNY FOUNTAIN GRASS | 1 GAL | 1` X 2` |

| GROUND COVERS | QTY | BOTANICAL NAME | COMMON NAME | CONT |
|---|---|---|---|---|
| | 65,447 SF | ENVIROTURF<br>RE: LANDSCAPE NOTES | ENVIROTURF | SOD |
| | 24,576 SF | ROCK MULCH GREY, 4" DIA. COBBLE<br>4" DEPTH, RE: LDSCP NOTES | ROCK MULCH GREY, 4" DIA. COBBLE | MULCH |
| | 6,047 SF | ROCK MULCH TAN, 4" DIA. COBBLE<br>4" DEPTH, RE: LDSCP NOTES | ROCK MULCH TAN, 4" DIA. COBBLE | MULCH |
| | | TEMPORARILY IRRIGATED NATIVE SEED MIX<br>RE: LANDSCAPE NOTES | | |

## SEED MIXES

TOWN OF PARKER

### SEED MIX 1

| COMMON NAME | PERCENTAGE |
|---|---|
| CANADA WILDRYE | 20% |
| CRESTED WHEATGRASS | 15% |
| SLENDER WHEATGRASS | 15% |
| ANNUAL RYEGRASS | 10% |
| SHEEP FESCUE | 10% |
| BIG BLUESTEM | 10% |
| SIDEOATS GRAMA | 10% |
| CANADA BLUEGRASS | 5% |
| BLUE GRAMA | 5% |

SEEDING RATE
DRILLED: 25 LBS/AC.
BROADCAST: 50LBS/AC.

### SEED MIX 2

| COMMON NAME | PERCENTAGE |
|---|---|
| SLENDER WHEATGRASS | 22% |
| SODAR STREAMBANK WHEATGRASS | 18% |
| ARIZONA FESCUE | 13% |
| BLUE GRAMA | 13% |
| BUFFALO GRASS | 12% |
| BARLEY OR OATS | 12% |
| SPIKE MUHLY | 5% |
| INDIAN RICEGRASS | 5% |

SEEDING RATE
DRILLED: 25 LBS/AC.
BROADCAST: 50LBS/AC.

### TEMPORARILY IRRIGATED NATIVE SEED MIX

| COMMON NAME | PERCENTAGE |
|---|---|
| EPHRAIM CRESTED WHEATGRASS | 25% |
| SHEEP FESCUE | 23% |
| PERENNIAL RYEGRASS | 18% |
| CANADA BLUEGRASS | 13% |
| BARLEY OR OATS | 12% |
| BLUE FESCUE | 9% |

SEEDING




## LEGEND

OPEN RAIL FENCE

| GROUND COVERS | QTY | BOTANICAL NAME |
|---|---|---|
| | 65,447 SF | ENVIROTURF RE: LANDSCAPE NOTES |
| | 24,576 SF | ROCK MULCH GREY, 4" DIA. COBBLE 4" DEPTH, RE: LDSCP NOTES |
| | 6,047 SF | ROCK MULCH TAN, 4" DIA. COBBLE 4" DEPTH, RE: LDSCP NOTES |
| | | TEMPORARILY IRRIGATED NATIVE SEED MIX RE: LANDSCAPE NOTES |

NOTES:
1. LANDSCAPE MATERIAL AND TREES IN TREE LAWNS ADJACENT TO LOTS ARE RESPONSIBILITY OF HOME BUILDER. STREET TREE LOCATIONS ARE NOT FINAL AND MAY CHANGE BASED UPON DRIVEWAY LOCATION
2. NO FENCES OR STRUCTURES WILL BE ALLOWED WITHIN SIGHT TRIANGLES.
3. SHRUBS & PERENNIALS WITHIN SIGHT TRIANGLES WILL BE NO HIGHER THAN 2'
4. OPEN SPACE TRACTS SHALL BE RE-SEEDED AND RETURNED TO THEIR NATURAL STATE

NORTH

0 40' 80' 120' 240'

SCALE: 1"=120'-0"

■ Prepared For■

E5X MANAGEMENT
7353 SOUTH ALTON WAY
CENTENNIAL, CO 80112

■ Land Planning ■

people creating spaces


pcs group inc. www.pcsgroupco.com
#3, B-180 Independence plaza
1007 16th street . denver co 80265
t 303.531.4905 . f 303.531.4908


■ Engineering ■

CVL CONSULTANTS


10333 E. DRY CREEK RD. #240
ENGLEWOOD, CO 80112
720-482-9526


# TRAILS AT CROWFOOT
## FILING NO. 9
PARKER, COLORADO
LANDSCAPE PLANS

| | |
|---|---|
| Drawn by: | JWI, BEM, GG |
| Checked by: | PCS STAFF |
| Submittal Date: | 12.08.2017 |
| | 01.26.2017 |
| | 02.20.2018 |
| | 04.6.2018 |
| | 08.10.2018 |

Know what's below. Call before you dig. 811

■ Sheet Name ■
OVERALL LANDSCAPE PLAN

■ Sheet Number ■
L1.1

MATCHLINE - SHEET L1.3

RETAINING WALLS AS PART OF FILING 1, RE: CIVIL PLANS

10' REGIONAL TRAIL IN THIS AREA TO BE COMPLETED DURING FILING 1, PRIOR TO FILING 9

FILING 9 LIMIT OF LANDSCAPE

TEMPORARILY IRRIGATED NATIVE SEED MIX FOR AREAS DISTURBED BY GRADING

10' REGIONAL TRAIL TO BE CONTINUED AS PART OF FILING 9, RE: CIVIL PLANS

TEMPORARILY IRRIGATED NATIVE SEED MIX FOR AREAS DISTURBED BY GRADING

LANDSCAPE IN THIS AREA TO BE DEVELOPED AS PART OF FILING 1

FILING 9 LIMIT OF PROPOSED GRADING

ENHANCED LANDSCAPE TO BE DEVELOPED AS PART OF FUTURE SCHOOL PLANS

FUTURE LANDSCAPE TO BE COMPLETED AS PART OF ULTIMATE ROADWAY CONSTRUCTION BY OTHERS

ROW

UTILITY EASEMENT

LANDSCAPE IN THIS AREA TO BE DEVELOPED AS PART OF FILING 1

TRACT B

7 B

8 B

9 B

10 A

11 A

12 A

13 A

14 A

MATCHLINE - SHEET L1.8

MATCHLINE - SHEET L1.3

## PLANT & GROUNDCOVER LIST

| DECIDUOUS TREES | COMMON NAME |
|---|---|
| UP | AMERICAN ELM |
| OV | AMERICAN HORNBEAM |
| PO | AMERICAN SYCAMORE |
| QM | BURR OAK |
| QM2 | CHINKAPIN OAK |
| HAC | COMMON HACKBERRY |
| AE | EMERALD QUEEN MAPLE |
| TG2 | GLENLEVEN LITTLELEAF LINDEN |
| TG | GREENSPIRE LITTLELEAF LINDEN |
| QC | HERITAGE OAK |
| GI | IMPERIAL HONEYLOCUST |
| GK | KENTUCKY COFFEE TREE |
| QR | RED OAK |
| RAL | REDMOND AMERICAN LINDEN |
| AS | SCHWEDLER MAPLE |

| EVERGREEN TREES | COMMON NAME |
|---|---|
| PN | AUSTRIAN BLACK PINE |
| PSP | LIMBER PINE |
| VAN | VANDERWOLF`S PYRAMID PINE |

| ORNAMENTAL TREES | COMMON NAME |
|---|---|
| AH | HOT WINGS TATARIAN MAPLE |
| AG2 | ROCKY MOUNTAIN MAPLE |

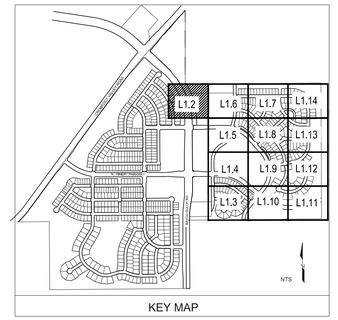
| DECIDUOUS SHRUBS | COMMON NAME |
|---|---|
| SCH | PAWNEE BUTTES SAND CHERRY |
| CB | RED TWIG DOGWOOD |
| PS2 | ROCKY MOUNTAIN PENSTEMON |
| PA | RUSSIAN SAGE |
| SSB | SASKATOON SERVICEBERRY |
| RW | WHITE MEIDILAND ROSE |
| AG | `AUTUMN BRILLIANCE` SERVICEBERRY |

| EVERGREEN SHRUBS | COMMON NAME |
|---|---|
| JB | BLUE CHIP JUNIPER |
| BUJ | BUFFALO JUNIPER |
| AC | MANZANITA |
| PS | MUGO PINE |

| ORNAMENTAL GRASSES | COMMON NAME |
|---|---|
| CK | FEATHER REED GRASS |
| PB2 | LITTLE BUNNY FOUNTAIN GRASS |
| MY | YAKU JIMA DWARF MAIDEN GRASS |

| GROUND COVERS | COMMON NAME |
|---|---|
| | ENVIROTURF |
| | ROCK MULCH GREY, 4" DIA. COBBLE |
| | ROCK MULCH TAN, 4" DIA. COBBLE |
| | TEMPORARILY IRRIGATED NATIVE SEED MIX |

NOTES:
1. LANDSCAPE MATERIAL AND TREES IN TREE LAWNS ADJACENT TO LOTS ARE RESPONSIBILITY OF HOME BUILDER. STREET TREE LOCATIONS ARE NOT FINAL AND MAY CHANGE BASED UPON DRIVEWAY LOCATION.
2. NO FENCES OR STRUCTURES WILL BE ALLOWED WITHIN SIGHT TRIANGLES.
3. SHRUBS & PERENNIALS WITHIN SIGHT TRIANGLES WILL BE NO HIGHER THAN 2'



KEY MAP

NORTH

0 10' 20' 30' 60'

SCALE: 1"=30'-0"

MATCHLINE - SHEET L1.3


■ Prepared For■

E5X MANAGEMENT
7353 SOUTH ALTON WAY
CENTENNIAL, CO 80112

■ Land Planning ■

people creating spaces
pcs group inc. www.pcsgroupco.com
#3, B-180 Independence plaza
1007 16th street . denver co 80265
t 303.531.4905 . f 303.531.4908

■ Engineering ■

CVL CONSULTANTS
10333 E. DRY CREEK RD. #240
ENGLEWOOD, CO 80112
720-482-9526


# TRAILS AT CROWFOOT
FILING NO. 9
PARKER, COLORADO
LANDSCAPE PLANS

Drawn by: JWI, BEM, GG
Checked by: PCS STAFF
Submittal Date: 12.08.2017
01.26.2017
02.20.2018
04.6.2018
08.10.2018

Know what's below. Call before you dig. 811

■ Sheet Name ■
LANDSCAPE PLAN

■ Sheet Number ■
L1.2

MATCHLINE - SHEET L1.4

MATCHLINE - SHEET L1.10

OV(3)

FILING 9 LIMIT OF LANDSCAPE

GI(3)

LANDSCAPE IN THIS AREA TO BE DEVELOPED IN FILING 13

SITE TRI

ROW LANDSCAPE TO BE DEVELOPED AS PART OF FILING 13

LANDSCAPE IN THIS AREA TO BE DEVELOPED IN FILING 13

UNDISTURBED AREA

FILING 9 LIMIT OF LANDSCAPE

FILING 9 LIMIT OF LANDSCAPE

TEMPORARILY IRRIGATED NATIVE SEED MIX FOR AREAS DISTURBED BY GRADING

OPEN RAIL FENCE 5 L2.0

FILING 9 LIMIT OF PROPOSED GRADING

UNDISTURBED AREA

PROPERTY LINE

UNDISTURBED AREA

STEEL EDGER 4 L2.0

AG(11)

MY(57)

GK(1)

AC(12)

OPEN RAIL FENCE 5 L2.0

FILING 9 LIMIT OF LANDSCAPE

OPEN RAIL FENCE 5 L2.0

QC(1)

HAC(4)

FILING 9 LIMIT OF LANDSCAPE

TEMPORARILY IRRIGATED NATIVE SEED MIX FOR AREAS DISTURBED BY GRADING

LIGHTPOLE RE: CIVIL PLANS

UNDISTURBED AREA

PROPERTY LINE

TRACT G

(3)TG

SITE TRI

## PLANT & GROUNDCOVER LIST

| DECIDUOUS TREES | COMMON NAME |
|---|---|
| UP | AMERICAN ELM |
| OV | AMERICAN HORNBEAM |
| PO | AMERICAN SYCAMORE |
| QM | BURR OAK |
| QM2 | CHINKAPIN OAK |
| HAC | COMMON HACKBERRY |
| AE | EMERALD QUEEN MAPLE |
| TG2 | GLENLEVEN LITTLELEAF LINDEN |
| TG | GREENSPIRE LITTLELEAF LINDEN |
| QC | HERITAGE OAK |
| GI | IMPERIAL HONEYLOCUST |
| GK | KENTUCKY COFFEE TREE |
| OR | RED OAK |
| RAL | REDMOND AMERICAN LINDEN |
| AS | SCHWEDLER MAPLE |

| EVERGREEN TREES | COMMON NAME |
|---|---|
| PN | AUSTRIAN BLACK PINE |
| PSP | LIMBER PINE |
| VAN | VANDERWOLF`S PYRAMID PINE |

| ORNAMENTAL TREES | COMMON NAME |
|---|---|
| AH | HOT WINGS TATARIAN MAPLE |
| AG2 | ROCKY MOUNTAIN MAPLE |

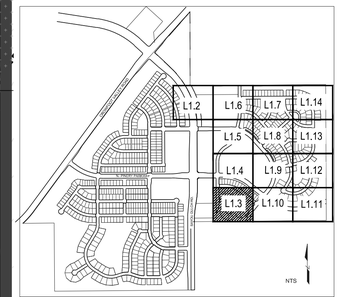
| DECIDUOUS SHRUBS | COMMON NAME |
|---|---|
| SCH | PAWNEE BUTTES SAND CHERRY |
| CB | RED TWIG DOGWOOD |
| PS2 | ROCKY MOUNTAIN PENSTEMON |
| PA | RUSSIAN SAGE |
| SSB | SASKATOON SERVICEBERRY |
| RW | WHITE MEIDILAND ROSE |
| AG | `AUTUMN BRILLIANCE` SERVICEBERRY |

| EVERGREEN SHRUBS | COMMON NAME |
|---|---|
| JB | BLUE CHIP JUNIPER |
| BUJ | BUFFALO JUNIPER |
| AC | MANZANITA |
| PS | MUGO PINE |

| ORNAMENTAL GRASSES | COMMON NAME |
|---|---|
| CK | FEATHER REED GRASS |
| PB2 | LITTLE BUNNY FOUNTAIN GRASS |
| MY | YAKU JIMA DWARF MAIDEN GRASS |

| GROUND COVERS | COMMON NAME |
|---|---|
| | ENVIROTURF |
| | ROCK MULCH GREY, 4" DIA. COBBLE |
| | ROCK MULCH TAN, 4" DIA. COBBLE |
| | TEMPORARILY IRRIGATED NATIVE SEED MIX |

NOTES:
1. LANDSCAPE MATERIAL AND TREES IN TREE LAWNS ADJACENT TO LOTS ARE RESPONSIBILITY OF HOME BUILDER. STREET TREE LOCATIONS ARE NOT FINAL AND MAY CHANGE BASED UPON DRIVEWAY LOCATION.
2. NO FENCES OR STRUCTURES WILL BE ALLOWED WITHIN SIGHT TRIANGLES.
3. SHRUBS & PERENNIALS WITHIN SIGHT TRIANGLES WILL BE NO HIGHER THAN 2'




KEY MAP

NORTH

0 10' 20' 30' 60'

SCALE: 1"=30'-0"


■ Prepared For■

E5X MANAGEMENT
7353 SOUTH ALTON WAY
CENTENNIAL, CO 80112

■ Land Planning ■

people creating spaces

pcs group inc. www.pcsgroupco.com
#3, B-180 Independence plaza
1007 16th street . denver co 80265
t 303.531.4905 . f 303.531.4908

■ Engineering ■

CVL CONSULTANTS
10333 E. DRY CREEK RD. #240
ENGLEWOOD, CO 80112
720-482-9526


# TRAILS AT CROWFOOT
FILING NO. 9
PARKER, COLORADO

LANDSCAPE PLANS

| | |
|---|---|
| Drawn by: | JWI, BEM, GG |
| Checked by: | PCS STAFF |
| Submittal Date: | 12.08.2017 |
| | 01.26.2017 |
| | 02.20.2018 |
| | 04.6.2018 |
| | 08.10.2018 |
| | |

Know what's below. Call before you dig. 811

■ Sheet Name ■

LANDSCAPE PLAN

■ Sheet Number ■

L1.3

Y:\HESS RANCH\LANDSCAPE ARCHITECTURE\CURRENT DWGS\HESS-LDSCP PLANS - FILING 9.DWG
Thursday, May 18, 2017

MATCHLINE - SHEET L1.5

LANDSCAPE WITHIN PARK TO BE DEVELOPED AS PART OF FILING 1 PARK PLANS

SIGHT TRI

LANDSCAPE WITHIN PARK TO BE DEVELOPED AS PART OF FILING 1 PARK PLANS

(5)QM2

LIGHTPOLE RE: CIVIL PLANS

TG(5)

RW(5)

FILING 9 LIMIT OF LANDSCAPE

BUJ(3)

(4)SCH (12)CK

LIGHTPOLE RE: CIVIL PLANS

UP(5)

LANDSCAPE WITHIN PARK TO BE DEVELOPED AS PART OF FILING 1 PARK PLANS

BUJ(8)
PS2(6)

AC(9)
CK(22)

BUJ(4)
PS(8)
RW(6)

(6)BUJ
CK(12)

LIGHTPOLE RE: CIVIL PLANS

6 L2.0 LANDSCAPE BOULDER

(9)PS
(6)RW

LIGHTPOLE RE: CIVIL PLANS

AC(9)

(3)AG2
SCH(4)

PA(5)

PS2(6)

(3)AG2
(4)PS2

PN(3)
(1)PO

PO(1)

MY(83)
AC(15)
AG(16)

LIGHTPOLE RE: CIVIL PLANS

TG(3)

LANDSCAPE IN THIS AREA TO BE DEVELOPED IN FILING 13. FENCING TO BE INSTALLED WITH FILING 9.

OPEN RAIL FENCE 5 L2.0

PSP(4)

SSB(15)
TG2(5)

(12)CK
(5)RW
(6)BUJ

LIGHTPOLE RE: CIVIL PLANS

PS(9)

TG2(2)

FILING 9 LIMIT OF LANDSCAPE

FILING 9 LIMIT OF LANDSCAPE

QR(5)

RAL(2)

MY(29)

SCH(4)

JB(11)

AH(3)

MY(33)

STEEL EDGER 4 L2.0

PS(6)
CK(10)
RW(3)

(18)BUJ

LANDSCAPE IN THIS AREA TO BE DEVELOPED IN A FUTURE FILING

SIGHT TRI

LANDSCAPE IN THIS AREA TO BE DEVELOPED IN FILING 13

VAN(4)

LIGHTPOLE RE: CIVIL PLANS

MATCHLINE - SHEET L1.3

MATCHLINE - SHEET L1.9

## PLANT & GROUNDCOVER LIST

| DECIDUOUS TREES | COMMON NAME |
|---|---|
| UP | AMERICAN ELM |
| OV | AMERICAN HORNBEAM |
| PO | AMERICAN SYCAMORE |
| QM | BURR OAK |
| QM2 | CHINKAPIN OAK |
| HAC | COMMON HACKBERRY |
| AE | EMERALD QUEEN MAPLE |
| TG2 | GLENLEVEN LITTLELEAF LINDEN |
| TG | GREENSPIRE LITTLELEAF LINDEN |
| QC | HERITAGE OAK |
| GI | IMPERIAL HONEYLOCUST |
| GK | KENTUCKY COFFEE TREE |
| QR | RED OAK |
| RAL | REDMOND AMERICAN LINDEN |
| AS | SCHWEDLER MAPLE |

| EVERGREEN TREES | COMMON NAME |
|---|---|
| PN | AUSTRIAN BLACK PINE |
| PSP | LIMBER PINE |
| VAN | VANDERWOLF`S PYRAMID PINE |

| ORNAMENTAL TREES | COMMON NAME |
|---|---|
| AH | HOT WINGS TATARIAN MAPLE |
| AG2 | ROCKY MOUNTAIN MAPLE |

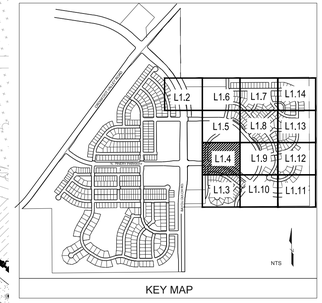
| DECIDUOUS SHRUBS | COMMON NAME |
|---|---|
| SCH | PAWNEE BUTTES SAND CHERRY |
| CB | RED TWIG DOGWOOD |
| PS2 | ROCKY MOUNTAIN PENSTEMON |
| PA | RUSSIAN SAGE |
| SSB | SASKATOON SERVICEBERRY |
| RW | WHITE MEIDILAND ROSE |
| AG | `AUTUMN BRILLIANCE` SERVICEBERRY |

| EVERGREEN SHRUBS | COMMON NAME |
|---|---|
| JB | BLUE CHIP JUNIPER |
| BUJ | BUFFALO JUNIPER |
| AC | MANZANITA |
| PS | MUGO PINE |

| ORNAMENTAL GRASSES | COMMON NAME |
|---|---|
| CK | FEATHER REED GRASS |
| PB2 | LITTLE BUNNY FOUNTAIN GRASS |
| MY | `YAKU JIMA DWARF MAIDEN GRASS |

| GROUND COVERS | COMMON NAME |
|---|---|
| | ENVIROTURF |
| | ROCK MULCH GREY, 4" DIA. COBBLE |
| | ROCK MULCH TAN, 4" DIA. COBBLE |
| | TEMPORARILY IRRIGATED NATIVE SEED MIX |

NOTES:
1. LANDSCAPE MATERIAL AND TREES IN TREE LAWNS ADJACENT TO LOTS ARE RESPONSIBILITY OF HOME BUILDER. STREET TREE LOCATIONS ARE NOT FINAL AND MAY CHANGE BASED UPON DRIVEWAY LOCATION.
2. NO FENCES OR STRUCTURES WILL BE ALLOWED WITHIN SIGHT TRIANGLES.
3. SHRUBS & PERENNIALS WITHIN SIGHT TRIANGLES WILL BE NO HIGHER THAN 2'



KEY MAP

NORTH
0 10' 20' 30' 60'
SCALE: 1"=30'-0"


■ Prepared For■

E5X MANAGEMENT
7353 SOUTH ALTON WAY
CENTENNIAL, CO 80112

■ Land Planning ■

people creating spaces
pcs group inc. www.pcsgroupco.com
#3, B-180 Independence plaza
1007 16th street . denver co 80265
t 303.531.4905 . f 303.531.4908

■ Engineering ■

CVL CONSULTANTS
10333 E. DRY CREEK RD. #240
ENGLEWOOD, CO 80112
720-482-9526


# TRAILS AT CROWFOOT
FILING NO. 9
PARKER, COLORADO

LANDSCAPE PLANS

| | |
|---|---|
| Drawn by: | JWI, BEM, GG |
| Checked by: | PCS STAFF |
| Submittal Date: | 12.08.2017 |
| | 01.26.2017 |
| Know what's below. Call before you dig. 811 | 02.20.2018 |
| | 04.6.2018 |
| | 08.10.2018 |

■ Sheet Name ■

LANDSCAPE PLAN

■ Sheet Number ■

L1.4

Y:\HESS RANCH\LANDSCAPE ARCHITECTURE\CURRENT DWGS\HESS-LDSCP PLANS - FILING 9.DWG

MATCHLINE - SHEET L1.6

MATCHLINE - SHEET L1.8

MATCHLINE - SHEET L1.4

QM (3)

LANDSCAPE IN THIS AREA TO BE DEVELOPED AS PART OF FUTURE SCHOOL PLANS

TEMPORARILY IRRIGATED NATIVE SEED MIX FOR AREAS DISTURBED BY GRADING

FILING 9 LIMIT OF LANDSCAPE

LANDSCAPE MATERIAL AND TREES IN TREE LAWNS ADJACENT TO LOTS ARE RESPONSIBILITY OF HOME BUILDER AND NOT INCLUDED ON THIS PLAN. THIS LANDSCAPE TO BE INSTALLED AS PART OF FILING 10

SIGHT TRI

SIGHT TRI

SIGHT TRI

(3) QR

FILING 9 LIMIT OF LANDSCAPE

LIGHTPOLE RE: CIVIL PLANS

(2) CK

(2) QM

FILING 9 LIMIT OF LANDSCAPE

ATTACHED WALK, RE: CIVIL PLANS

STREET TREES IN ROW TO BE INSTALLED WITH FILING 9.

LANDSCAPE WITHIN PARK TO BE DEVELOPED AS PART OF FILING 1 PARK PLANS

T 22

B 21

B 20

B 19

A

## PLANT & GROUNDCOVER LIST

| DECIDUOUS TREES | COMMON NAME |
|---|---|
| UP | AMERICAN ELM |
| OV | AMERICAN HORNBEAM |
| PO | AMERICAN SYCAMORE |
| QM | BURR OAK |
| QM2 | CHINKAPIN OAK |
| HAC | COMMON HACKBERRY |
| AE | EMERALD QUEEN MAPLE |
| TG2 | GLENLEVEN LITTLELEAF LINDEN |
| TG | GREENSPIRE LITTLELEAF LINDEN |
| QC | HERITAGE OAK |
| GI | IMPERIAL HONEYLOCUST |
| GK | KENTUCKY COFFEE TREE |
| QR | RED OAK |
| RAL | REDMOND AMERICAN LINDEN |
| AS | SCHWEDLER MAPLE |

| EVERGREEN TREES | COMMON NAME |
|---|---|
| PN | AUSTRIAN BLACK PINE |
| PSP | LIMBER PINE |
| VAN | VANDERWOLF`S PYRAMID PINE |

| ORNAMENTAL TREES | COMMON NAME |
|---|---|
| AH | HOT WINGS TATARIAN MAPLE |
| AG2 | ROCKY MOUNTAIN MAPLE |

| DECIDUOUS SHRUBS | COMMON NAME |
|---|---|
| SCH | PAWNEE BUTTES SAND CHERRY |
| CB | RED TWIG DOGWOOD |
| PS2 | ROCKY MOUNTAIN PENSTEMON |
| PA | RUSSIAN SAGE |
| SSB | SASKATOON SERVICEBERRY |
| RW | WHITE MEIDILAND ROSE |
| AG | `AUTUMN BRILLIANCE` SERVICEBERRY |

| EVERGREEN SHRUBS | COMMON NAME |
|---|---|
| JB | BLUE CHIP JUNIPER |
| BUJ | BUFFALO JUNIPER |
| AC | MANZANITA |
| PS | MUGO PINE |

| ORNAMENTAL GRASSES | COMMON NAME |
|---|---|
| CK | FEATHER REED GRASS |
| PB2 | LITTLE BUNNY FOUNTAIN GRASS |
| MY | YAKU JIMA DWARF MAIDEN GRASS |

| GROUND COVERS | COMMON NAME |
|---|---|
| | ENVIROTURF |
| | ROCK MULCH GREY, 4" DIA. COBBLE |
| | ROCK MULCH TAN, 4" DIA. COBBLE |
| | TEMPORARILY IRRIGATED NATIVE SEED MIX |

NOTES:
1. LANDSCAPE MATERIAL AND TREES IN TREE LAWNS ADJACENT TO LOTS ARE RESPONSIBILITY OF HOME BUILDER. STREET TREE LOCATIONS ARE NOT FINAL AND MAY CHANGE BASED UPON DRIVEWAY LOCATION.
2. NO FENCES OR STRUCTURES WILL BE ALLOWED WITHIN SIGHT TRIANGLES.
3. SHRUBS & PERENNIALS WITHIN SIGHT TRIANGLES WILL BE NO HIGHER THAN 2'




KEY MAP

NORTH 0 10' 20' 30' 60'
SCALE: 1"=30'-0"


■ Prepared For ■

E5X MANAGEMENT
7353 SOUTH ALTON WAY
CENTENNIAL, CO 80112

■ Land Planning ■

people creating spaces
pcs group inc. www.pcsgroupco.com
#3, B-180 Independence plaza
1007 16th street . denver co 80265
t 303.531.4905 . f 303.531.4908

■ Engineering ■

CVL CONSULTANTS
10333 E. DRY CREEK RD. #240
ENGLEWOOD, CO 80112
720-482-9526


# TRAILS AT CROWFOOT
FILING NO. 9
PARKER, COLORADO
LANDSCAPE PLANS

| | |
|---|---|
| Drawn by: | JWI, BEM, GG |
| Checked by: | PCS STAFF |
| Submittal Date: | 12.08.2017 |
| | 01.26.2017 |
| Know what's below Call before you dig. 811 | 02.20.2018 |
| | 04.6.2018 |
| | 08.10.2018 |

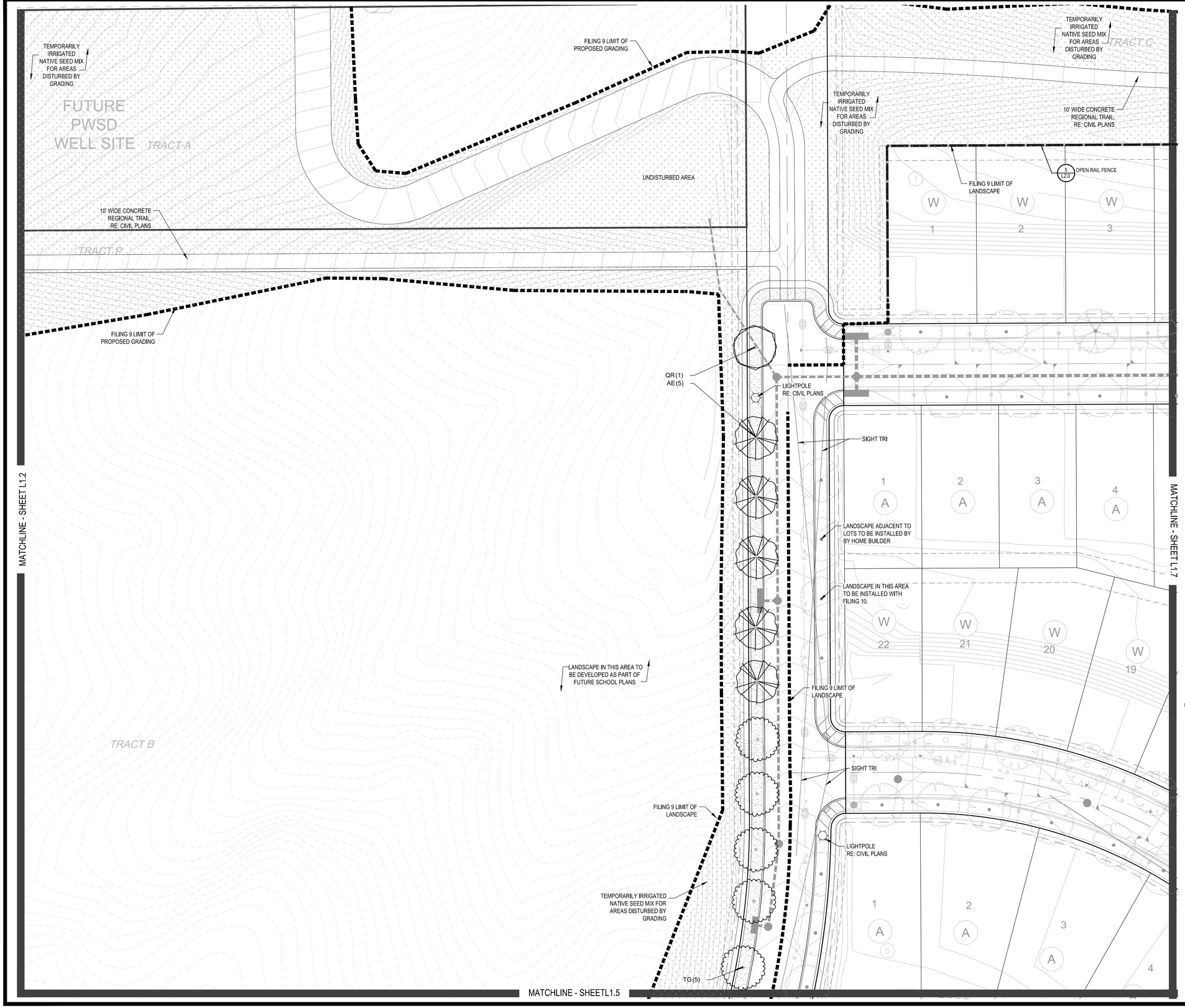
■ Sheet Name ■

LANDSCAPE PLAN

■ Sheet Number ■

L1.5

Y:\HESS RANCH\LANDSCAPE ARCHITECTURE\CURRENT DWGS\HESS-LDSCP PLANS - FILING 9.DWG




## PLANT & GROUNDCOVER LIST

| DECIDUOUS TREES | COMMON NAME |
|---|---|
| UP | AMERICAN ELM |
| OV | AMERICAN HORNBEAM |
| PO | AMERICAN SYCAMORE |
| QM | BURR OAK |
| QM2 | CHINKAPIN OAK |
| HAC | COMMON HACKBERRY |
| AE | EMERALD QUEEN MAPLE |
| TG2 | GLENLEVEN LITTLELEAF LINDEN |
| TG | GREENSPIRE LITTLELEAF LINDEN |
| QC | HERITAGE OAK |
| GI | IMPERIAL HONEYLOCUST |
| GK | KENTUCKY COFFEE TREE |
| QR | RED OAK |
| RAL | REDMOND AMERICAN LINDEN |
| AS | SCHWEDLER MAPLE |

| EVERGREEN TREES | COMMON NAME |
|---|---|
| PN | AUSTRIAN BLACK PINE |
| PSP | LIMBER PINE |
| VAN | VANDERWOLF`S PYRAMID PINE |

| ORNAMENTAL TREES | COMMON NAME |
|---|---|
| AH | HOT WINGS TATARIAN MAPLE |
| AG2 | ROCKY MOUNTAIN MAPLE |

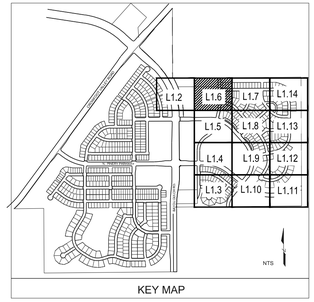
| DECIDUOUS SHRUBS | COMMON NAME |
|---|---|
| SCH | PAWNEE BUTTES SAND CHERRY |
| CB | RED TWIG DOGWOOD |
| PS2 | ROCKY MOUNTAIN PENSTEMON |
| PA | RUSSIAN SAGE |
| SSB | SASKATOON SERVICEBERRY |
| RW | WHITE MEIDILAND ROSE |
| AG | `AUTUMN BRILLIANCE` SERVICEBERR |

| EVERGREEN SHRUBS | COMMON NAME |
|---|---|
| JB | BLUE CHIP JUNIPER |
| BUJ | BUFFALO JUNIPER |
| AC | MANZANITA |
| PS | MUGO PINE |

| ORNAMENTAL GRASSES | COMMON NAME |
|---|---|
| CK | FEATHER REED GRASS |
| PB2 | LITTLE BUNNY FOUNTAIN GRASS |
| MY | YAKU JIMA DWARF MAIDEN GRASS |

| GROUND COVERS | COMMON NAME |
|---|---|
| | ENVIROTURF |
| | ROCK MULCH GREY, 4" DIA. COBBLE |
| | ROCK MULCH TAN, 4" DIA. COBBLE |
| | TEMPORARILY IRRIGATED NATIVE SEED MIX |

NOTES:
1. LANDSCAPE MATERIAL AND TREES IN TREE LAWNS ADJACENT TO LOTS ARE RESPONSIBILITY OF HOME BUILDER. STREET TREE LOCATIONS ARE NOT FINAL AND MAY CHANGE BASED UPON DRIVEWAY LOCATION.
2. NO FENCES OR STRUCTURES WILL BE ALLOWED WITHIN SIGHT TRIANGLES.
3. SHRUBS & PERENNIALS WITHIN SIGHT TRIANGLES WILL BE NO HIGHER THAN 2'



KEY MAP

NORTH
0 10' 20' 30' 60'
SCALE: 1"=30'-0"


■ Prepared For■

E5X MANAGEMENT
7353 SOUTH ALTON WAY
CENTENNIAL, CO 80112

■ Land Planning ■

people creating spaces
pcs group inc. www.pcsgroupco.com
#3, B-180 Independence plaza
1007 16th street . denver co 80265
t 303.531.4905 . f 303.531.4908

■ Engineering ■

CVL CONSULTANTS
10333 E. DRY CREEK RD. #240
ENGLEWOOD, CO 80112
720-482-9526


# TRAILS AT CROWFOOT
FILING NO. 9
PARKER, COLORADO

LANDSCAPE PLANS

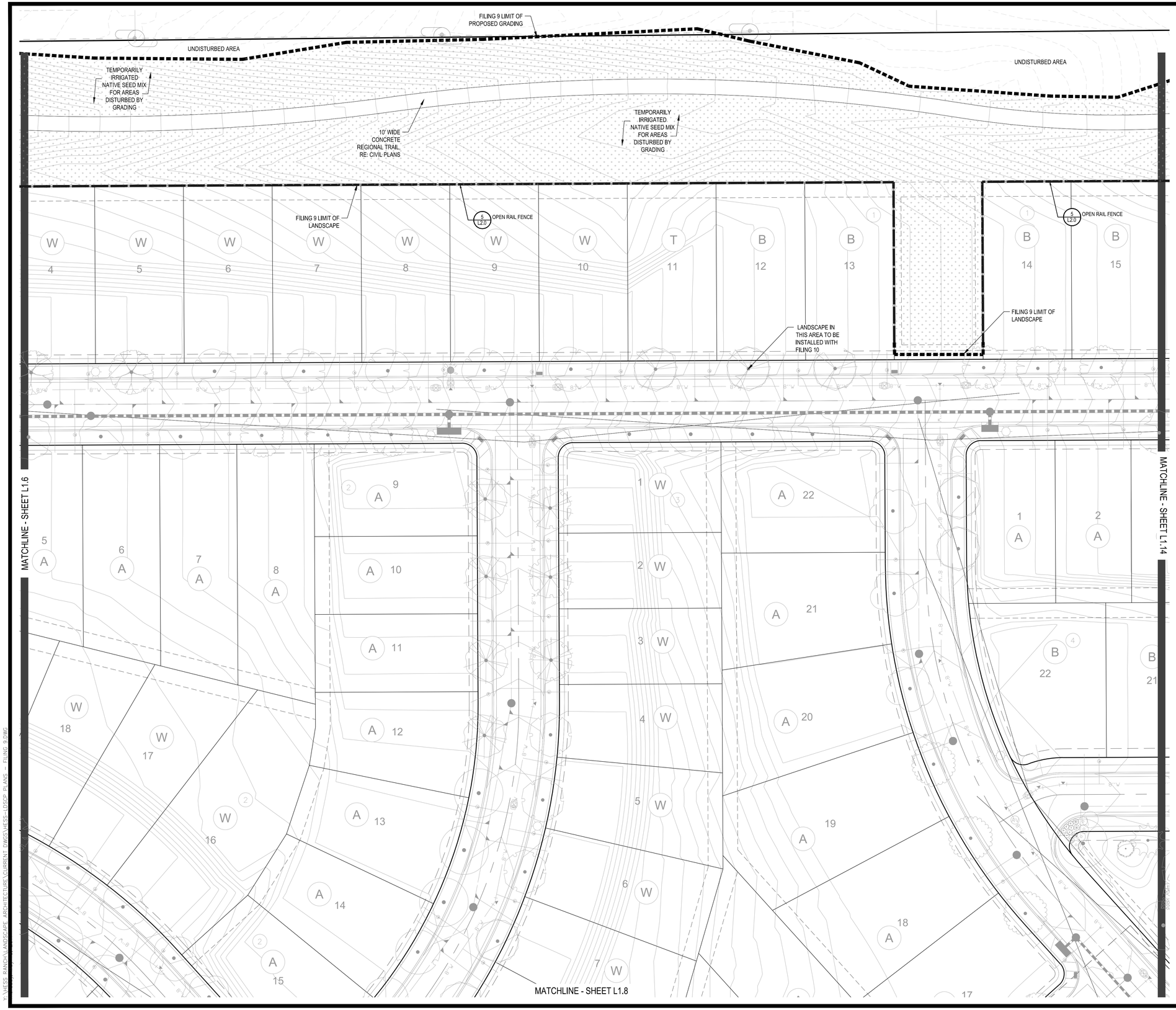
| | |
|---|---|
| Drawn by: | JWI, BEM, GG |
| Checked by: | PCS STAFF |
| Submittal Date: | 12.08.2017 |
| | 01.26.2017 |
| | 02.20.2018 |
| | 04.6.2018 |
| | 08.10.2018 |

Know what's below. Call before you dig. 811

■ Sheet Name ■
LANDSCAPE PLAN

■ Sheet Number ■
L1.6


Y:\HESS RANCH\LANDSCAPE ARCHITECTURE\CURRENT DWGS\HESS-LDSCP PLANS - FILING 9.DWG
Thursday, May 18, 2017




## PLANT & GROUNDCOVER LIST

| DECIDUOUS TREES | COMMON NAME |
|---|---|
| UP | AMERICAN ELM |
| OV | AMERICAN HORNBEAM |
| PO | AMERICAN SYCAMORE |
| QM | BURR OAK |
| QM2 | CHINKAPIN OAK |
| HAC | COMMON HACKBERRY |
| AE | EMERALD QUEEN MAPLE |
| TG2 | GLENLEVEN LITTLELEAF LINDEN |
| TG | GREENSPIRE LITTLELEAF LINDEN |
| QC | HERITAGE OAK |
| GI | IMPERIAL HONEYLOCUST |
| GK | KENTUCKY COFFEE TREE |
| QR | RED OAK |
| RAL | REDMOND AMERICAN LINDEN |
| AS | SCHWEDLER MAPLE |

| EVERGREEN TREES | COMMON NAME |
|---|---|
| PN | AUSTRIAN BLACK PINE |
| PSP | LIMBER PINE |
| VAN | VANDERWOLF`S PYRAMID PINE |

| ORNAMENTAL TREES | COMMON NAME |
|---|---|
| AH | HOT WINGS TATARIAN MAPLE |
| AG2 | ROCKY MOUNTAIN MAPLE |

| DECIDUOUS SHRUBS | COMMON NAME |
|---|---|
| SCH | PAWNEE BUTTES SAND CHERRY |
| CB | RED TWIG DOGWOOD |
| PS2 | ROCKY MOUNTAIN PENSTEMON |
| PA | RUSSIAN SAGE |
| SSB | SASKATOON SERVICEBERRY |
| RW | WHITE MEIDILAND ROSE |
| AG | `AUTUMN BRILLIANCE` SERVICEBERRY |

| EVERGREEN SHRUBS | COMMON NAME |
|---|---|
| JB | BLUE CHIP JUNIPER |
| BUJ | BUFFALO JUNIPER |
| AC | MANZANITA |
| PS | MUGO PINE |

| ORNAMENTAL GRASSES | COMMON NAME |
|---|---|
| CK | FEATHER REED GRASS |
| PB2 | LITTLE BUNNY FOUNTAIN GRASS |
| MY | `YAKU JIMA DWARF MAIDEN GRASS |

| GROUND COVERS | COMMON NAME |
|---|---|
| | ENVIROTURF |
| | ROCK MULCH GREY, 4" DIA. COBBLE |
| | ROCK MULCH TAN, 4" DIA. COBBLE |
| | TEMPORARILY IRRIGATED NATIVE SEED MIX |

NOTES:
1. LANDSCAPE MATERIAL AND TREES IN TREE LAWNS ADJACENT TO LOTS ARE RESPONSIBILITY OF HOME BUILDER. STREET TREE LOCATIONS ARE NOT FINAL AND MAY CHANGE BASED UPON DRIVEWAY LOCATION.
2. NO FENCES OR STRUCTURES WILL BE ALLOWED WITHIN SIGHT TRIANGLES.
3. SHRUBS & PERENNIALS WITHIN SIGHT TRIANGLES WILL BE NO HIGHER THAN 2'



KEY MAP

NORTH
0 10' 20' 30' 60'
SCALE: 1"=30'-0"


■ Prepared For■

E5X MANAGEMENT
7353 SOUTH ALTON WAY
CENTENNIAL, CO 80112

■ Land Planning ■

people creating spaces

**pcs group inc.** www.pcsgroupco.com
#3, B-180 Independence plaza
1007 16th street . denver co 80265
t 303.531.4905 . f 303.531.4908

■ Engineering ■

CVL CONSULTANTS
10333 E. DRY CREEK RD. #240
ENGLEWOOD, CO 80112
720-482-9526


# TRAILS AT CROWFOOT
## FILING NO. 9
PARKER, COLORADO

LANDSCAPE PLANS

| | |
|---|---|
| Drawn by: | JWI, BEM, GG |
| Checked by: | PCS STAFF |
| Submittal Date: | 12.08.2017 |
| | 01.26.2017 |
| | 02.20.2018 |
| | 04.6.2018 |
| | 08.10.2018 |

Know what's **below.** **Call** before you dig. 811

■ Sheet Name ■

LANDSCAPE PLAN

■ Sheet Number ■

L1.7

Y:\HESS RANCH\LANDSCAPE ARCHITECTURE\CURRENT DWGS\HESS-LDSCP PLANS - FILING 9.DWG
Thursday, August 10, 2018 - 3:39pm

MATCHLINE - SHEET L1.7

MATCHLINE - SHEET L1.5

MATCHLINE - SHEET L1.13

MATCHLINE - SHEET L1.9

(1)GK

FILING 9 LIMIT OF LANDSCAPE

SIGHT TRI

SIGHT TRI

LANDSCAPE MATERIAL AND TREES IN TREE LAWNS ADJACENT TO LOTS ARE RESPONSIBILITY OF HOME BUILDER AND NOT INCLUDED ON THIS PLAN. LANDSCAPE TO BE INSTALLED AS PART OF FILING 10

(2)QM

(2)OV

(3)BUJ
(6)PB2

ATTACHED WALK, RE: CIVIL PLANS

STREET TREES IN ROW TO BE INSTALLED WITH FILING 9

LIGHTPOLE RE: CIVIL PLANS

SIGHT TRI

LANDSCAPE MATERIAL AND TREES IN TREE LAWNS ADJACENT TO LOTS ARE RESPONSIBILITY OF HOME BUILDER AND NOT INCLUDED ON THIS PLAN. LANDSCAPE IN THIS AREA TO BE INSTALLED AS PART OF FILING 11

SIGHT TRIANGLES

(2)OV

LANDSCAPE WITHIN PARK TO BE DEVELOPED AS PART OF FILING 1 PARK PLANS

FILING 9 LIMIT OF LANDSCAPE

(16)PB2
(5)BUJ

FILING 9 LIMIT OF LANDSCAPE

(1)UP

## PLANT & GROUNDCOVER LIST

| DECIDUOUS TREES | COMMON NAME |
|---|---|
| UP | AMERICAN ELM |
| OV | AMERICAN HORNBEAM |
| PO | AMERICAN SYCAMORE |
| QM | BURR OAK |
| QM2 | CHINKAPIN OAK |
| HAC | COMMON HACKBERRY |
| AE | EMERALD QUEEN MAPLE |
| TG2 | GLENLEVEN LITTLELEAF LINDEN |
| TG | GREENSPIRE LITTLELEAF LINDEN |
| QC | HERITAGE OAK |
| GI | IMPERIAL HONEYLOCUST |
| GK | KENTUCKY COFFEE TREE |
| QR | RED OAK |
| RAL | REDMOND AMERICAN LINDEN |
| AS | SCHWEDLER MAPLE |

| EVERGREEN TREES | COMMON NAME |
|---|---|
| PN | AUSTRIAN BLACK PINE |
| PSP | LIMBER PINE |
| VAN | VANDERWOLF`S PYRAMID PINE |

| ORNAMENTAL TREES | COMMON NAME |
|---|---|
| AH | HOT WINGS TATARIAN MAPLE |
| AG2 | ROCKY MOUNTAIN MAPLE |

| DECIDUOUS SHRUBS | COMMON NAME |
|---|---|
| SCH | PAWNEE BUTTES SAND CHERRY |
| CB | RED TWIG DOGWOOD |
| PS2 | ROCKY MOUNTAIN PENSTEMON |
| PA | RUSSIAN SAGE |
| SSB | SASKATOON SERVICEBERRY |
| RW | WHITE MEIDILAND ROSE |
| AG | `AUTUMN BRILLIANCE` SERVICEBERRY |

| EVERGREEN SHRUBS | COMMON NAME |
|---|---|
| JB | BLUE CHIP JUNIPER |
| BUJ | BUFFALO JUNIPER |
| AC | MANZANITA |
| PS | MUGO PINE |

| ORNAMENTAL GRASSES | COMMON NAME |
|---|---|
| CK | FEATHER REED GRASS |
| PB2 | LITTLE BUNNY FOUNTAIN GRASS |
| MY | YAKU JIMA DWARF MAIDEN GRASS |

| GROUND COVERS | COMMON NAME |
|---|---|
| | ENVIROTURF |
| | ROCK MULCH GREY, 4" DIA. COBBLE |
| | ROCK MULCH TAN, 4" DIA. COBBLE |
| | TEMPORARILY IRRIGATED NATIVE SEED MIX |

NOTES:
1. LANDSCAPE MATERIAL AND TREES IN TREE LAWNS ADJACENT TO LOTS ARE RESPONSIBILITY OF HOME BUILDER. STREET TREE LOCATIONS ARE NOT FINAL AND MAY CHANGE BASED UPON DRIVEWAY LOCATION.
2. NO FENCES OR STRUCTURES WILL BE ALLOWED WITHIN SIGHT TRIANGLES.
3. SHRUBS & PERENNIALS WITHIN SIGHT TRIANGLES WILL BE NO HIGHER THAN 2'



KEY MAP

NORTH

0 10' 20' 30' 60'

SCALE: 1"=30'-0"


■ Prepared For■

E5X MANAGEMENT
7353 SOUTH ALTON WAY
CENTENNIAL, CO 80112

■ Land Planning ■

people creating spaces

**pcs group inc.** www.pcsgroupco.com
#3, B-180 Independence plaza
1007 16th street . denver co 80265
t 303.531.4905 . f 303.531.4908

■ Engineering ■

CVL CONSULTANTS
10333 E. DRY CREEK RD. #240
ENGLEWOOD, CO 80112
720-482-9526


# TRAILS AT CROWFOOT
## FILING NO. 9
PARKER, COLORADO

LANDSCAPE PLANS

| | |
|---|---|
| Drawn by: | JWI, BEM, GG |
| Checked by: | PCS STAFF |
| Submittal Date: | 12.08.2017 |
| | 01.26.2017 |
| | 02.20.2018 |
| | 04.6.2018 |
| | 08.10.2018 |

Know what's **below.** **Call** before you dig. 811

■ Sheet Name ■

LANDSCAPE PLAN

■ Sheet Number ■

L1.8

Y:\HESS RANCH\LANDSCAPE ARCHITECTURE\CURRENT DWGS\HESS-LDSCP PLANS - FILING 9.DWG

MATCHLINE - SHEET L1.8

MATCHLINE - SHEET L1.4

MATCHLINE - SHEET L1.12

MATCHLINE - SHEET L1.10

(3)GK

ATTACHED WALK, RE: CIVIL PLANS

LIGHTPOLE RE: CIVIL PLANS

(3)UP

(7)BUJ
(2)AS
(15)PB2

SIGHT TRI

(15)PB2
(5)BUJ

LANDSCAPE MATERIAL AND TREES IN TREE LAWNS ADJACENT TO LOTS ARE RESPONSIBILITY OF HOME BUILDER AND NOT INCLUDED ON THIS PLAN. LANDSCAPE TO BE INSTALLED AS PART OF FILING 11

LIGHTPOLE RE: CIVIL PLANS

(15)PB2
(8)BUJ

(3)AS
(12)PB2

SIGHT TRI

LANDSCAPE MATERIAL AND TREES IN TREE LAWNS ADJACENT TO LOTS ARE RESPONSIBILITY OF HOME BUILDER AND NOT INCLUDED ON THIS PLAN. FENCING TO BE INSTALLED AS PART OF FILING 9 AND STREET TREES INSTALLED AS PART OF FILING 11.

OPEN RAIL FENCE 5 L2.0

FILING 9 LIMIT OF LANDSCAPE

LANDSCAPE WITHIN PARK TO BE DEVELOPED AS PART OF FILING 1 PARK PLANS

STREET TREES ALONG SCARLET SAGE AVE. ROW TO BE INSTALLED WITH FILING 9.

PO(4)

ATTACHED WALK, RE: CIVIL PLANS

FILING 9 LIMIT OF LANDSCAPE

LIGHTPOLE RE: CIVIL PLANS

(4)GK
(2)PO

(5)TG2

(2)RAL

FILING 9 LIMIT OF LANDSCAPE

TRACT C

STREET TREES IN THIS AREA TO BE COMPLETED AS PART OF FILING 12

AREAS DISTURBED BY GRADING TO BE SEEDED PER ENGINEERING DRAWINGS

FILING 9 LIMIT OF LANDSCAPE

OPEN RAIL FENCE 5 L2.0

## PLANT & GROUNDCOVER LIST

| DECIDUOUS TREES | COMMON NAME |
|---|---|
| UP | AMERICAN ELM |
| OV | AMERICAN HORNBEAM |
| PO | AMERICAN SYCAMORE |
| QM | BURR OAK |
| QM2 | CHINKAPIN OAK |
| HAC | COMMON HACKBERRY |
| AE | EMERALD QUEEN MAPLE |
| TG2 | GLENLEVEN LITTLELEAF LINDEN |
| TG | GREENSPIRE LITTLELEAF LINDEN |
| QC | HERITAGE OAK |
| GI | IMPERIAL HONEYLOCUST |
| GK | KENTUCKY COFFEE TREE |
| QR | RED OAK |
| RAL | REDMOND AMERICAN LINDEN |
| AS | SCHWEDLER MAPLE |

| EVERGREEN TREES | COMMON NAME |
|---|---|
| PN | AUSTRIAN BLACK PINE |
| PSP | LIMBER PINE |
| VAN | VANDERWOLF`S PYRAMID PINE |

| ORNAMENTAL TREES | COMMON NAME |
|---|---|
| AH | HOT WINGS TATARIAN MAPLE |
| AG2 | ROCKY MOUNTAIN MAPLE |

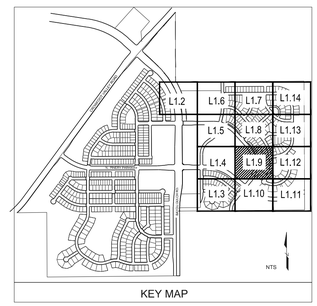
| DECIDUOUS SHRUBS | COMMON NAME |
|---|---|
| SCH | PAWNEE BUTTES SAND CHERRY |
| CB | RED TWIG DOGWOOD |
| PS2 | ROCKY MOUNTAIN PENSTEMON |
| PA | RUSSIAN SAGE |
| SSB | SASKATOON SERVICEBERRY |
| RW | WHITE MEIDILAND ROSE |
| AG | `AUTUMN BRILLIANCE` SERVICEBERRY |

| EVERGREEN SHRUBS | COMMON NAME |
|---|---|
| JB | BLUE CHIP JUNIPER |
| BUJ | BUFFALO JUNIPER |
| AC | MANZANITA |
| PS | MUGO PINE |

| ORNAMENTAL GRASSES | COMMON NAME |
|---|---|
| CK | FEATHER REED GRASS |
| PB2 | LITTLE BUNNY FOUNTAIN GRASS |
| MY | `YAKU JIMA DWARF MAIDEN GRASS |

| GROUND COVERS | COMMON NAME |
|---|---|
| | ENVIROTURF |
| | ROCK MULCH GREY, 4" DIA. COBBLE |
| | ROCK MULCH TAN, 4" DIA. COBBLE |
| | TEMPORARILY IRRIGATED NATIVE SEED MIX |

NOTES:
1. LANDSCAPE MATERIAL AND TREES IN TREE LAWNS ADJACENT TO LOTS ARE RESPONSIBILITY OF HOME BUILDER. STREET TREE LOCATIONS ARE NOT FINAL AND MAY CHANGE BASED UPON DRIVEWAY LOCATION.
2. NO FENCES OR STRUCTURES WILL BE ALLOWED WITHIN SIGHT TRIANGLES.
3. SHRUBS & PERENNIALS WITHIN SIGHT TRIANGLES WILL BE NO HIGHER THAN 2'



KEY MAP

NORTH
0 10' 20' 30' 60'
SCALE: 1"=30'-0"


■ Prepared For■

E5X MANAGEMENT
7353 SOUTH ALTON WAY
CENTENNIAL, CO 80112

■ Land Planning ■

people creating spaces

pcs group inc. www.pcsgroupco.com
#3, B-180 Independence plaza
1007 16th street . denver co 80265
t 303.531.4905 . f 303.531.4908

■ Engineering ■

CVL CONSULTANTS
10333 E. DRY CREEK RD. #240
ENGLEWOOD, CO 80112
720-482-9526


# TRAILS AT CROWFOOT
FILING NO. 9
PARKER, COLORADO

LANDSCAPE PLANS

| | |
|---|---|
| Drawn by: | JWI, BEM, GG |
| Checked by: | PCS STAFF |
| Submittal Date: | 12.08.2017 |
| | 01.26.2017 |
| Know what's below. Call before you dig. | 02.20.2018 |
| | 04.6.2018 |
| | 08.10.2018 |

■ Sheet Name ■

LANDSCAPE PLAN

■ Sheet Number ■

L1.9


Y:\HESS RANCH\LANDSCAPE ARCHITECTURE\CURRENT DWGS\HESS-LDSCP PLANS - FILING 9.DWG

MATCHLINE - SHEET L1.9

MATCHLINE - SHEET L1.3

MATCHLINE - SHEET L1.11

LANDSCAPE WITHIN PARK TO BE DEVELOPED AS PART OF FILING 1 PARK PLANS

(1)GK
RAL(1)
(4)AC
(1)GK
QC(3)

LIGHTPOLE RE: CIVIL PLANS

FILING 9 LIMIT OF LANDSCAPE AT ROW

(3)GI

(3)QR

MY(39)
AG(6)
PN(3)

PB2(10)
SCH(6)
AC(7)
JB(4)
CB(4)

(4)JB
(12)PB2

(11)PB2

STEEL EDGER 4 L2.0

(3)AG2

TEMPORARILY IRRIGATED NATIVE SEED MIX FOR AREAS DISTURBED BY GRADING

(2)PO

GI(1)
OPEN RAIL FENCE 5 L2.0

(3)JB
(4)CB
(8)AC
(5)SCH

SIGHT TRI

TERTIARY MONUMENT TO BE INSTALLED IN FILING 13

AG2(3)

LIGHTPOLE, RE: CIVIL PLANS
(4)JB
(12)PB2

(2)PSP

FILING 9 LIMIT OF LANDSCAPE

CB(3)
AC(7)
SCH(6)

STEEL EDGER 4 L2.0

(37)PB2
(12)SSB
(18)MY
(11)JB

STEEL EDGER 4 L2.0

(2)PO

(3)VAN

TEMPORARILY IRRIGATED NATIVE SEED MIX FOR AREAS DISTURBED BY GRADING

LIGHTPOLE RE: CIVIL PLANS

(7)BUJ

(12)CK
(6)RW

LIGHTPOLE RE: CIVIL PLANS

(2)TG

PS(9)

(9)PS
(5)PA
(9)BUJ
(9)SCH

TG2(2)

(3)VAN

(2)VAN

QR(3)

AC(16)
MY(64)
AG(12)

LIGHTPOLE RE: CIVIL PLANS

SIGHT TRI

UNDISTURBED AREA

(1)HAC

(5)UP

QM2(6)

TG(4)

AG2(3)

LIGHTPOLE RE: CIVIL PLANS

BUJ(3)
SCH(4)
PS(9)

LANDSCAPE BOULDER 6 L2.0

(3)AS
BUJ(8)

LIGHTPOLE RE: CIVIL PLANS

CK(11)
RW(9)

PA(5)

FILING 9 LIMIT OF LANDSCAPE

LIGHTPOLE RE: CIVIL PLANS

UP(5)

(2)QC

FILING 9 LIMIT OF LANDSCAPE

UNDISTURBED AREA

TRACT H

(3)HAC

5 L2.0 OPEN RAIL FENCE

FILING 9 LIMIT OF LANDSCAPE

5 L2.0 OPEN RAIL FENCE

A 3

B 3

A 1 4

A 5

## PLANT & GROUNDCOVER LIST

| DECIDUOUS TREES | COMMON NAME |
|---|---|
| UP | AMERICAN ELM |
| OV | AMERICAN HORNBEAM |
| PO | AMERICAN SYCAMORE |
| QM | BURR OAK |
| QM2 | CHINKAPIN OAK |
| HAC | COMMON HACKBERRY |
| AE | EMERALD QUEEN MAPLE |
| TG2 | GLENLEVEN LITTLELEAF LINDEN |
| TG | GREENSPIRE LITTLELEAF LINDEN |
| QC | HERITAGE OAK |
| GI | IMPERIAL HONEYLOCUST |
| GK | KENTUCKY COFFEE TREE |
| QR | RED OAK |
| RAL | REDMOND AMERICAN LINDEN |
| AS | SCHWEDLER MAPLE |

| EVERGREEN TREES | COMMON NAME |
|---|---|
| PN | AUSTRIAN BLACK PINE |
| PSP | LIMBER PINE |
| VAN | VANDERWOLF`S PYRAMID PINE |

| ORNAMENTAL TREES | COMMON NAME |
|---|---|
| AH | HOT WINGS TATARIAN MAPLE |
| AG2 | ROCKY MOUNTAIN MAPLE |

| DECIDUOUS SHRUBS | COMMON NAME |
|---|---|
| SCH | PAWNEE BUTTES SAND CHERRY |
| CB | RED TWIG DOGWOOD |
| PS2 | ROCKY MOUNTAIN PENSTEMON |
| PA | RUSSIAN SAGE |
| SSB | SASKATOON SERVICEBERRY |
| RW | WHITE MEIDILAND ROSE |
| AG | `AUTUMN BRILLIANCE` SERVICEBERRY |

| EVERGREEN SHRUBS | COMMON NAME |
|---|---|
| JB | BLUE CHIP JUNIPER |
| BUJ | BUFFALO JUNIPER |
| AC | MANZANITA |
| PS | MUGO PINE |

| ORNAMENTAL GRASSES | COMMON NAME |
|---|---|
| CK | FEATHER REED GRASS |
| PB2 | LITTLE BUNNY FOUNTAIN GRASS |
| MY | YAKU JIMA DWARF MAIDEN GRASS |

| GROUND COVERS | COMMON NAME |
|---|---|
| | ENVIROTURF |
| | ROCK MULCH GREY, 4" DIA. COBBLE |
| | ROCK MULCH TAN, 4" DIA. COBBLE |
| | TEMPORARILY IRRIGATED NATIVE SEED MIX |

NOTES:
1. LANDSCAPE MATERIAL AND TREES IN TREE LAWNS ADJACENT TO LOTS ARE RESPONSIBILITY OF HOME BUILDER. STREET TREE LOCATIONS ARE NOT FINAL AND MAY CHANGE BASED UPON DRIVEWAY LOCATION.
2. NO FENCES OR STRUCTURES WILL BE ALLOWED WITHIN SIGHT TRIANGLES.
3. SHRUBS & PERENNIALS WITHIN SIGHT TRIANGLES WILL BE NO HIGHER THAN 2'




KEY MAP

NORTH

0 10' 20' 30' 60'

SCALE: 1"=30'-0"


■ Prepared For■

E5X MANAGEMENT
7353 SOUTH ALTON WAY
CENTENNIAL, CO 80112

■ Land Planning ■

people creating spaces

pcs group inc. www.pcsgroupco.com
#3, B-180 Independence plaza
1007 16th street . denver co 80265
t 303.531.4905 . f 303.531.4908

■ Engineering ■

CVL CONSULTANTS
10333 E. DRY CREEK RD. #240
ENGLEWOOD, CO 80112
720-482-9526


# TRAILS AT CROWFOOT
FILING NO. 9
PARKER, COLORADO
LANDSCAPE PLANS

| | |
|---|---|
| Drawn by: | JWI, BEM, GG |
| Checked by: | PCS STAFF |
| Submittal Date: | 12.08.2017 |
| | 01.26.2017 |
| | 02.20.2018 |
| | 04.6.2018 |
| | 08.10.2018 |

Know what's below. Call before you dig. 811

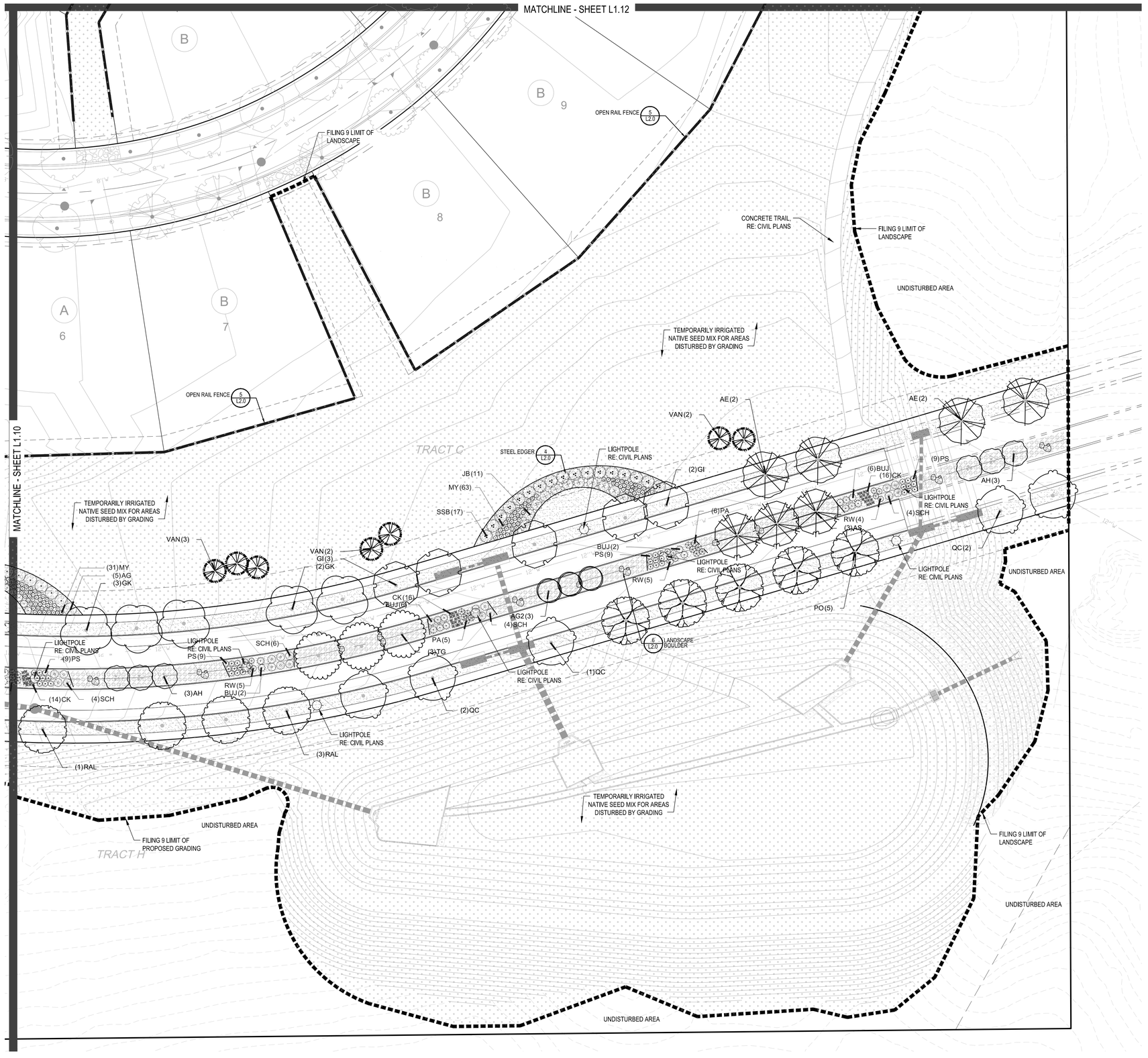
■ Sheet Name ■

LANDSCAPE PLAN

■ Sheet Number ■

L1.10

Y:\HESS RANCH\LANDSCAPE ARCHITECTURE\CURRENT DWGS\HESS-LDSCP PLANS - FILING 9.DWG




## PLANT & GROUNDCOVER LIST

| DECIDUOUS TREES | COMMON NAME |
|---|---|
| UP | AMERICAN ELM |
| OV | AMERICAN HORNBEAM |
| PO | AMERICAN SYCAMORE |
| QM | BURR OAK |
| QM2 | CHINKAPIN OAK |
| HAC | COMMON HACKBERRY |
| AE | EMERALD QUEEN MAPLE |
| TG2 | GLENLEVEN LITTLELEAF LINDEN |
| TG | GREENSPIRE LITTLELEAF LINDEN |
| QC | HERITAGE OAK |
| GI | IMPERIAL HONEYLOCUST |
| GK | KENTUCKY COFFEE TREE |
| QR | RED OAK |
| RAL | REDMOND AMERICAN LINDEN |
| AS | SCHWEDLER MAPLE |

| EVERGREEN TREES | COMMON NAME |
|---|---|
| PN | AUSTRIAN BLACK PINE |
| PSP | LIMBER PINE |
| VAN | VANDERWOLF`S PYRAMID PINE |

| ORNAMENTAL TREES | COMMON NAME |
|---|---|
| AH | HOT WINGS TATARIAN MAPLE |
| AG2 | ROCKY MOUNTAIN MAPLE |

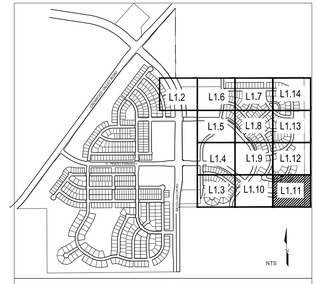
| DECIDUOUS SHRUBS | COMMON NAME |
|---|---|
| SCH | PAWNEE BUTTES SAND CHERRY |
| CB | RED TWIG DOGWOOD |
| PS2 | ROCKY MOUNTAIN PENSTEMON |
| PA | RUSSIAN SAGE |
| SSB | SASKATOON SERVICEBERRY |
| RW | WHITE MEIDILAND ROSE |
| AG | `AUTUMN BRILLIANCE` SERVICEBERRY |

| EVERGREEN SHRUBS | COMMON NAME |
|---|---|
| JB | BLUE CHIP JUNIPER |
| BUJ | BUFFALO JUNIPER |
| AC | MANZANITA |
| PS | MUGO PINE |

| ORNAMENTAL GRASSES | COMMON NAME |
|---|---|
| CK | FEATHER REED GRASS |
| PB2 | LITTLE BUNNY FOUNTAIN GRASS |
| MY | YAKU JIMA DWARF MAIDEN GRASS |

| GROUND COVERS | COMMON NAME |
|---|---|
| | ENVIROTURF |
| | ROCK MULCH GREY, 4" DIA. COBBLE |
| | ROCK MULCH TAN, 4" DIA. COBBLE |
| | TEMPORARILY IRRIGATED NATIVE SEED MIX |

NOTES:
1. LANDSCAPE MATERIAL AND TREES IN TREE LAWNS ADJACENT TO LOTS ARE RESPONSIBILITY OF HOME BUILDER. STREET TREE LOCATIONS ARE NOT FINAL AND MAY CHANGE BASED UPON DRIVEWAY LOCATION.
2. NO FENCES OR STRUCTURES WILL BE ALLOWED WITHIN SIGHT TRIANGLES.
3. SHRUBS & PERENNIALS WITHIN SIGHT TRIANGLES WILL BE NO HIGHER THAN 2'.



KEY MAP

NORTH
0 10' 20' 30' 60'
SCALE: 1"=30'-0"

■ Prepared For■

E5X MANAGEMENT
7353 SOUTH ALTON WAY
CENTENNIAL, CO 80112

■ Land Planning ■

people creating spaces
pcs group inc. www.pcsgroupco.com
#3, B-180 Independence plaza
1007 16th street . denver co 80265
t 303.531.4905 . f 303.531.4908

■ Engineering ■

CVL CONSULTANTS
10333 E. DRY CREEK RD. #240
ENGLEWOOD, CO 80112
720-482-9526

# TRAILS AT CROWFOOT
FILING NO. 9
PARKER, COLORADO
LANDSCAPE PLANS

| | |
|---|---|
| Drawn by: | JWI, BEM, GG |
| Checked by: | PCS STAFF |
| Submittal Date: | 12.08.2017 |
| | 01.26.2017 |
| | 02.20.2018 |
| | 04.6.2018 |
| | 08.10.2018 |

Know what's below. Call before you dig. 811

■ Sheet Name ■

LANDSCAPE PLAN

■ Sheet Number ■

L1.11

Y:\HESS RANCH\LANDSCAPE ARCHITECTURE\CURRENT DWGS\HESS-LDSCP PLANS - FILING 9.DWG
8/10/2018 10:41:41 AM

MATCHLINE - SHEET L1.13

MATCHLINE - SHEET L1.9

MATCHLINE - SHEET L1.11

STREETSCAPE IN THIS AREA TO BE COMPLETED AS PART OF FILING 11

TEMPORARILY IRRIGATED NATIVE SEED MIX FOR AREAS DISTURBED BY GRADING

OPEN RAIL FENCE 5 L2.0

FILING 9 LIMIT OF LANDSCAPE

FILING 9 PROPOSED GRADING

10' CONCRETE REGIONAL TRAIL RE: CIVIL PLANS

TEMPORARILY IRRIGATED NATIVE SEED MIX FOR AREAS DISTURBED BY GRADING

STREETSCAPE IN THIS AREA TO BE COMPLETED AS PART OF FILING 12

TEMPORARILY IRRIGATED NATIVE SEED MIX FOR AREAS DISTURBED BY GRADING

TRACT J

UNDISTURBED AREA

AREAS DISTURBED BY GRADING TO BE SEEDED PER ENGINEERING DRAWINGS

## PLANT & GROUNDCOVER LIST

| DECIDUOUS TREES | COMMON NAME |
|---|---|
| UP | AMERICAN ELM |
| OV | AMERICAN HORNBEAM |
| PO | AMERICAN SYCAMORE |
| QM | BURR OAK |
| QM2 | CHINKAPIN OAK |
| HAC | COMMON HACKBERRY |
| AE | EMERALD QUEEN MAPLE |
| TG2 | GLENLEVEN LITTLELEAF LINDEN |
| TG | GREENSPIRE LITTLELEAF LINDEN |
| QC | HERITAGE OAK |
| GI | IMPERIAL HONEYLOCUST |
| GK | KENTUCKY COFFEE TREE |
| QR | RED OAK |
| RAL | REDMOND AMERICAN LINDEN |
| AS | SCHWEDLER MAPLE |

| EVERGREEN TREES | COMMON NAME |
|---|---|
| PN | AUSTRIAN BLACK PINE |
| PSP | LIMBER PINE |
| VAN | VANDERWOLF`S PYRAMID PINE |

| ORNAMENTAL TREES | COMMON NAME |
|---|---|
| AH | HOT WINGS TATARIAN MAPLE |
| AG2 | ROCKY MOUNTAIN MAPLE |

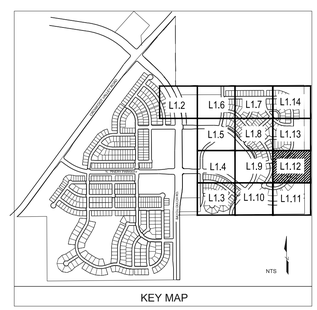
| DECIDUOUS SHRUBS | COMMON NAME |
|---|---|
| SCH | PAWNEE BUTTES SAND CHERRY |
| CB | RED TWIG DOGWOOD |
| PS2 | ROCKY MOUNTAIN PENSTEMON |
| PA | RUSSIAN SAGE |
| SSB | SASKATOON SERVICEBERRY |
| RW | WHITE MEIDILAND ROSE |
| AG | `AUTUMN BRILLIANCE` SERVICEBERRY |

| EVERGREEN SHRUBS | COMMON NAME |
|---|---|
| JB | BLUE CHIP JUNIPER |
| BUJ | BUFFALO JUNIPER |
| AC | MANZANITA |
| PS | MUGO PINE |

| ORNAMENTAL GRASSES | COMMON NAME |
|---|---|
| CK | FEATHER REED GRASS |
| PB2 | LITTLE BUNNY FOUNTAIN GRASS |
| MY | YAKU JIMA DWARF MAIDEN GRASS |

| GROUND COVERS | COMMON NAME |
|---|---|
| | ENVIROTURF |
| | ROCK MULCH GREY, 4" DIA. COBBLE |
| | ROCK MULCH TAN, 4" DIA. COBBLE |
| | TEMPORARILY IRRIGATED NATIVE SEED MIX |

NOTES:
1. LANDSCAPE MATERIAL AND TREES IN TREE LAWNS ADJACENT TO LOTS ARE RESPONSIBILITY OF HOME BUILDER. STREET TREE LOCATIONS ARE NOT FINAL AND MAY CHANGE BASED UPON DRIVEWAY LOCATION.
2. NO FENCES OR STRUCTURES WILL BE ALLOWED WITHIN SIGHT TRIANGLES.
3. SHRUBS & PERENNIALS WITHIN SIGHT TRIANGLES WILL BE NO HIGHER THAN 2'



KEY MAP

NORTH 0 10' 20' 30' 60' SCALE: 1"=30'-0"


■ Prepared For■

E5X MANAGEMENT
7353 SOUTH ALTON WAY
CENTENNIAL, CO 80112

■ Land Planning ■

people creating spaces
pcs group inc. www.pcsgroupco.com
#3, B-180 Independence plaza
1007 16th street . denver co 80265
t 303.531.4905 . f 303.531.4908

■ Engineering ■

CVL CONSULTANTS
10333 E. DRY CREEK RD. #240
ENGLEWOOD, CO 80112
720-482-9526


# TRAILS AT CROWFOOT
FILING NO. 9
PARKER, COLORADO
LANDSCAPE PLANS

| | |
|---|---|
| Drawn by: | JWI, BEM, GG |
| Checked by: | PCS STAFF |
| Submittal Date: | 12.08.2017 |
| | 01.26.2017 |
| | 02.20.2018 |
| | 04.6.2018 |
| | 08.10.2018 |

Know what's **below.** **Call** before you dig. 811

■ Sheet Name ■

LANDSCAPE PLAN

■ Sheet Number ■

L1.12


Y:\HESS RANCH\LANDSCAPE ARCHITECTURE\CURRENT DWGS\HESS-LDSCP PLANS - FILING 9.DWG

MATCHLINE - SHEET L1.14

MATCHLINE - SHEET L1.8

MATCHLINE - SHEET L1.12

FILING 10

FILING 11

5 L2.0 OPEN RAIL FENCE

10' CONCRETE REGIONAL TRAIL RE: CIVIL PLANS

TEMPORARILY IRRIGATED NATIVE SEED MIX FOR AREAS DISTURBED BY GRADING

UNDISTURBED AREA

FILING 9 LIMIT PROPOSED GRADING

TEMPORARILY IRRIGATED NATIVE SEED MIX FOR AREAS DISTURBED BY GRADING

FILING 9 LIMIT OF LANDSCAPE

STREETSCAPE IN THIS AREA TO BE COMPLETED AS PART OF FILING 11

TRACT C

TEMPORARILY IRRIGATED NATIVE SEED MIX FOR AREAS DISTURBED BY GRADING

## PLANT & GROUNDCOVER LIST

| DECIDUOUS TREES | COMMON NAME |
|---|---|
| UP | AMERICAN ELM |
| OV | AMERICAN HORNBEAM |
| PO | AMERICAN SYCAMORE |
| QM | BURR OAK |
| QM2 | CHINKAPIN OAK |
| HAC | COMMON HACKBERRY |
| AE | EMERALD QUEEN MAPLE |
| TG2 | GLENLEVEN LITTLELEAF LINDEN |
| TG | GREENSPIRE LITTLELEAF LINDEN |
| QC | HERITAGE OAK |
| GI | IMPERIAL HONEYLOCUST |
| GK | KENTUCKY COFFEE TREE |
| QR | RED OAK |
| RAL | REDMOND AMERICAN LINDEN |
| AS | SCHWEDLER MAPLE |

| EVERGREEN TREES | COMMON NAME |
|---|---|
| PN | AUSTRIAN BLACK PINE |
| PSP | LIMBER PINE |
| VAN | VANDERWOLF`S PYRAMID PINE |

| ORNAMENTAL TREES | COMMON NAME |
|---|---|
| AH | HOT WINGS TATARIAN MAPLE |
| AG2 | ROCKY MOUNTAIN MAPLE |

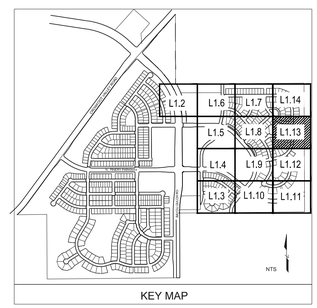
| DECIDUOUS SHRUBS | COMMON NAME |
|---|---|
| SCH | PAWNEE BUTTES SAND CHERRY |
| CB | RED TWIG DOGWOOD |
| PS2 | ROCKY MOUNTAIN PENSTEMON |
| PA | RUSSIAN SAGE |
| SSB | SASKATOON SERVICEBERRY |
| RW | WHITE MEIDILAND ROSE |
| AG | `AUTUMN BRILLIANCE` SERVICEBERRY |

| EVERGREEN SHRUBS | COMMON NAME |
|---|---|
| JB | BLUE CHIP JUNIPER |
| BUJ | BUFFALO JUNIPER |
| AC | MANZANITA |
| PS | MUGO PINE |

| ORNAMENTAL GRASSES | COMMON NAME |
|---|---|
| CK | FEATHER REED GRASS |
| PB2 | LITTLE BUNNY FOUNTAIN GRASS |
| MY | YAKU JIMA DWARF MAIDEN GRASS |

| GROUND COVERS | COMMON NAME |
|---|---|
| | ENVIROTURF |
| | ROCK MULCH GREY, 4" DIA. COBBLE |
| | ROCK MULCH TAN, 4" DIA. COBBLE |
| | TEMPORARILY IRRIGATED NATIVE SEED MIX |

NOTES:
1. LANDSCAPE MATERIAL AND TREES IN TREE LAWNS ADJACENT TO LOTS ARE RESPONSIBILITY OF HOME BUILDER. STREET TREE LOCATIONS ARE NOT FINAL AND MAY CHANGE BASED UPON DRIVEWAY LOCATION.
2. NO FENCES OR STRUCTURES WILL BE ALLOWED WITHIN SIGHT TRIANGLES.
3. SHRUBS & PERENNIALS WITHIN SIGHT TRIANGLES WILL BE NO HIGHER THAN 2'



KEY MAP

NORTH 0 10' 20' 30' 60'
SCALE: 1"=30'-0"


■ Prepared For■

E5X MANAGEMENT
7353 SOUTH ALTON WAY
CENTENNIAL, CO 80112

■ Land Planning ■

people creating spaces
pcs group inc. www.pcsgroupco.com
#3, B-180 Independence plaza
1007 16th street . denver co 80265
t 303.531.4905 . f 303.531.4908

■ Engineering ■

CVL CONSULTANTS
10333 E. DRY CREEK RD. #240
ENGLEWOOD, CO 80112
720-482-9526


# TRAILS AT CROWFOOT
FILING NO. 9
PARKER, COLORADO
LANDSCAPE PLANS

| | |
|---|---|
| Drawn by: | JWI, BEM, GG |
| Checked by: | PCS STAFF |
| Submittal Date: | 12.08.2017 |
| | 01.26.2017 |
| | 02.20.2018 |
| | 04.6.2018 |
| | 08.10.2018 |

Know what's **below.** **Call** before you dig. 811

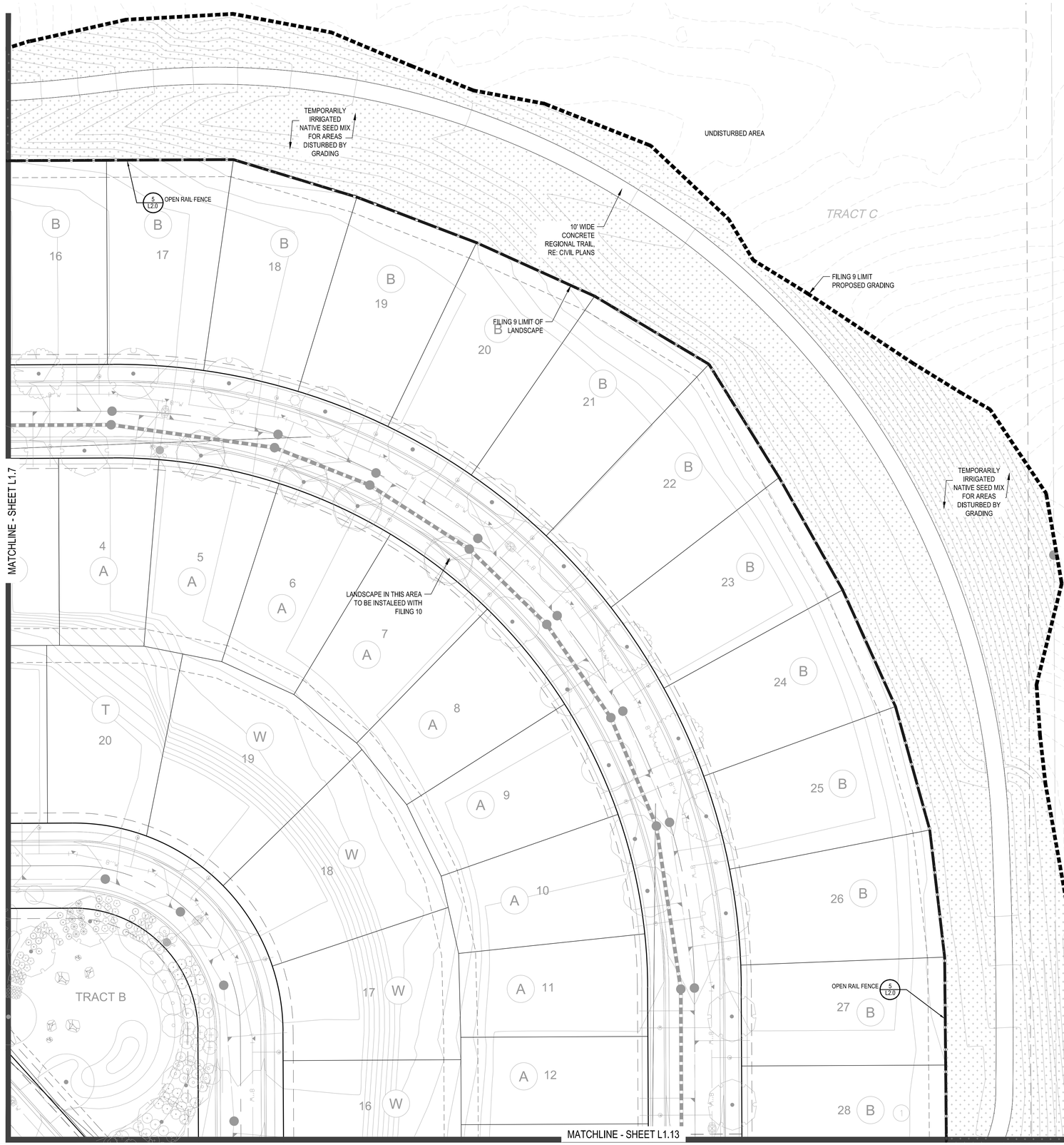
■ Sheet Name ■

LANDSCAPE PLAN

■ Sheet Number ■

L1.13

Y:\HESS RANCH\LANDSCAPE ARCHITECTURE\CURRENT DWGS\HESS-LDSCP PLANS - FILING 9.DWG
Tuesday, August 14, 2018 - 10:39am




## PLANT & GROUNDCOVER LIST

| DECIDUOUS TREES | COMMON NAME |
|---|---|
| UP | AMERICAN ELM |
| OV | AMERICAN HORNBEAM |
| PO | AMERICAN SYCAMORE |
| QM | BURR OAK |
| QM2 | CHINKAPIN OAK |
| HAC | COMMON HACKBERRY |
| AE | EMERALD QUEEN MAPLE |
| TG2 | GLENLEVEN LITTLELEAF LINDEN |
| TG | GREENSPIRE LITTLELEAF LINDEN |
| QC | HERITAGE OAK |
| GI | IMPERIAL HONEYLOCUST |
| GK | KENTUCKY COFFEE TREE |
| QR | RED OAK |
| RAL | REDMOND AMERICAN LINDEN |
| AS | SCHWEDLER MAPLE |

| EVERGREEN TREES | COMMON NAME |
|---|---|
| PN | AUSTRIAN BLACK PINE |
| PSP | LIMBER PINE |
| VAN | VANDERWOLF`S PYRAMID PINE |

| ORNAMENTAL TREES | COMMON NAME |
|---|---|
| AH | HOT WINGS TATARIAN MAPLE |
| AG2 | ROCKY MOUNTAIN MAPLE |

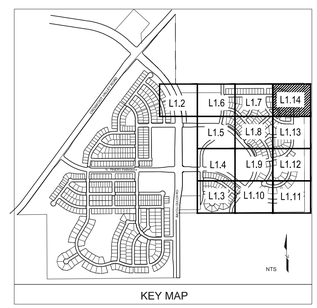
| DECIDUOUS SHRUBS | COMMON NAME |
|---|---|
| SCH | PAWNEE BUTTES SAND CHERRY |
| CB | RED TWIG DOGWOOD |
| PS2 | ROCKY MOUNTAIN PENSTEMON |
| PA | RUSSIAN SAGE |
| SSB | SASKATOON SERVICEBERRY |
| RW | WHITE MEIDILAND ROSE |
| AG | `AUTUMN BRILLIANCE` SERVICEBERRY |

| EVERGREEN SHRUBS | COMMON NAME |
|---|---|
| JB | BLUE CHIP JUNIPER |
| BUJ | BUFFALO JUNIPER |
| AC | MANZANITA |
| PS | MUGO PINE |

| ORNAMENTAL GRASSES | COMMON NAME |
|---|---|
| CK | FEATHER REED GRASS |
| PB2 | LITTLE BUNNY FOUNTAIN GRASS |
| MY | `YAKU JIMA DWARF MAIDEN GRASS |

| GROUND COVERS | COMMON NAME |
|---|---|
| | ENVIROTURF |
| | ROCK MULCH GREY, 4" DIA. COBBLE |
| | ROCK MULCH TAN, 4" DIA. COBBLE |
| | TEMPORARILY IRRIGATED NATIVE SEED MIX |

NOTES:
1. LANDSCAPE MATERIAL AND TREES IN TREE LAWNS ADJACENT TO LOTS ARE RESPONSIBILITY OF HOME BUILDER. STREET TREE LOCATIONS ARE NOT FINAL AND MAY CHANGE BASED UPON DRIVEWAY LOCATION.
2. NO FENCES OR STRUCTURES WILL BE ALLOWED WITHIN SIGHT TRIANGLES.
3. SHRUBS & PERENNIALS WITHIN SIGHT TRIANGLES WILL BE NO HIGHER THAN 2'




KEY MAP

NORTH 0 10' 20' 30' 60' SCALE: 1"=30'-0"

■ Prepared For■

E5X MANAGEMENT
7353 SOUTH ALTON WAY
CENTENNIAL, CO 80112

■ Land Planning ■

people creating spaces

pcs group inc. www.pcsgroupco.com
#3, B-180 Independence plaza
1007 16th street . denver co 80265
t 303.531.4905 . f 303.531.4908

■ Engineering ■

CVL CONSULTANTS
10333 E. DRY CREEK RD. #240
ENGLEWOOD, CO 80112
720-482-9526

# TRAILS AT CROWFOOT
## FILING NO. 9
PARKER, COLORADO
LANDSCAPE PLANS

| | |
|---|---|
| Drawn by: | JWI, BEM, GG |
| Checked by: | PCS STAFF |
| Submittal Date: | 12.08.2017 |
| | 01.26.2017 |
| | 02.20.2018 |
| | 04.6.2018 |
| | 08.10.2018 |

Know what's below. Call before you dig. 811

■ Sheet Name ■

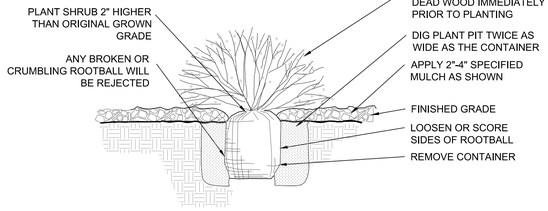
LANDSCAPE PLAN

■ Sheet Number ■

L1.14

Y:\HESS RANCH\LANDSCAPE ARCHITECTURE\CURRENT DWGS\HESS-LDSCP PLANS - FILING 9.DWG

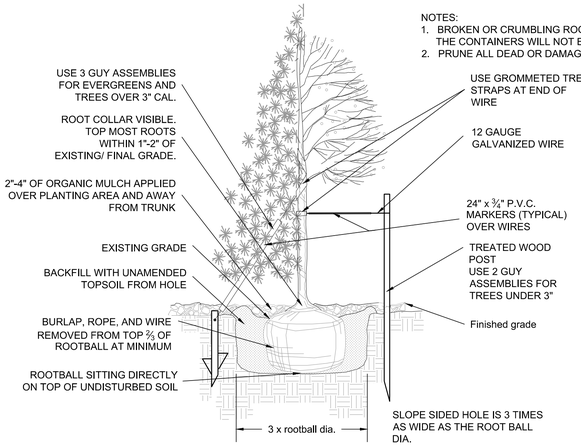
NOTES:
1. BACKFILL AND WATER-IN THOROUGHLY.
2. BROKEN OR CRUMBLING ROOTBALLS WILL BE REJECTED. REMOVING THE CONTAINERS WILL NOT BE AN EXCUSE FOR DAMAGED ROOTBALLS




## 1 SHRUB PLANTING

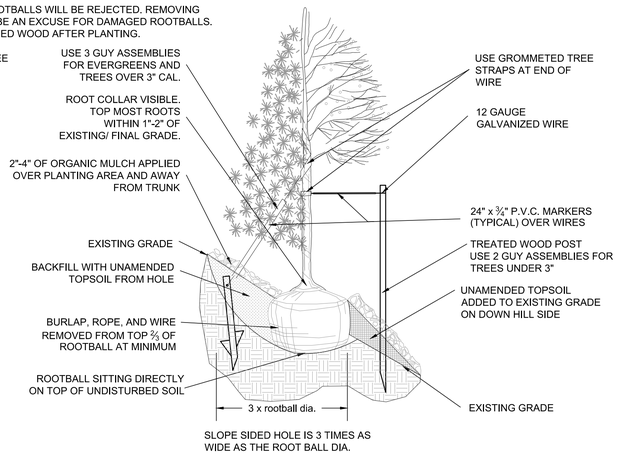
NOT TO SCALE

NOTES:
1. BROKEN OR CRUMBLING ROOTBALLS WILL BE REJECTED. REMOVING THE CONTAINERS WILL NOT BE AN EXCUSE FOR DAMAGED ROOTBALLS.
2. PRUNE ALL DEAD OR DAMAGED WOOD AFTER PLANTING.

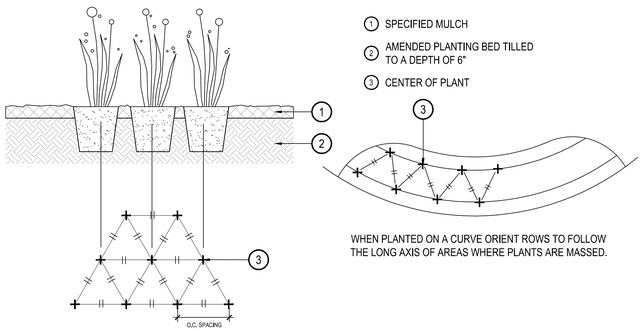



## 2 TREE PLANTING

NOT TO SCALE




**NOTES:**
1. ALL WORK TO BE DONE AT TIME OF PLANTING
2. PEEL BACK ONLY TOP OF BURLAP REQUIRED TO PERFORM WORK. REPLACE BURLAP BEFORE MOVING TREE INTO PLANTING PIT. DO NOT REMOVE WIRE BASKET UNTIL INSIDE PLANTING PIT.
3. MEASURE NEW HEIGHT OF ROOTBALL AND DIG PLANTING PIT SO FINAL TOP ROOTBALL GRADE IS 3" ABOVE FINAL GRADE SURROUNDING BALL.
4. EXCAVATE PLANTING HOLES WITH SLOPING SIDES. MAKE EXCAVATIONS AT LEAST THREE TIMES AS WIDE AS THE ROOT BALL DIAMETER AND NO DEEPER THAN THE DISTANCE FROM THE TOP MOST ROOTS IN THE ROOT BALL TO THE BOTTOM OF THE ROOT BALL TO ALLOW FOR SETTLING. DO NOT DISTURB SOIL AT BOTTOM OF PLANTING HOLES, BUT DO SCORE THE SIDES OF THE PLANTING HOLE. THE PLANTING AREA SHALL BE LOOSENED AND AERATED AT LEAST THREE TIMES THE DIAMETER OF THE ROOT BALL. BACKFILL SHALL CONSIST OF EXISTING SITE TOPSOIL - NO AMENDMENTS SHALL BE USED UNLESS OTHERWISE SPECIFIED.
5. TREES SHALL BE PLANTED WITH THE ROOT COLLAR/FLARE VISIBLE ABOVE GRADE AND TWO OR MORE STRUCTURAL ROOTS LOCATED WITHIN THE TOP 1" TO 2" OF THE ROOT BALL/FINISHED GRADE MEASURED 3" TO 4" FROM TRUNK. THIS INCLUDES TREES THAT ARE SET ON SLOPES (SEE SLOPE PLANTING DETAIL). TREES THAT DO NOT HAVE A VISIBLE ROOT COLLAR SHALL BE REJECTED. DO NOT COVER THE ROOT BALL WITH SOIL.
6. WHEN ROOT BALL WILL REMAIN INTACT, CUT OFF BOTTOM ⅓ OF WIRE BASKET BEFORE PLACING TREE IN HOLE. CUT OFF REMAINDER OF BASKET AFTER TREE IS SET IN HOLE, REMOVE BASKET COMPLETELY. AT A MINIMUM, THE TOP ⅔ OF THE BURLAP AND BASKET SHALL BE REMOVED FROM THE ROOT BALL ON ALL TREES. REMOVE ALL NYLON TIES, TWINE, ROPE AND BURLAP. REMOVE UNNECESSARY PACKING MATERIAL.
7. FORM SOIL INTO A 3" TO 5" TALL WATERING RING (SAUCER) AROUND PLANTING AREA. THIS IS NOT NECESSARY IN IRRIGATED TURF AREAS. APPLY 2" TO 4" DEPTH OF SPECIFIED MULCH OVER PLANTING AREA AND INSIDE SAUCERS, AWAY FROM TRUNK.
8. STAKING AND GUYING OF TREES IS OPTIONAL IN MOST PLANTING SITUATIONS. IN AREAS OF EXTREME WINDS OR ON STEEP SLOPES, STAKING MAY BE REQUIRED TO STABILIZE TREES. STAKING AND GUYING MUST BE REMOVED WITHIN 1 YEAR OF PLANTING DATE.
9. TREE WRAP IS NOT TO BE USED ON ANY NEW PLANTINGS, EXCEPT IN LATE FALL PLANTING SITUATIONS AND ONLY THEN AFTER CONSULTATION WITH THE TOWN ARBORIST.
10. RESETTING OF IMPROPERLY PLANTED TREES WILL ONLY BE ALLOWED IF IT IS DETERMINED THAT DOING SO WIL IN NO WAY COMPROMISE THE ROOT BALL, AND SHALL ONLY BE DONE WITH APPROVAL OF THE TOWN ARBORIST.

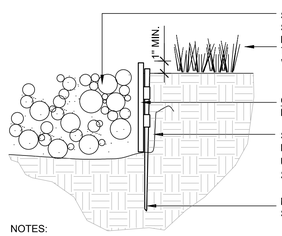



WHEN PLANTED ON A CURVE ORIENT ROWS TO FOLLOW THE LONG AXIS OF AREAS WHERE PLANTS ARE MASSED.

## 3 PERENNIAL OR GRASS PLANTING

NOT TO SCALE

COL-MET
3333 MILLER PARK SOUTH
GARLAND, TX, 75042
TOLL FREE:
1-800-829-8225
PHONE: (972) 494-3900
FAX: (972) 494-1605




SIZE
- [X] 10' x 4" x 14GA
- [ ] 10' x 4" x 12GA
- [ ] 10' x 4" x 1/8"
- [ ] 10' x 4" x 3/16"
- [ ] 10' x 4" x 1/4"
- [ ] 10' x 5" x 3/16"
- [ ] 10' x 5" x 1/4"
- [ ] 10' x 6" x 14GA
- [ ] 10' x 6" x 12GA
- [ ] 10' x 6" x 1/8"
- [ ] 10' x 6" x 3/16"
- [ ] 10' x 6" x 1/4"

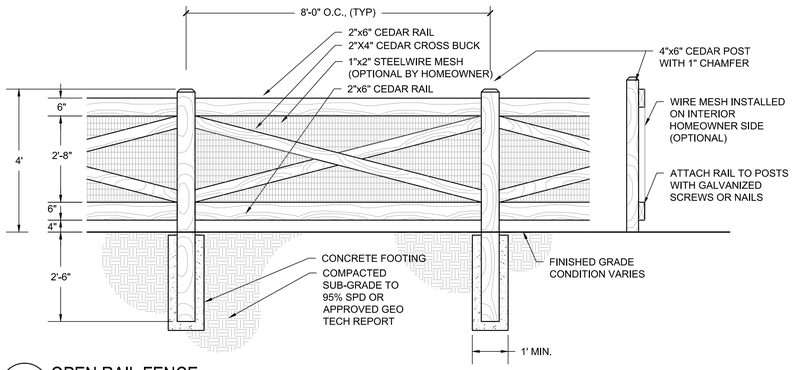
COLOR/FINISH
- [ ] BLACK
- [ ] BROWN
- [X] GREEN
- [ ] GALVANIZED

NOTES:
1. SET ALL EDGING 1" ABOVE FINISH GRADE AS SHOWN.
2. EDGING SHALL ABUT ALL CONCRETE CURBS AND WALKS PERPENDICULAR, AND FLUSH W/ GRADES OF CONCRETE.
3. INSTALLATION TO BE COMPLETED IN ACCORDANCE WITH MANUFACTURER'S SPECIFICATIONS.
4. FOR PRODUCT ORDERING, DIVIDE NUMBER OF FEET NEEDED BY 9.33 TO OBTAIN THE NUMBER OF 10' PieCES NEEDED.

## 4 STEEL EDGER

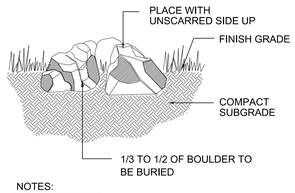
NOT TO SCALE

NOTES:
1. ALL WOOD TO BE ROUGH SAWN CEDAR.
2. WOOD TO BE WEATHER AND ROT RESISTANT
3. WOOD TO BE TREATED WITH DIAMOND VOGEL GS201 SPICE BROWN STAIN.
4. RAILS SHALL BE INSTALLED ON ONE SIDE OF POST ONLY.




## 5 OPEN RAIL FENCE

NOT TO SCALE




NOTES:

1. DO NOT FRACTURE BOULDER DURING PLACEMENT, SUCH ACTION WILL BE CAUSE FOR REJECTION.
2. SELECT AND PLACE BOULDER SO THAT A MINIMUM OF EXCAVATION SCARS ARE VISIBLE.

## 6 LANDSCAPE BOULDER

NOT TO SCALE


■ Prepared For ■

E5X MANAGEMENT
7353 SOUTH ALTON WAY
CENTENNIAL, CO 80112

■ Land Planning ■

people creating spaces
pcs group inc. www.pcsgroupco.com
#3, B-180 Independence plaza
1007 16th street . denver co 80265
t 303.531.4905 . f 303.531.4908

■ Engineering ■

CVL CONSULTANTS
10333 E. DRY CREEK RD. #240
ENGLEWOOD, CO 80112
720-482-9526


# TRAILS AT CROWFOOT
FILING NO. 9
PARKER, COLORADO
LANDSCAPE PLANS

Drawn by: JWI, BEM, GG
Checked by: PCS STAFF
Submittal Date:
12.08.2017
01.26.2017
02.20.2018
04.6.2018
08.10.2018

Know what's **below.** **Call** before you dig.

■ Sheet Name ■
SITE & LANDSCAPE DETAILS

■ Sheet Number ■
L2.0


Y:\HESS RANCH\LANDSCAPE ARCHITECTURE\CURRENT DWGS\HESS-LDSCP PLANS - FILING 9.DWG

# TRAILS AT CROWFOOT

FILING 9

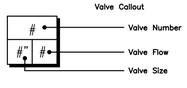
## IRRIGATION SCHEDULE

| SYMBOL | MANUFACTURER/MODEL/DESCRIPTION | PSI |
|---|---|---|
| 60 Q T 150 H 210 TT TQ F | HUNTER PROS-06-PRS30-CV WITH TORO NOZZLE 8 SERIES TURF SPRAY, 30 PSI REGULATED 6.0" POP-UP. WITH FACTORY INSTALLED DRAIN CHECK VALVE. CO-MOLDED WIPER SEAL WITH UV RESISTANT MATERIAL. UTILIZE TORO PRECISION SERIES SPRAY NOZZLES. | 30 |
| 60 Q T 150 H 210 TT TQ F | HUNTER PROS-06-PRS30-CV WITH TORO NOZZLE 10 SERIES TURF SPRAY, 30 PSI REGULATED 6.0" POP-UP. WITH FACTORY INSTALLED DRAIN CHECK VALVE. CO-MOLDED WIPER SEAL WITH UV RESISTANT MATERIAL. UTILIZE TORO PRECISION SERIES SPRAY NOZZLES. | 30 |
| 60 Q T 150 H 210 TT TQ F | HUNTER PROS-06-PRS30-CV WITH TORO NOZZLE 12 SERIES TURF SPRAY, 30 PSI REGULATED 6.0" POP-UP. WITH FACTORY INSTALLED DRAIN CHECK VALVE. CO-MOLDED WIPER SEAL WITH UV RESISTANT MATERIAL. UTILIZE TORO PRECISION SERIES SPRAY NOZZLES. | 30 |
| 60 Q T 150 H 210 TT TQ F | HUNTER PROS-06-PRS30-CV WITH TORO NOZZLE 15 SERIES TURF SPRAY, 30 PSI REGULATED 6.0" POP-UP. WITH FACTORY INSTALLED DRAIN CHECK VALVE. CO-MOLDED WIPER SEAL WITH UV RESISTANT MATERIAL. UTILIZE TORO PRECISION SERIES SPRAY NOZZLES. | 30 |
| 4X30SST 4X18SST 4X15LCS 4X9LCS 4X15RCS 4X9RCS | HUNTER PROS-06-PRS30-CV WITH TORO NOZZLE 4X STRIP SPRAY TURF SPRAY, 30 PSI REGULATED 6.0" POP-UP. WITH FACTORY INSTALLED DRAIN CHECK VALVE. CO-MOLDED WIPER SEAL WITH UV RESISTANT MATERIAL. UTILIZE TORO PRECISION SERIES SPRAY NOZZLES. | 30 |

| SYMBOL | MANUFACTURER/MODEL/DESCRIPTION |
|---|---|
| | DRIP VALVE ASSEMBLY<br>NETAFIM LVCZ5801 0075-HF. PRE-ASSEMBLED CONTROL ZONE KIT, WITH 1" SERIES 80 CONTROL VALVE, 3/4" DISC FILTER, AND HIGH FLOW PRESSURE REGULATOR 4.5GPM TO 17.6GPM. |
| | DRIP FLUSH VALVE ASSEMBLY<br>NETAFIM TLFV-1. AUTOMATIC FLUSH VALVE, WITH INSERT INLET |

| SYMBOL | MANUFACTURER/MODEL/DESCRIPTION |
|---|---|
| | REMOTE CONTROL VALVE ASSEMBLY<br>HUNTER MODEL ICV 1", 1-1/2", 2", AND 3" PLASTIC ELECTRIC REMOTE CONTROL VALVES, GLOBE CONFIGURATION |
| | QUICK COUPLER VALVE ASSEMBLY<br>HUNTER HQ-5RC: VALVE WITH YELLOW RUBBER COVER, RED BRASS AND STAINLESS STEEL, WITH 1" NPT INLET, 1-PIECE BODY. |
| | ISOLATION GATE VALVE ASSEMBLY<br>MATCO-NORCA 514TX: 1/2"-4" BRASS GATE VALVE, FULL PORT, WITH SOLID WEDGE. IPS. CROSS HANDLE. SAME SIZE AS MAINLINE PIPE. |
| | NORMALLY OPEN MASTER VALVE ASSEMBLY<br>2-INCH BUCKNER-SUPERIOR 3100, NORMALLY OPEN BRASS MASTER VALVE THAT PROVIDES DIRTY WATER PROTECTION. |
| F | FLOW SENSOR ASSEMBLY<br>2-INCH PVC TEE TYPE FLOW SENSOR W/SOCKET ENDS, CUSTOM MOUNTING TEE AND ULTRA-LIGHTWEIGHT IMPELLER ENHANCES LOW FLOW MEASUREMENT. 2 WIRE DIGITAL OUTPUT. FLOW RANGE 2.8-170 GPM. |
| | INLINE CHECK VALVE ASSEMBLY<br>MATCO-NORCA 523T: 1/2"-2" WHITE PVC INLINE CHECK VALVE. THREADED ENDS. STAINLESS STEEL SPRING LOADED. SAME SIZE AS MAINLINE PIPE. |
| | REDUCED PRESSURE BACKFLOW PREVENTER<br>WILKINS 375B- BACKFLOW PREVENTER WITH BLOW OUT/FLUSH FITTING. REINFORCED NYLON HOUSING AND CAST BRONZE BALL VALVES. SIZED TO MATCH TAP & METER (RE: POC NOTE). |
| A | AIR AND VACUUM RELIEF VALVE ASSEMBLY<br>CRISPIN MODEL UL10, 1" MODEL. INSTALL PER MANUFACTURER'S RECOMMENDATIONS. INSTALL AT SYSTEM HIGH POINTS. |
| F G | TWO-WIRE PEDEDSTAL MOUNT CONTROLLER<br>WEATHERMATIC SMARTLINE 48-ZONE TWO-WIRE CONTROLLER, INTERNAL 120VAC/230VAC TRANSFORMER, 900 MHZ RANGE. INSTALL WITH SMARTKLINK AIRCARD WITH FLOW. INSTALL SLW5 WIRELESS WEATHER STATION.<br>UTILIZE STAINLESS STEEL PEDESTAL, MODEL SLPED-ENC-SS-1600. [UTILIZE NORMALLY OPEN PANEL] |
| | WEATHERMATIC SURGE DECODER. INSTALL PER MANUFACTURER'S RECOMMENDATIONS (APPROX. EVERY 600', AT THE CONTROLLER, AND AT THE END OF EACH MAINLINE RUN). INSTALL 8' COPPER CLAD GROUNDING ROD INSTALLED AT LEAST 8' FROM VALVE BOX, PERPENDICULAR TO 2-WIRE CONTROL CABLE |
| | IRRIGATION LATERAL LINE: PVC CLASS 200 SDR 21<br>ONLY LATERAL TRANSITION PIPE SIZES 1-1/4" AND ABOVE ARE INDICATED ON THE PLAN, WITH ALL OTHERS BEING 1" IN SIZE. |
| | DRIP IRRIGATION LATERAL LINE TO EMITTERS: UV RADIATION RESISTANT POLYETHYLENE PIPE, 3/4-INCH UNLESS OTHERWISE SPECIFIED. |
| | DRIP IRRIGATION LATERAL LINE TO EMITTERS IN NATIVE SEED:<br>3/4-INCH UV RADIATION RESISTANT POLYETHYLENE PIPE TO NETAFIM INLINE DRIP TUBING TREE RINGS (RE: DETAILS). |
| | IRRIGATION MAINLINE: PVC CLASS 200 SDR 21<br>POC #6: 3-INCH UNLESS OTHERWISE NOTED.<br>POC #7: 3-INCH UNLESS OTHERWISE NOTED. |
| | PIPE SLEEVE: PVC CLASS 200 SDR 21<br>SLEEVE SHALL BE TWICE THE SIZE OF THE PIPE RUNNING THRU IT. NO TWO PIPES/WIRES SHALL SHARE A SLEEVE. |

**Valve Callout**




## REFERENCE NOTES SCHEDULE

| SYMBOL | DESCRIPTION |
|---|---|
| 1 | THE IRRIGATION SYSTEM POINT-OF-CONNECTION (POC) SHALL BE DOWNSTREAM OF THE EXISTING IRRIGATION WATER TAP AND METER, AT THE APPROXIMATE LOCATION SHOWN. INSTALL BACKFLOW PREVENTION UNIT, MASTER VALVE ASSEMBLY, AND FLOW SENSOR AS INDICATED. VERIFY EXACT LOCATION OF POC WITH OWNER'S REPRESENTATIVE. VERIFY PRESSURE AND FLOW ON SITE PRIOR TO CONSTRUCTION. |
| 2 | PEDESTAL MOUNT THE IRRIGATION CONTROLLER AT THE APPROXIMATE LOCATION SHOWN. COORDINATE ELECTRICAL POWER TO THE CONTROLLER WITH THE OWNER'S REPRESENTATIVE. CARE SHOULD BE TAKEN TO INSTALL THE IRRIGATION CONTROLLER IN A LOCATION THAT IS ACCESSIBLE FOR MAINTENANCE, AND SCREENED FROM VIEW EITHER BEHIND ENTRY WALLS, NEXT TO BUILDINGS, OR BEHIND PLANT MATERIAL. FINAL LOCATION TO BE APPROVED BY OWNER'S REPRESENTATIVE. INSTALL PER NATIONAL ELECTRIC CODE (NEC). |
| 3 | IRRIGATION SHOWN IN HARDSCAPE FOR CLARITY ONLY. ALL IRRIGATION SHALL BE INSTALLED IN LANDSCAPED AREA. ANY IRRIGATION TO BE INSTALLED UNDER HARDSCAPE SHALL BE SLEEVED. |
| 4 | MAINLINE, SPRINKLER LATERAL, AND/OR DRIP LATERAL SHOWN SLEEVED TOGETHER IS FOR CLARITY ONLY. CONTRACTOR SHALL INSTALL MAINLINE, CONTROL WIRES, AND LATERAL LINES IN SEPARATE SLEEVES. |
| 5 | CONTRACTOR SHALL STUB OUT MAINLINE AND 3' FOOT COIL OF CONTROL WIRES (IN SEPARATE 6" ROUND VALVE BOX) FOR CONNECTION TO ADJACENT FILING. REFER TO ADJACENT CALLOUT FOR NUMBER OF WIRES NEEDED. CONTROLLERS 'F' & 'G' SHALL STUB OUT COIL OF TWO-WIRE CABLE. |
| 7 | CONTRACTOR SHALL STUB OUT LATERAL LINE FOR CONNECTION TO ADJACENT FILING. SIZE AS SHOWN ON PLANS. |

## EMITTER SCHEDULE

| PLANT TYPE | EMITTER TYPE | GPH/OUTLET | NO. OF EMITTERS | TOTAL FLOW |
|---|---|---|---|---|
| GROUNDCOVER | SINGLE OUTLET | 1 GPH | 1 | 1 GPH |
| PERENNIALS | SINGLE OUTLET | 1 GPH | 1 | 1 GPH |
| 1 GAL. SHRUB | SINGLE OUTLET | 1 GPH | 1 | 1 GPH |
| 5 GAL. SHRUB | SINGLE OUTLET | 1 GPH | 2 | 2 GPH |
| TREE IN SHRUB BED | SINGLE OUTLET | 1 GPH | 4-8 | 4-8 GPH |
| TREE IN NATIVE SEED | INLINE DRIP* | 0.6 GPH | N/A | N/A |

NOTES:
1. MULTIPLE OUTLET EMITTERS CAN BE UTILIZED IN DENSLY PLANTED AREAS AND FOR TREES IN SHRUB BEDS.
2. REFER TO LEGEND AND DETAILS FOR INLINE DRIP TOTALS.

## INSTALLATION GENERAL NOTES

1. DESIGN ASSUMES A MINIMUM DYNAMIC PRESSURE FOR THE IRRIGATION SYSTEM (PER CITY OR ENGINEER) OF UP TO 90 PSI, AT A MINIMUM FLOW OF 70 GPM AT EACH 2-INCH POINT-OF-CONNECTION (POC). VERIFY PRESSURE AND FLOW ON SITE PRIOR TO CONSTRUCTION. CONTACT GENERAL CONTRACTOR OR OWNERS REPRESENTATIVE IMMEDIATELY IF FLOW OR PRESSURE ARE LOWER THAN LISTED ABOVE. BOOSTER PUMP MAY BE REQUIRED.
   1.1. NEITHER HISTORICAL NOR CIVIL SITE HYDRAULICS WERE AVAILABLE AT THE TIME OF DESIGN.

2. CONTRACTOR SHALL BECOME FAMILIAR WITH THE SPECIFICATIONS AND INSTALLATION DETAILS FOR THIS AND RELATED WORK PRIOR TO CONSTRUCTION. FOR CLARIFICATION, CONTACT IRRIGATION DESIGNER PRIOR TO CONSTRUCTION.
   2.1. UPON FINAL ACCEPTANCE, CONTRACTOR SHALL TURN OVER REQUIRED ADJUSTMENT KEYS INCLUDING BUT NOT LIMITED TO CONTROLLER ENCLOSURE AND BACKFLOW ENCLOSURE KEY, LOCKING VALVE BOX KEYS, QUICK COUPLER KEYS, GATE VALVE KEY, SPRINKLER HEAD AND NOZZLE ADJUSTMENT KEYS.
   2.2. UPON FINAL ACCEPTANCE, CONTRACTOR SHALL TURN OVER SPARE PARTS PERTAINING TO INSTALLED SYSTEM: BACKFLOW WINTERIZATION INSERT, TWO OF EVERY HEAD AND NOZZLE (ROTOR NOZZLE TREE INCLUDED), ONE RCV DIAPHRAGM, ETC.

3. COORDINATE UTILITY LOCATES OF UNDERGROUND UTILITIES PRIOR TO CONSTRUCTION ("811-CALL BEFORE YOU DIG") .

4. IF DISCREPANCIES ARE NOTED IN THE FIELD BETWEEN SITE CONDITIONS AND PROVIDED DESIGNS, CONTRACTOR SHALL NOTIFY OWNERS REPRESENTATIVE OR GENERAL CONTRACTOR IMMEDIATELY. DO NOT PROCEED WITH THE INSTALLATION OF THE IRRIGATION SYSTEM IF SUCH DISCREPANCIES IN THE FIELD AFFECT THE PROVIDED DESIGN, DETAILS, OR SPECIFICATIONS.

5. ALL IRRIGATION COMPONENTS (MAINLINE, WIRES, LATERAL LINES, ETC.) SHALL BE INSTALLED IN LANDSCAPED AREAS WHENEVER POSSIBLE, EVEN THOUGH SAID IRRIGATION COMPONENTS MAY BE SHOWN OUTSIDE PLANTING AREAS FOR CLARITY.

5. AVOID CONFLICTS BETWEEN THE IRRIGATION SYSTEM, PLANTING MATERIALS, AND ARCHITECTURAL FEATURES WHENEVER POSSIBLE. COORDINATE POTENTIAL RELOCATION OF BOULDERS AND TREES IN TURF AREAS WITH LANDSCAPE ARCHITECT PRIOR TO SPRINKLER LAYOUT. IF LANDSCAPE MATERIAL CANNOT BE REOLOCATED,ADDITIONAL SPRINKLERS MAY BE REQUIRED.

6. CROSS FITTINGS ARE NOT ALLOWED, ONLY STANDARD TEES AND ELBOWS.

7. CONTRACTOR SHALL INSTALL NOZZLES PER PLAN, UNLESS IRRIGATED AREA CHANGED IN SIZE OR PLANT MATERIAL TYPE CHANGES. IF NOZZLE CHANGES ARE REQUIRED AND ARE SIGNIFICANT IN SIZE, CONTRACTOR SHALL CONTACT IRRIGATION DESIGNER FOR APPROVAL.

8. CONTRACTOR SHALL FIELD LOCATE ANY EXISTING SLEEVES ON SITE PRIOR TO CONSTRUCTION WITH THE AID OF THE GENERAL CONTRACTOR. MISSING SLEEVES SHALL BE REPORTED IMMEDIATELY. NEW SLEEVES SHOWN ON PLANS ARE REQUIRED FOR BOTH PIPING AND ELECTRICAL WIRING AT EACH HARDSCAPE CROSSING. COORDINATE INSTALLATION OF SLEEVING WITH OTHER TRADES. ANY PIPE OR WIRE WHICH PASSES BENEATH EXISTING HARDSCAPE WHERE SLEEVING WAS NOT INSTALLED WILL REQUIRE HORIZONTAL BORING BY THE IRRIGATION CONTRACTOR.

9. INSTALL ALL ELECTRICAL POWER TO THE IRRIGATION CONTROL SYSTEM IN ACCORDANCE WITH THE NATIONAL ELECTRIC CODE AND ALL APPLICABLE LOCAL ELECTRIC UTILITY CODES.

10. THE FOLLOWING SHOULD BE NOTED REGARDING PIPE SIZING: IF A SECTION OF UNSIZED PIPE IS LOCATED BETWEEN THE IDENTICALLY SIZED SECTIONS, THE UNSIZED PIPE IS THE SAME NOMINAL SIZE AS THE TWO SIZED SECTIONS. THE UNSIZED PIPE SHOULD NOT BE CONFUSED WITH THE DEFAULT PIPE SIZE NOTED IN THE LEGEND.
   10.1. MAINLINE PIPE SIZES MAY VARY THROUGHOUT PROJECT. EACH MAINLINE LEG IS SIZED TO ACCOMMODATE LARGEST VALVE ON THAT LEG. STATED SIZE IN LEGEND MAY NOT BE THE LARGEST SIZE ON PLANS.

11. TWO-WIRE CONTROL CABLE DOES NOT REQUIRE ADDITIONAL SPARE WIRES TO BE ROUTED WITH MAINLINE.
   11.1. TWO-WIRE CONTROL SURGE ARRESTORS SHALL BE INSTALLED PER MANUFACTURERS RECOMMENDATIONS. ARRESTORS ARE NOT DEPICTED ON PLANS
   11.2. FIRST SURGE DECODER SHALL BE PLACED AT CONTROLLER, THEN EVERY 600' (APPROX.) THEREAFTER.
   11.3. INSTALL NEAR VALVE USING EITHER 8' GROUND ROD OR PLATE. INSTALL PER INDUSTRY STANDARDS.
   11.4. DECODERS MUST BE PROGRAMMED AT THE CONTROLLER BEFORE WIRING TO VALVES.

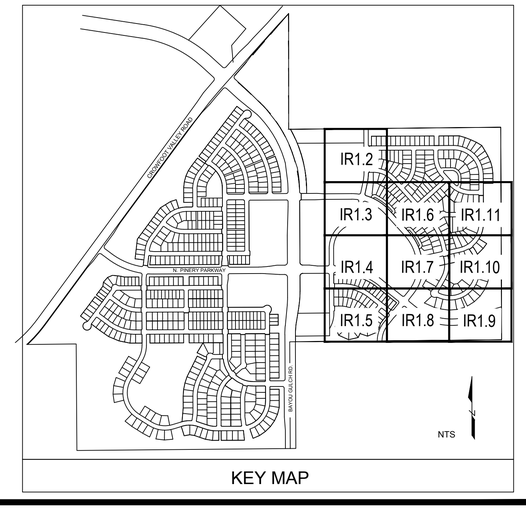
12. TREES IN TURF ARE NOT IRRIGATED BY DRIP SYSTEM. DRIP LATERAL ROUTED NEAR TREES IN TURF ARE NOT TO RECEIVE DRIP IRRIGATION. TREES IN UNDISTURBED NATIVE SEEDED AREAS ARE IRRIGATED ON DRIP SYSTEM.

13. NO IRRIGATION EQUIPMENT, INCLUDING BUT NOT LIMITED TO, MAINLINE, VALVES, AND SPRINKLERS, SHALL BE INSTALLED WITHIN 3' OF NEW BUILDING FOUNDATION.

14. SPRINKLER ZONES CAN ONLY COVER AN ELEVATION RANGE OF 14', THUS THE SMALLER VALVE SIZES. ZONES CAN OPERATE SIMULTANEOUSLY WHERE APPLICABLE.
   14.1. MAINLINE LOOPS ARE SIZED TO UTILIZE TAP SUPPLY OF 70 GPM.
   14.2. DEAD END MAINLINE RUNS ARE SIZED TO ACCOMMODATE THE LARGEST VALVE ON THE RUN.

The Town of Parker review constitutes general compliance with the Town's Standards and approved variances, subject to these plans being stamped, signed, and dated by the professional engineer of record. Review by the Town does not constitute approval of the plan design or accuracy and correctness of engineering calculations. Errors in the design or calculations remain the responsibility of the registered professional engineer whose stamp and signature are affixed to this document.
This review does not constitute approval of any private on-site improvements which may be shown. Construction cannot commence until all required drainage/traffic report(s), final development plan(s), special review(s), grading permit, and/or other permits are complete, approved and on file with the Town of Parker.

Town of Parker, Director of Engineering Date




KEY MAP

■ Prepared For■

E5X MANAGEMENT
7353 SOUTH ALTON WAY
CENTENNIAL, CO 80112

■ Irrigation Design ■

MPI Designs
P.O. BOX 345
Windsor, CO 80550
970.402.3047
Michelle@MPiDesignsllc.com

■ Engineering ■

CVL CONSULTANTS
10333 E. DRY CREEK RD. #240
ENGLEWOOD, CO 80112
720-482-9526

TRAILS AT CROWFOOT
FILING NO. 9
PARKER, COLORADO

IRRIGATION PLANS

| | |
|---|---|
| Drawn by: | MLP |
| Checked by: | TEAM |
| Submittal Date: | 12.08.2017 |
| | 01.26.2017 |
| Know what's below. Call before you dig. | 02.20.2018 |
| | 04.6.2018 |
| | 08.10.2018 |

■ Sheet Name ■
IRRIGATION LEGEND AND NOTES

■ Sheet Number ■
IR1.0

C:\DROPBOX\DROPBOX\MPI DESIGNS\CLIENT FILES\E5X MANAGEMENT\TRAIL AT CROWFOOT\DESIGN FILES\SHEETS--IR--TRAILS
8/10/2018 3:01:10 PM

# TRAILS AT CROWFOOT

FILING 9

**Landscape/Irrigation Worksheet**

**Project Name:** TRAILS AT CROWFOOT

**Landscape/Irrigation Tap address (physical location of tap)** POC #7 : 18100 1/2 N. Pinery Parkway

| Landscape Area | High Water **TURF** (6,000sf = 1 SFE) | Low Water **Native Grass** and **Spray Shrubs & Perennials** (10,000sf = 1 SFE) | **Drip Irrigated** area (20,000sf = 1 SFE) | **Non**-Irrigated area | **Sub-Total** of (calculated) Areas | **PWSD** one SFE per 6000 | **SFE Requirement** (Sub-Total Calculation **divided** by 6000 = requirement) |
|---|---|---|---|---|---|---|---|
| Area #1 | 0 sf x 1 = 0 | 60,390 sf x .6 = 36,234 | 18,699 sf x .3 = 5,610 | 0 sf x 0 = 0 | 41,844 sf | 6,000 | 6.97 SFE's |

Worksheet Completed by: MICHELLE PETERSON
Company: MPI DESIGNS
Address: PO BOX 345, WINDSOR, CO
Phone #: 970-402-3047

Owner/Developer: EX5 MANAGEMENT
Attn: MATT JENKE
Billing Address: 7353 SOUTH ALTON WAY, CENTENNIAL
Phone #: N/A

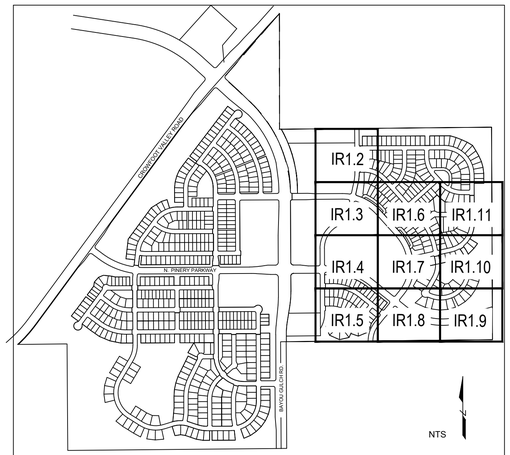
**ET Controller (with Rain Sensor)**

| | |
|---|---|
| Manufacturer | WEATHERMATIC |
| Model number | SMARTLINK SL4800 WITH SLW5 WEATHER STATION |

**Tap Size Requirements:**
0 - 1 SFE's requires a 3/4-inch tap
1.1 - 2.0 SFE's requires a 1-inch tap
2.1 - 4.0 SFE's requires a 1 1/2-inch tap
4.1 - 7.0 SFE's requires a 2-inch tap
7.1 - 16.0 SFE's requires a 3-inch tap

The Town of Parker review constitutes general compliance with the Town's Standards and approved variances, subject to these plans being stamped, signed, and dated by the professional engineer of record. Review by the Town does not constitute approval of the plan design or accuracy and correctness of engineering calculations. Errors in the design or calculations remain the responsibility of the registered professional engineer whose stamp and signature are affixed to this document.
This review does not constitute approval of any private on-site improvements which may be shown. Construction cannot commence until all required drainage/traffic report(s), final development plan(s), special review(s), grading permit, and/or other permits are complete, approved and on file with the Town of Parker.

Town of Parker, Director of Engineering _____ Date _____




KEY MAP


■ Prepared For■

E5X MANAGEMENT
7353 SOUTH ALTON WAY
CENTENNIAL, CO 80112

■ Irrigation Design ■

MPi Designs
P.O. BOX 345
Windsor, CO 80550
970.402.3047
Michelle@MPiDesignsllc.com

■ Engineering ■

CVL CONSULTANTS
10333 E. DRY CREEK RD. #240
ENGLEWOOD, CO 80112
720-482-9526


TRAILS AT CROWFOOT
FILING NO. 9
PARKER, COLORADO
IRRIGATION PLANS

Drawn by: MLP
Checked by: TEAM
Submittal Date: 12.08.2017
01.26.2017
02.20.2018
04.6.2018
08.10.2018

Know what's **below.** **Call** before you dig. 811

■ Sheet Name ■
IRRIGATION WORKSHEETS

■ Sheet Number ■
IR1.1

C:\DROPBOX\DROPBOX\MPI DESIGNS\CLIENT FILES\E5X MANAGEMENT\TRAIL AT CROWFOOT\DESIGN FILES\SHEETS--IR--TRAILS

NATIVE SEED AREAS ARE TO BE IRRIGATED BY A TEMPORARY HYDRANT METER SYSTEM NOT SHOWN ON THIS PLAN SET (TYP).

BEEBALM AVE

ALPINE PHLOX ST

ALPINE PHLOX LN

F7
1½" | 42

3

2½"

1¼"

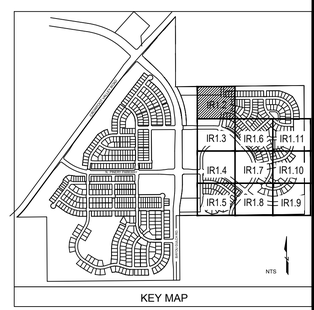
2"

1¼"

2½"

SPRINKLERS UTILIZED CAN HOLD BACK APPROX. 14 FEET OF ELEVATION ACROSS A ZONE. THEREFORE, SPRINKLERS ARE VALVED TO AVOID EXCESSIVE LOW HEAD DRAINAGE (TYP).

MATCHLINE - SEE SHEET IR1.3




KEY MAP

NORTH

0 10' 20' 30' 60'

SCALE: 1"=30'-0"

■ Prepared For■

E5X MANAGEMENT
7353 SOUTH ALTON WAY
CENTENNIAL, CO 80112

■ Irrigation Design ■

MPi Designs
P.O. BOX 345
Windsor, CO 80550
970.402.3047
Michelle@MPiDesignsllc.com

■ Engineering ■

CVL CONSULTANTS
10333 E. DRY CREEK RD. #240
ENGLEWOOD, CO 80112
720-482-9526

# TRAILS AT CROWFOOT
FILING NO. 9
PARKER, COLORADO
IRRIGATION PLANS

Drawn by: MLP
Checked by: TEAM
Submittal Date: 12.08.2017
01.26.2017
02.20.2018
04.6.2018
08.10.2018

Know what's **below.** **Call** before you dig. 811

■ Sheet Name ■
IRRIGATION PLAN

■ Sheet Number ■
IR1.2

C:\DROPBOX\DROPBOX\MPI DESIGNS\CLIENT FILES\E5X MANAGEMENT\TRAIL AT CROWFOOT\DESIGN FILES\SHEETS-IR-TRAILS

MATCHLINE - SEE SHEET IR1.2

NATIVE SEED AREAS ARE TO BE IRRIGATED BY A TEMPORARY HYDRANT METER SYSTEM NOT SHOWN ON THIS PLAN SET (TYP).

2½"

ALPINE PHLOX ST

22

21

20

19

6

2½"

6

SCARLET SAGE AVE

F33
1" | 25

6

5

2"

1¼"

(2)3"ϕ
(1)6"

6

3

2"

TRACT C

ALPINE DAISY CIR

F

POC 6
SIZE: 2-INCH
FLOW: 70 GPM
PRESSURE: 77 PSI
REQUIRED

CONTROLLER F
120 VAC POWER REQUIRED

TRACT P

SCARLET SAGE AVE

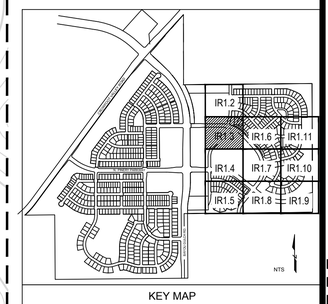
F32
1" | Drip

MATCHLINE - SEE SHEET IR1.6

ALPINE PHLOX ST

TRACT D

MATCHLINE - SEE SHEET IR1.3




KEY MAP

NORTH 0 10' 20' 30' 60'
SCALE: 1"=30'-0"

C:\DROPBOX\DROPBOX\MPI DESIGNS\CLIENT FILES\E5X MANAGEMENT\TRAIL AT CROWFOOT\DESIGN FILES\SHEETS-IR-TRAILS

■ Prepared For■

E5X MANAGEMENT
7353 SOUTH ALTON WAY
CENTENNIAL, CO 80112

■ Irrigation Design ■

MPi Designs
P.O. BOX 345
Windsor, CO 80550
970.402.3047
Michelle@MPiDesignsllc.com

■ Engineering ■

CVL CONSULTANTS
10333 E. DRY CREEK RD. #240
ENGLEWOOD, CO 80112
720-482-9526

# TRAILS AT CROWFOOT

FILING NO. 9

PARKER, COLORADO

IRRIGATION PLANS

| | |
|---|---|
| Drawn by: | MLP |
| Checked by: | TEAM |
| Submittal Date: | 12.08.2017 |
| | 01.26.2017 |
| | 02.20.2018 |
| | 04.6.2018 |
| | 08.10.2018 |

Know what's **below.** **Call** before you dig. 811

■ Sheet Name ■
IRRIGATION PLAN

■ Sheet Number ■
IR1.3

MATCHLINE - SEE SHEET IR1.3

ALPINE PHLOX ST

N. PINERY PKWY.
(R.O.W. WIDTH VARIES)

F19
1½" 36

F20
1" 14.5

F22
1½" 53

G3
1" Drip

G4
1" Drip

G5
1½" 43

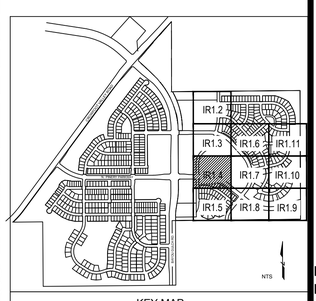
6
3
2"
1¼"
1½"
(2)2"

NATIVE SEED AREAS ARE TO BE IRRIGATED BY A TEMPORARY HYDRANT METER SYSTEM NOT SHOWN ON THIS PLAN SET (TYP).

SPRINKLERS UTILIZED CAN HOLD BACK APPROX. 14 FEET OF ELEVATION ACROSS A ZONE. THEREFORE, SPRINKLERS ARE VALVED TO AVOID EXCESSIVE LOW HEAD DRAINAGE (TYP).

MATCHLINE - SEE SHEET IR1.7

MATCHLINE - SEE SHEET IR1.5



KEY MAP

NORTH
0 10' 20' 30' 60'
SCALE: 1"=30'-0"

C:\DROPBOX\DROPBOX\MPI DESIGNS\CLIENT FILES\E5X MANAGEMENT\TRAIL AT CROWFOOT\DESIGN FILES\SHEETS-IR--TRAILS


■ Prepared For■

E5X MANAGEMENT
7353 SOUTH ALTON WAY
CENTENNIAL, CO 80112

■ Irrigation Design ■

MPi Designs
P.O. BOX 345
Windsor, CO 80550
970.402.3047
Michelle@MPiDesignsllc.com

■ Engineering ■

CVL CONSULTANTS
10333 E. DRY CREEK RD. #240
ENGLEWOOD, CO 80112
720-482-9526


# TRAILS AT CROWFOOT
FILING NO. 9
PARKER, COLORADO

IRRIGATION PLANS

Drawn by: MLP
Checked by: TEAM
Submittal Date: 12.08.2017
01.26.2017
02.20.2018
04.6.2018
08.10.2018

Know what's **below.** **Call** before you dig. 811

■ Sheet Name ■
IRRIGATION PLAN

■ Sheet Number ■
IR1.4

MATCHLINE - SEE SHEET IR1.4

SPRINKLERS UTILIZED CAN HOLD BACK APPROX. 14 FEET OF ELEVATION ACROSS A ZONE. THEREFORE, SPRINKLERS ARE VALVED TO AVOID EXCESSIVE LOW HEAD DRAINAGE (TYP).

G9 | 1½" | 43

G2 | 2" | 69

G26 | 1" | 13

G10 | 1½" | 33

ALPINE PHLOX ST

SKY PILOT AVE

SKY PILOT LN

PURPLE ASTER WAY

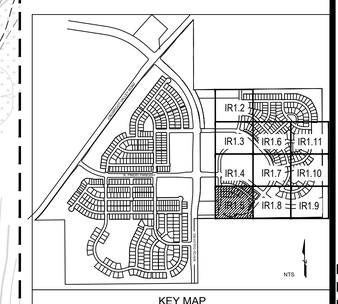
(2)3"& (1)6"

MAINLINE SHALL BE ROUTED THRU DISTURBED AREAS ONLY. NO CONTROL WIRES ARE TO BE INSTALLED IN THIS AREA.

MAINLINE SHALL BE ROUTED THRU DISTURBED AREAS ONLY. NO CONTROL WIRES ARE TO BE INSTALLED IN THIS AREA.

TRACT G

MATCHLINE - SEE SHEET IR1.9




KEY MAP

NORTH

SCALE: 1"=30'-0"

C:\DROPBOX\DROPBOX\MPI DESIGNS\CLIENT FILES\E5X MANAGEMENT\TRAIL AT CROWFOOT\DESIGN FILES\SHEETS-IR-TRAILS

■ Prepared For■

E5X MANAGEMENT
7353 SOUTH ALTON WAY
CENTENNIAL, CO 80112

■ Irrigation Design ■

MPI Designs
P.O. BOX 345
Windsor, CO 80550
970.402.3047
Michelle@MPiDesignsllc.com

■ Engineering ■

CVL CONSULTANTS
10333 E. DRY CREEK RD. #240
ENGLEWOOD, CO 80112
720-482-9526

# TRAILS AT CROWFOOT

FILING NO. 9

PARKER, COLORADO

IRRIGATION PLANS

| | |
|---|---|
| Drawn by: | MLP |
| Checked by: | TEAM |
| Submittal Date: | 12.08.2017 |
| | 01.26.2017 |
| | 02.20.2018 |
| | 04.6.2018 |
| | 08.10.2018 |

Know what's **below.** **Call** before you dig. 811

■ Sheet Name ■
IRRIGATION PLAN

■ Sheet Number ■
IR1.5

MATCHLINE - SEE SHEET IR1.3

MATCHLINE - SEE SHEET IR1.11

MATCHLINE - SEE SHEET IR1.7

BEEBALM TRAIL

ALPINE PHLOX LN

COPPERMALLOW TRL

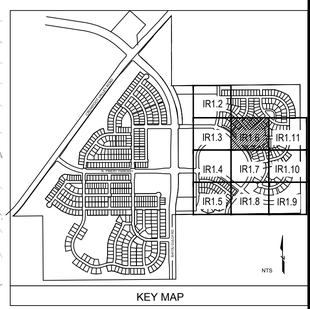
COPPERMALLOW TRL

ALPINE PHLOX LN

SCARLET SAGE AVE

SPRINKLERS UTILIZED CAN HOLD BACK APPROX. 14 FEET OF ELEVATION ACROSS A ZONE. THEREFORE, SPRINKLERS ARE VALVED TO AVOID EXCESSIVE LOW HEAD DRAINAGE (TYP).

F31
1" | 18




KEY MAP

NORTH

0 10' 20' 30' 60'

SCALE: 1"=30'-0"

C:\DROPBOX\DROPBOX\MPI DESIGNS\CLIENT FILES\E5X MANAGEMENT\TRAIL AT CROWFOOT\DESIGN FILES\SHEETS-IR-TRAILS

■ Prepared For■

E5X MANAGEMENT
7353 SOUTH ALTON WAY
CENTENNIAL, CO 80112

■ Irrigation Design ■

MPi Designs
P.O. BOX 345
Windsor, CO 80550
970.402.3047
Michelle@MPiDesignsllc.com

■ Engineering ■

CVL CONSULTANTS
10333 E. DRY CREEK RD. #240
ENGLEWOOD, CO 80112
720-482-9526

# TRAILS AT CROWFOOT
FILING NO. 9
PARKER, COLORADO
IRRIGATION PLANS

Drawn by: MLP
Checked by: TEAM
Submittal Date: 12.08.2017
01.26.2017
02.20.2018
04.6.2018
08.10.2018

Know what's **below.** **Call** before you dig. 811

■ Sheet Name ■
IRRIGATION PLAN

■ Sheet Number ■
IR1.6

MATCHLINE - SEE SHEET IR1.6

MATCHLINE - SEE SHEET IR1.4

MATCHLINE - SEE SHEET IR1.10

MATCHLINE - SEE SHEET IR1.8

F30
1" Drip

F27
1½" 28

F23
1" Tree

F24
1½" 38

(2)¾"
(1)1"

(2)¾"
(1)6"

(1)¾"
(1)6"

SCARLET SAGE AVE

BEEBALM AVE

ALPINE PHLOX LN

BLACK SEDGE DR

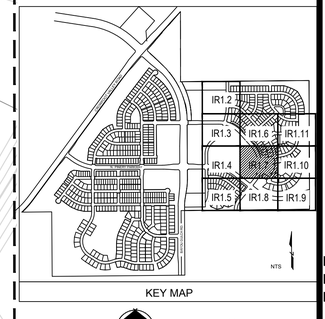
TRACT A

TRACT C

TRACT D

NATIVE SEED AREAS ARE TO BE IRRIGATED BY A TEMPORARY HYDRANT METER SYSTEM NOT SHOWN ON THIS PLAN SET (TYP).

TREES ON PARK SIDE OF SIDEWALK ARE TO BE IRRIGATED TEMPORARILY. PERMANENT IRRIGATION TO TREES SHOWN ON PARK IRRIGATION CONSTRUCTION PLANS.




KEY MAP

NORTH 0 10' 20' 30' 60'
SCALE: 1"=30'-0"


■ Prepared For■

E5X MANAGEMENT
7353 SOUTH ALTON WAY
CENTENNIAL, CO 80112

■ Irrigation Design ■

MPi Designs
P.O. BOX 345
Windsor, CO 80550
970.402.3047
Michelle@MPiDesignsllc.com

■ Engineering ■

CVL CONSULTANTS
10333 E. DRY CREEK RD. #240
ENGLEWOOD, CO 80112
720-482-9526


# TRAILS AT CROWFOOT

FILING NO. 9

PARKER, COLORADO

IRRIGATION PLANS

| | |
|---|---|
| Drawn by: | MLP |
| Checked by: | TEAM |
| Submittal Date: | 12.08.2017 |
| | 01.26.2017 |
| | 02.20.2018 |
| | 04.6.2018 |
| | 08.10.2018 |

Know what's **below.** **Call** before you dig. 811

■ Sheet Name ■
IRRIGATION PLAN

■ Sheet Number ■
IR1.7

C:\DROPBOX\DROPBOX\MPI DESIGNS\CLIENT FILES\E5X MANAGEMENT\TRAIL AT CROWFOOT\DESIGN FILES\SHEETS--IR--TRAILS
Mar 01, 2018 - 11:33:56

MATCHLINE - SEE SHEET IR1.8

MATCHLINE - SEE SHEET IR1.5

MATCHLINE - SEE SHEET IR1.9

F21
1" | Drip
4

N. PINERY PKWY.
(R.O.W. WIDTH VARIES)

G1
1" | Drip

1 POC 7
SIZE: 2-INCH
FLOW: 70 GPM
PRESSURE: 87 PSI
REQUIRED

2 CONTROLLER G
120 VAC POWER REQUIRED

G12
1" | 10

(2)3"¢
(2)6"

SCARLET SAGE AVE

G13
1" | Drip

(2)3"¢
(2)6"

1¼"

G11
1½" | 46

NATIVE SEED AREAS ARE TO BE IRRIGATED BY A TEMPORARY HYDRANT METER SYSTEM NOT SHOWN ON THIS PLAN SET (TYP).

SPRINKLERS UTILIZED CAN HOLD BACK APPROX. 14 FEET OF ELEVATION ACROSS A ZONE. THEREFORE, SPRINKLERS ARE VALVED TO AVOID EXCESSIVE LOW HEAD DRAINAGE (TYP).

TRACT H

G25
1" | Drip

G24
1½" | 43

G23
1" | Tree

G22
1" | Drip

G21
1½" | 32

G14
1½" | 39

G15
1½" | 27

(2)2"

1½"

1¼"

KEY MAP

IR1.2
IR1.3
IR1.4
IR1.5
IR1.6
IR1.7
IR1.8
IR1.9
IR1.10
IR1.11

NTS

NORTH 0 10' 20' 30' 60'
SCALE: 1"=30'-0"

C:\DROPBOX\DROPBOX\MPI DESIGNS\CLIENT FILES\E5X MANAGEMENT\TRAIL AT CROWFOOT\DESIGN FILES\SHEETS--IR--TRAILS
Plotted: 04.04.18


■ Prepared For■

E5X MANAGEMENT
7353 SOUTH ALTON WAY
CENTENNIAL, CO 80112

■ Irrigation Design ■

MPi Designs
P.O. BOX 345
Windsor, CO 80550
970.402.3047
Michelle@MPiDesignsllc.com

■ Engineering ■

CVL CONSULTANTS
10333 E. DRY CREEK RD. #240
ENGLEWOOD, CO 80112
720-482-9526


# TRAILS AT CROWFOOT
FILING NO. 9
PARKER, COLORADO
IRRIGATION PLANS

| | |
|---|---|
| Drawn by: | MLP |
| Checked by: | TEAM |
| Submittal Date: | 12.08.2017 |
| | 01.26.2017 |
| | 02.20.2018 |
| | 04.6.2018 |
| | 08.10.2018 |

Know what's **below.** **Call** before you dig. 811

■ Sheet Name ■
IRRIGATION PLAN

■ Sheet Number ■
IR1.8

MATCHLINE - SEE SHEET IR1.10

MATCHLINE - SEE SHEET IR1.8

BEEBALM WAY

N. PINERY PKWY
(R.O.W. WIDTH VARIES)

TRACT C

TRACT H

4 9 8 6 7

G17 2" 70

G18 1" 19

G19 1" Drip

G20 1" Tree

G16 1½" 54

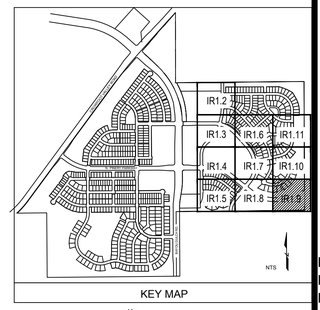
3

(2)3"¢(2)6"

(2)2"

SPRINKLERS UTILIZED CAN HOLD BACK APPROX. 14 FEET OF ELEVATION ACROSS A ZONE. THEREFORE, SPRINKLERS ARE VALVED TO AVOID EXCESSIVE LOW HEAD DRAINAGE (TYP).

NATIVE SEED AREAS ARE TO BE IRRIGATED BY A TEMPORARY HYDRANT METER SYSTEM NOT SHOWN ON THIS PLAN SET (TYP).




KEY MAP

NORTH 0 10' 20' 30' 60' SCALE: 1"=30'-0"


■ Prepared For■

E5X MANAGEMENT
7353 SOUTH ALTON WAY
CENTENNIAL, CO 80112

■ Irrigation Design ■

MPi Designs
P.O. BOX 345
Windsor, CO 80550
970.402.3047
Michelle@MPiDesignsllc.com

■ Engineering ■

CVL CONSULTANTS
10333 E. DRY CREEK RD. #240
ENGLEWOOD, CO 80112
720-482-9526


# TRAILS AT CROWFOOT
FILING NO. 9
PARKER, COLORADO

IRRIGATION PLANS

| | |
|---|---|
| Drawn by: | MLP |
| Checked by: | TEAM |
| Submittal Date: | 12.08.2017 |
| | 01.26.2017 |
| Know what's below. Call before you dig. 811 | 02.20.2018 |
| | 04.6.2018 |
| | 08.10.2018 |

■ Sheet Name ■
IRRIGATION PLAN

■ Sheet Number ■
IR1.9

C:\DROPBOX\DROPBOX\MPI DESIGNS\CLIENT FILES\E5X MANAGEMENT\TRAIL AT CROWFOOT\DESIGN FILES\SHEETS-IR-TRAILS

MATCHLINE - SEE SHEET IR1.11

MATCHLINE - SEE SHEET IR1.7

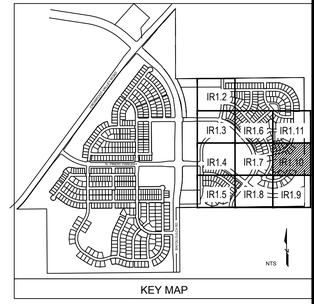
MATCHLINE - SEE SHEET IR1.9

BEEBALM WAY

TRACT J

(1)3"ϕ
(1)6"

5




KEY MAP

NORTH

0 10' 20' 30' 60'

SCALE: 1"=30'-0"

C:\DROPBOX\DROPBOX\MPI DESIGNS\CLIENT FILES\E5X MANAGEMENT\TRAIL AT CROWFOOT\DESIGN FILES\SHEETS-IR--TRAILS

■ Prepared For■

E5X MANAGEMENT
7353 SOUTH ALTON WAY
CENTENNIAL, CO 80112

■ Irrigation Design ■

MPi Designs
P.O. BOX 345
Windsor, CO 80550
970.402.3047
Michelle@MPiDesignsllc.com

■ Engineering ■

CVL CONSULTANTS
10333 E. DRY CREEK RD. #240
ENGLEWOOD, CO 80112
720-482-9526

# TRAILS AT CROWFOOT

FILING NO. 9

PARKER, COLORADO

IRRIGATION PLANS

Drawn by: MLP
Checked by: TEAM
Submittal Date: 12.08.2017
01.26.2017
02.20.2018
04.6.2018
08.10.2018

Know what's **below.** **Call** before you dig. 811

■ Sheet Name ■
IRRIGATION PLAN

■ Sheet Number ■
IR1.10

MATCHLINE - SEE SHEET IR1.6

5

(2)3"$(1)6"

CROWNVETCH CIR

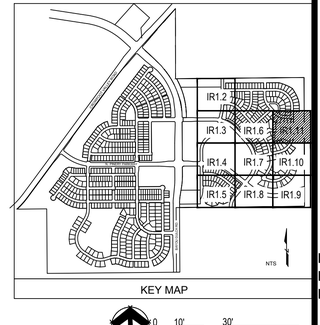
(2)3"$(1)6"

FIELD MINT TERR

REEBALM AVE

TRACT C

MATCHLINE - SEE SHEET IR1.10




KEY MAP

NORTH

0 10' 20' 30' 60'

SCALE: 1"=30'-0"

C:\DROPBOX\DROPBOX\MPI DESIGNS\CLIENT FILES\E5X MANAGEMENT\TRAIL AT CROWFOOT\DESIGN FILES\SHEETS--IR--TRAILS


■ Prepared For■

E5X MANAGEMENT
7353 SOUTH ALTON WAY
CENTENNIAL, CO 80112

■Irrigation Design■

MPI Designs
P.O. BOX 345
Windsor, CO 80550
970.402.3047
Michelle@MPiDesignsllc.com

■ Engineering ■

CVL CONSULTANTS
10333 E. DRY CREEK RD. #240
ENGLEWOOD, CO 80112
720-482-9526


# TRAILS AT CROWFOOT

FILING NO. 9

PARKER, COLORADO

IRRIGATION PLANS

Drawn by: MLP
Checked by: TEAM
Submittal Date: 12.08.2017
01.26.2017
02.20.2018
04.6.2018
08.10.2018

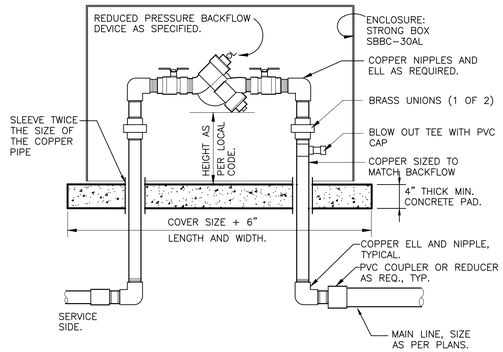
Know what's **below.** **Call** before you dig. 811

■ Sheet Name ■
IRRIGATION PLAN

■ Sheet Number ■
IR1.11

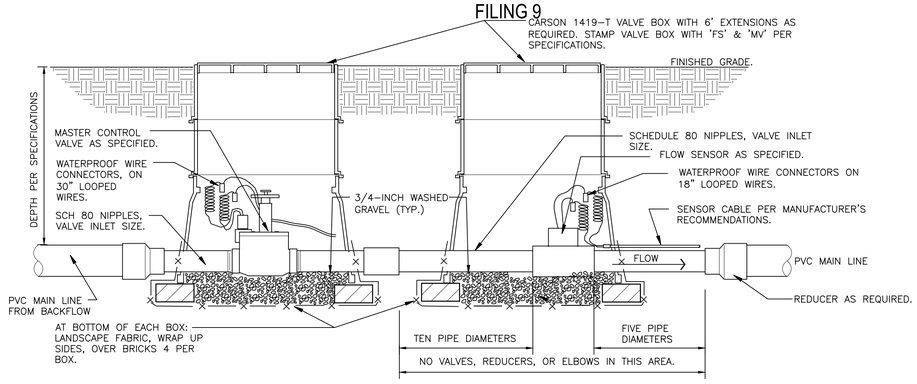
# TRAILS AT CROWFOOT

## FILING 9



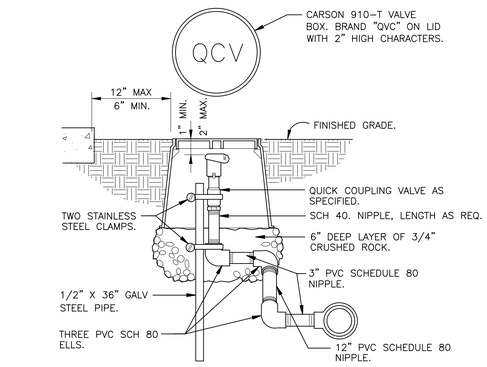

NOTES:
1. INSTALL BACKFLOW DEVICE IN ACCORDANCE WITH ALL STATE AND LOCAL CODE REQUIREMENTS.
2. SLOPE TOP SURFACE OF PAD AT 0.5 % WITH BROOM FINISH. MAKE PIPE SLEEVES WITH 1-1/2 INCH LARGER DIAMETER PIPE THAN PENETRATING PIPE SIZE.
3. ALL HINGED CONNECTION LOCATIONS AND HARDWARE TO BE TAMPER PROOF.
4. ALL WELD JOINTS SHALL BE CONTINUOUS AND GROUND SMOOTH.

### RP BACKFLOW W/ ENCLOSURE
1" = 1'-0" 328409.46-03



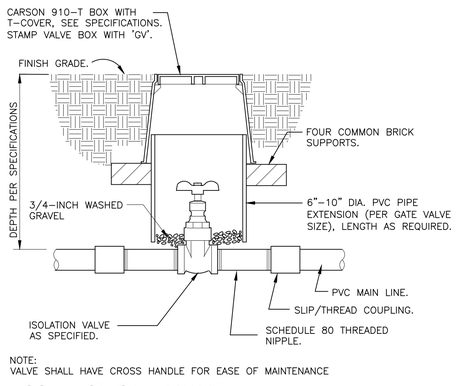

NOTE:
1. REFER TO CONTROLLER MANUFACTURER'S RECOMMENDATIONS FOR WIRING MASTER VALVE AND FLOW SENSOR.
2. SENSOR DECODER'S NOT AVAILABLE ON ALL CONTROLLERS. VALVES MAY BE DIRECTLY WIRED INTO CONTROLLER.

### MASTER VALVE/FLOW SENSOR ON DECODER
1 1/2" = 1'-0" 32 8406.23-11



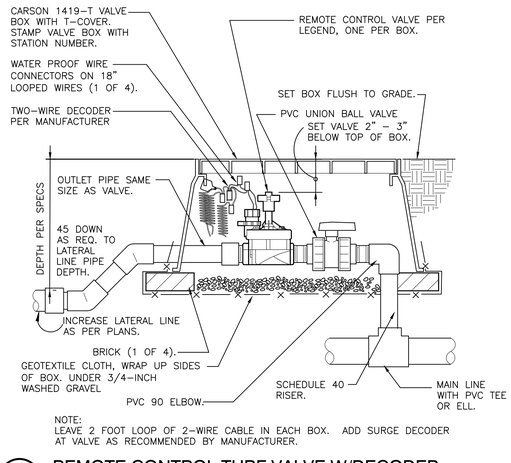

NOTE: PRE-FABRICATED SWING JOINT ASSEMBLY MAY BE UTILIZED.

### QUICK COUPLING VALVE IN BOX
1 1/2" = 1'-0" 328406.43-02



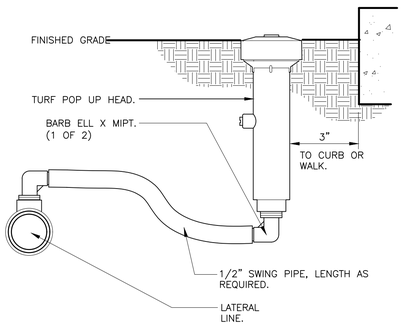

NOTE:
VALVE SHALL HAVE CROSS HANDLE FOR EASE OF MAINTENANCE

### ISOLATION GATE VALVE
1 1/2" = 1'-0" 328406.33-01



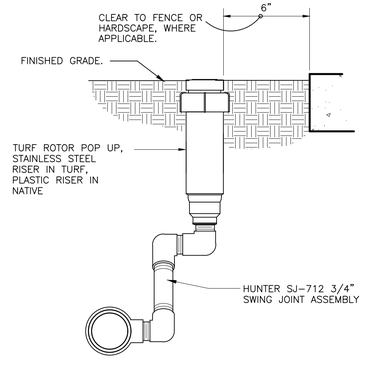

NOTE:
LEAVE 2 FOOT LOOP OF 2-WIRE CABLE IN EACH BOX. ADD SURGE DECODER AT VALVE AS RECOMMENDED BY MANUFACTURER.

### REMOTE CONTROL TURF VALVE W/DECODER
1 1/2" = 1'-0" 32 8406.13-06

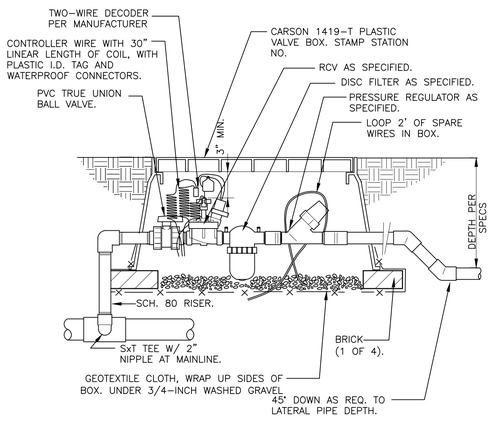



NOTES:
1. 6-INCH POP-UP RISERS SHALL BE UTILIZED IN ALL TURF/NATIVE SEEDED AREAS.
2. SIDE INLET SHALL NOT BE UTILIZED.

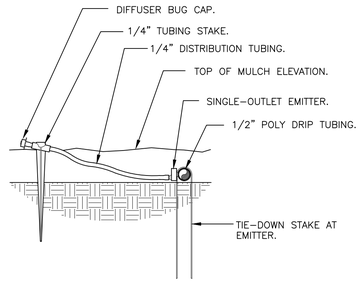
### 6-INCH POP-UP SPRAY
3" = 1'-0" 328403.13-02



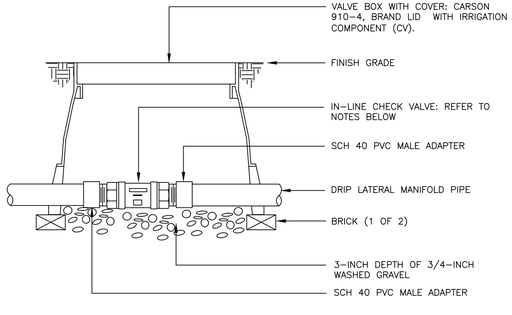

### GEAR-DRIVEN ROTOR ASSEMBLY
3" = 1'-0" 328403.16-01




### 1" DRIP VALVE W/DISC FILTER W/DECODER
1 1/2" = 1'-0" 328413.76-16




### DRIP EMITTER AT 1/4" TUBING
3" = 1'-0" 328413.13-03




NOTES:
1. DRIP LATERALS WITH MORE THAN 4 GPM SHALL UTILIZE THE HUNTER HCV IN-LINE CHECK VALVE.
2. DRIP LATERALS WITH LESS THAN 4 GPM SHALL UTILIZE THE NETAFIM TLCV050M1-B IN-LINE CHECK VALVE.

### INLINE CHECK VALVE ASSEMBLY
N.T.S. 328413.49-34


■ Prepared For■

E5X MANAGEMENT
7353 SOUTH ALTON WAY
CENTENNIAL, CO 80112

■ Irrigation Design ■

MPI Designs
P.O. BOX 345
Windsor, CO 80550
970.402.3047
Michelle@MPiDesignsllc.com

■ Engineering ■

CVL CONSULTANTS
10333 E. DRY CREEK RD. #240
ENGLEWOOD, CO 80112
720-482-9526


TRAILS AT CROWFOOT
FILING NO. 9
PARKER, COLORADO
IRRIGATION PLANS

Drawn by: MLP
Checked by: TEAM
Submittal Date: 12.08.2017
01.26.2017
02.20.2018
04.6.2018
08.10.2018

Know what's below. Call before you dig. 811

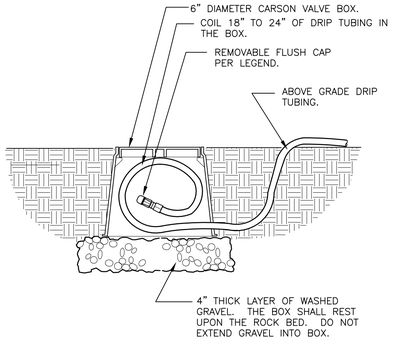
■ Sheet Name ■
IRRIGATION DETAILS

■ Sheet Number ■
IR2.1

C:\DROPBOX\DROPBOX\MPI DESIGNS\CLIENT FILES\E5X MANAGEMENT\TRAIL AT CROWFOOT\DESIGN FILES\SHEETS--IR--TRAILS

# TRAILS AT CROWFOOT

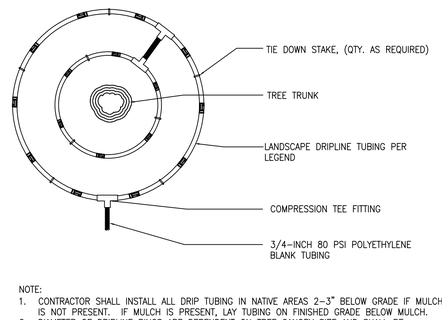
FILING 9




1. LOCATE FLUSH CAP ASSEMBLY AT THE END OF EACH DRIP LINE.
2. ENSURE THAT THE COILED DRIP TUBING IS OF SUFFICIENT LENGTH TO COMPLETELY EXTEND OUT OF THE VALVE BOX WHEN FLUSHING.

## DRIP FLUSH CAP ASSEMBLY

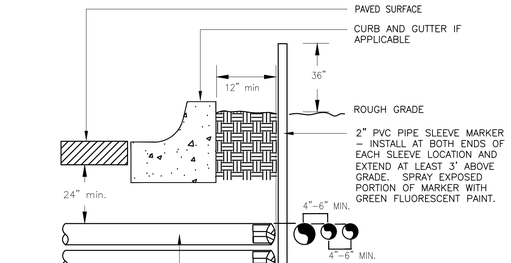
1 1/2" = 1'-0" 328413.49-06




NOTE:
1. CONTRACTOR SHALL INSTALL ALL DRIP TUBING IN NATIVE AREAS 2-3" BELOW GRADE IF MULCH IS NOT PRESENT. IF MULCH IS PRESENT, LAY TUBING ON FINISHED GRADE BELOW MULCH.
2. DIAMETER OF DRIPLINE RINGS ARE DEPENDENT ON TREE CANOPY SIZE AND SHALL BE ADJUSTED IN THE FIELD PER CONTRACTOR. SUGGESTED PLACEMENT OF 3' DIAMTER AND 5' DIAMTER AROUND TREE.
3. SHRUBS IN NATIVE SHALL UTILIZE A SINGLE TREE RING (UTILIZE INNER RING SHOWN ABOVE).
4. TREE RINGS CAN BE UTILIZED ON TREES IN SHRUB BEDS.

## INLINE DRIP RING FOR PLANTS IN NATIVE

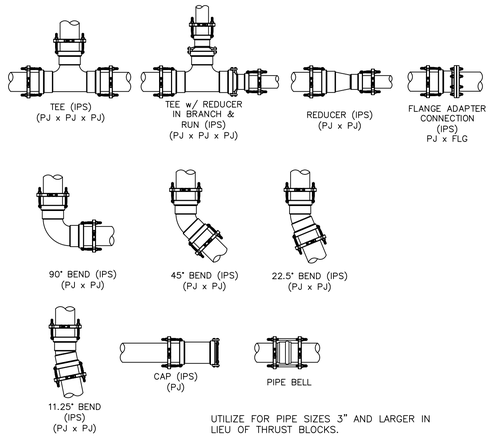
N.T.S. 328413.56-40




NOTE:
1) ALL SLEEVING TO B E CLASS 200 BE PVC, SIZED AS NOTED.
2) INSATLL SLEEVES IN SIDE-BY-SIDE CONFIGURATION WHERE MULTIPPLE SLEEVES ARE TO BE INSTALLED. SPACE SLEEVES 4" TO 6" APART. DO NOT STACK SLEEVES VERTICALLY.

## TYPICAL SLEEVE

N.T.S. 328409.76-21

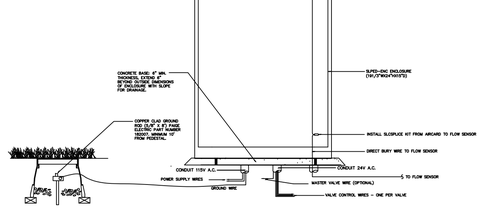



UTILIZE FOR PIPE SIZES 3" AND LARGER IN LIEU OF THRUST BLOCKS.

## PIPE FITTING WITH JOINT RESTRAINT

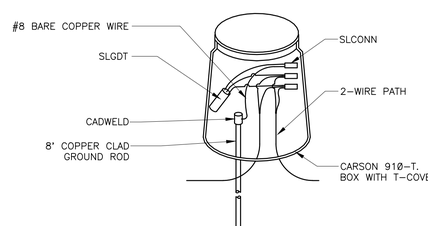
N.T.S. 328409.76-22

NOTES:
1. INSTALL ALL WIRING PER LOCAL ELECTRICAL CODES.
2. INSTALL GROUND ROD WITHIN IRRIGATED TURF AREA. IF IRRIGATED TURF AREA IS NOT IN CLOSE PROXIMITY TO CONTROLLER, INSTALL ONE (1) DRIP EMITTER FROM NEAREST DRIP VALVE IN VALVE BOX HOUSING GROUNDING ROD.




## WEATHERMATIC PEDESTAL MOUNT CONTROLLER

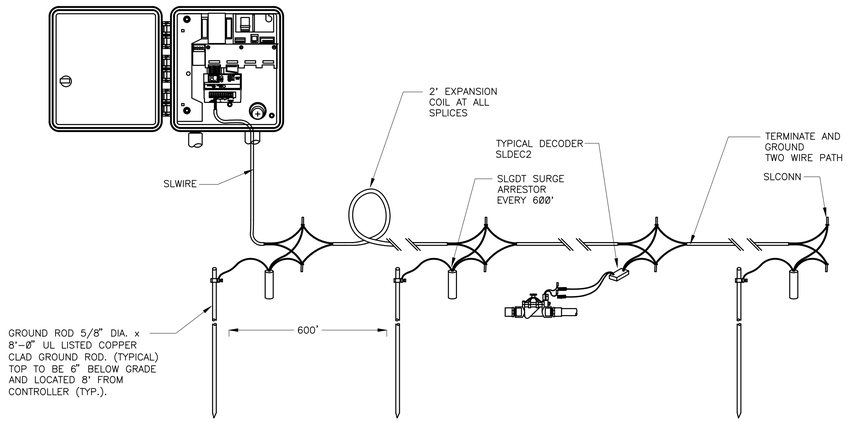
N.T.S. 328409.16-26




NOTES:
1. ALL ELECTRICAL WORK MUST CONFORM TO LOCAL CODES. REFER TO PRODUCT LITERATURE FOR ADDITIONAL INSTALLATION REQUIREMENTS.
2. INSTALL EVERY 600', AT CONTROLLER, AND END OF EVERY MAINLINE RUN. NOT SHOWN ON DESIGN PLANS.

## LIGHTNING ARRESTOR

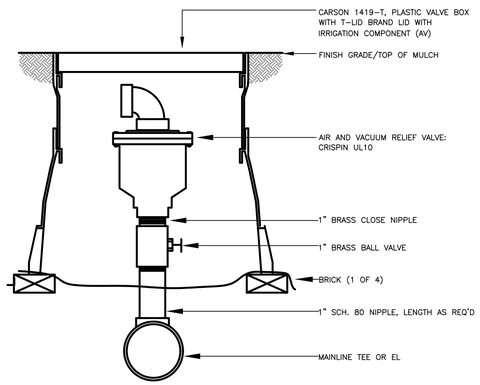
N.T.S. 328409.16-21




GROUND ROD 5/8" DIA. x 8'-0" UL LISTED COPPER CLAD GROUND ROD. (TYPICAL) TOP TO BE 6" BELOW GRADE AND LOCATED 8' FROM CONTROLLER (TYP.).

## TYPICAL LIGHTNING ARRESTOR LAYOUT

N.T.S. 328409.16-20




## AIR/VACUM RELIEF VALVE

N.T.S. 32 8406.15-01


■ Prepared For■

E5X MANAGEMENT
7353 SOUTH ALTON WAY
CENTENNIAL, CO 80112

■ Irrigation Design ■

MPi Designs
P.O. BOX 345
Windsor, CO 80550
970.402.3047
Michelle@MPiDesignsllc.com

■ Engineering ■

CVL CONSULTANTS
10333 E. DRY CREEK RD. #240
ENGLEWOOD, CO 80112
720-482-9526


TRAILS AT CROWFOOT
FILING NO. 9
PARKER, COLORADO
IRRIGATION PLANS

Drawn by: MLP
Checked by: TEAM
Submittal Date: 12.08.2017
01.26.2017
02.20.2018
04.6.2018
08.10.2018

Know what's **below.** **Call** before you dig. 811

■ Sheet Name ■
IRRIGATION DETAILS

■ Sheet Number ■
IR2.2

C:\DROPBOX\DROPBOX\MPI DESIGNS\CLIENT FILES\E5X MANAGEMENT\TRAIL AT CROWFOOT\DESIGN FILES\SHEETS-IR-TRAILS