TRAILS AT CROWFOOT

FILING 10 UTILITY CONSTRUCTION PLANS

SECTIONS 4, 8, AND 9 TOWNSHIP 7 SOUTH, RANGE 66 WEST OF THE SIXTH PRINCIPAL MERIDIAN COUNTY OF DOUGLAS, STATE OF COLORADO

Sheet List Table

Sheet Number	Sheet Title
1	COVER SHEET
2	PARKER WATER AND SANITATION NOTES
3	AREA UTILITY PLAN
4	SANITARY P&P BEEBALM AVENUE
5	SANITARY P&P BEEBALM AVENUE
6	SANITARY P&P ALPINE PHLOX LANE
7	SANITARY P&P BEEBALM TRAIL
8	SANITARY P&P COPPERMALLOW TRAIL
9	SANITARY P&P CROWNVETCH CIRCLE
10	SANITARY P&P GRAY ASTER LOOP
11	SANITARY P&P ALPINE DAISY CIRCLE
12	WATER P&P BEEBALM AVENUE
13	WATER P&P BEEBALM AVENUE
14	WATER P&P ALPINE PHLOX LANE
15	WATER P&P BEEBALM TRAIL
16	WATER P&P COPPERMALLOW TRAIL
17	WATER P&P CROWNVETCH CIRCLE
18	WATER P&P GRAY ASTER LOOP
19	WATER P&P ALPINE DAISY CIRCLE
20	SANITARY SEWER DETAILS
21	SANITARY SEWER DETAILS
22	SANITARY SEWER DETAILS
23	WATER DETAILS
24	WATER DETAILS
25	WATER DETAILS
26	WATER DETAILS
27	WATER DETAILS
28	WATER DETAILS

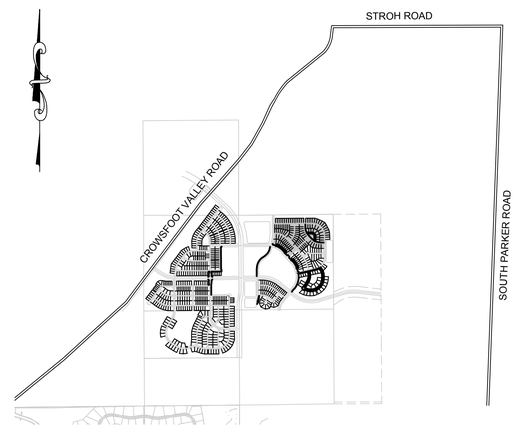

VICINITY MAP
SCALE: 1" = 2000'

MATERIALS LIST

DESCRIPTION	QUANTITY	UNIT
8" WATERPIPE (C900)	1,852	L.F.
6" WATERPIPE (DIP-FIRE HYDRANT LINE)	67	L.F.
8" GATE VALVE W/ BOX	8	EA.
6" GATE VALVE W/ BOX	4	EA.
FIRE HYDRANT ASSEMBLY	4	EA.
8" BEND	8	EA.
8" TEE	8	EA.
WATER SERVICE LATERAL W/ WATER METER AND PIT	47	EA.
8" SEWER (SDR-35 PVC)	1,736	L.F.
4' DIA. MANHOLE	12	EA.
SEWER SERVICE LATERAL W/ WYE TAP	47	EA.

FIRE DEPARTMENT APPROVAL

ALL FIRE HYDRANTS SHALL BE INSTALLED ACCORDING TO WATER UTILITY STANDARDS. THE NUMBER AND LOCATIONS OF THE FIRE HYDRANTS AS SHOWN ON THE OVERALL UTILITY PLAN ARE CORRECT AS SPECIFIED BY THE TOWN OF PARKER, COMMUNITY DEVELOPMENT DEPARTMENT.

_____ _____
(FIRE CODE OFFICIAL OR DESIGNATED REPRESENTATIVE) DATE

(NOTE- UNDERGROUND FIRE LINE (UFL) SUBMITTAL DOCUMENTS MUST MEET THE REQUIREMENTS OF NFPA24 WHEN SUBMITTING FOR REVIEW.)

THE DISTRICT INSPECTOR MUST BE NOTIFIED AT LEAST 48 HOURS PRIOR TO START OF CONSTRUCTION. CALL PARKER WATER AND SANITATION DISTRICT AT 303-841-4627. THE DISTRICT WILL PROVIDE PERIODIC INSPECTIONS OF THE WORK. 24 HOUR NOTICE TO THE INSPECTOR IS REQUIRED FOR SCHEDULINE INSPECTIONS.
ANY WORK ACCOMPLISHED WITHOUT THE APPROVAL OF THE INSPECTOR WILL BE SUBJECT TO REJECTION.

REVIEWED FOR CONFORMANCE TO PARKER WATER AND SANITATION DISTRICT STANDARDS.

BY: _____
(DISTRICT REPRESENTATIVE)

DATE SIGNED: _____

APPROVED FOR CONSTRUCTION:
PARKER WATER AND SANITATION DISTRICT

BY: _____
(DISTRICT ENGINEER)

DATE SIGNED: _____

DEVELOPER

E5X MANAGEMENT
7353 SOUTH ALTON WAY
CENTENNIAL, CO 80112
TEL: (303) 770-9111
CONTACT: MATT JANKE

PLANNER/ LANDSCAPE DESIGNER:

PCS GROUP, INC.
200 KALAMATH STREET
DENVER, CO 80233
TEL: (303) 531-4905
CONTACT: JOHN PRESTWICH

SURVEYOR/ ENGINEER:

CVL CONSULTANTS OF COLORADO, INC.
10333 E. DRY CREEK RD. STE 240
ENGLEWOOD, CO 80112
TEL: (720) 482-9526
CONTACT: JIM JANNICKE

UTILITY DISTRICT

PARKER WATER AND SANITATION DISTRICT
18100 E. WOODMAN DRIVE
PARKER, CO 80134
TEL: (303) 841-4627

CALL 811
TWO WORKING DAYS
BEFORE YOU DIG
UNCC UTILITY NOTIFICATION CENTER OF COLORADO 1-800-922-1987

BENCHMARK
DOUGLAS COUNTY CONTROL POINT KNOWN AS 1.060032, BEING A 3-1/4" ALUMINUM CAP, BEING LOCATED IN THE SOUTHWEST QUARTER OF SECTION 33, TOWNSHIP 6 SOUTH, RANGE 66 WEST OF THE SIXTH PRINCIPAL MERIDIAN, HAVING A PUBLISHED ELEVATION OF 1799.2870 METERS (5903.13 FEET) NAVD '88 DATUM.

BASIS OF BEARINGS:
THE EAST LINE OF THE NORTHEAST QUARTER OF SAID SECTION 9 BEING MONUMENTED AT THE NORTHEAST CORNER OF SAID SECTION 9 BY A 3-1/4" ALUMINUM CAP STAMPED LS 23053 AND AT THE EAST QUARTER CORNER OF SAID SECTION 9 BY A 2-1/2" ALUMINUM CAP STAMPED LS 6935 BEING CONSIDERED TO BEAR SOUTH 00°15'06" EAST, 2648.70 FEET.

PREPARED UNDER THE SUPERVISION OF

BRIAN P. WILSON
COLORADO P.E. 0050067

No.	Revisions	Date	Init.	Appr.	Date

CVL CONSULTANTS
10333 E. Dry Creek Rd.
Suite 240
Englewood, CO 80112
Tel: (720) 482-9526
Fax: (720) 482-9546

E5X MANAGEMENT
7353 South Alton Way
CENTENNIAL, CO 80112

TRAILS AT CROWFOOT
FILING 10 CONSTRUCTION DRAWINGS
COVER SHEET

SCALE: AS SHOWN
FILE NO: 8130283701
DRAWN BY: KJD
CHECKED BY: JJJ
DATE: SEPTEMBER 2017
SHEET NUMBER 1

N:\PROJECTS\HESS RANCH\CAD\ENGINEERING\SHEET SETS\CD'S\F10\PARKER WATER AND SANITATION\F10 COVER.DWG, CODYA, 8/23/2017 2:42 PM

GENERAL NOTES:

1. ALL CONSTRUCTION SHALL COMPLY WITH PARKER WATER AND SANITATION DISTRICT SPECIFICATIONS.
2. THE CONTRACTOR SHALL CONTACT ALL APPROPRIATE UTILITY COMPANIES AND THE TOWN OF PARKER PRIOR TO THE BEGINNING OF ANY CONSTRUCTION. CONTRACTOR SHALL BE RESPONSIBLE FOR LOCATING ANY EXISTING UTILITY (INCLUDING DEPTHS) WHICH MAY CONFLICT WITH THE PROPOSED CONSTRUCTION. ALL EXISTING UTILITIES SHALL BE PROTECTED FROM DAMAGE BY THE CONTRACTOR. DAMAGED UTILITIES SHALL BE REPAIRED BY THE CONTRACTOR AT HIS OWN EXPENSE.
3. ALL ITEMS SHOWN ON THE PLANS AS EXISTING ARE SHOWN IN APPROXIMATE LOCATIONS ONLY. THE ACTUAL LOCATIONS MAY VARY FROM THE PLANS, ESPECIALLY IN THE CASE OF UNDERGROUND UTILITIES. WHENEVER CONTRACTOR DISCOVERS A DISCREPANCY IN LOCATIONS, HE SHALL CONTACT THE ENGINEER IMMEDIATELY.
4. THE DISTRICT ENGINEER AND OTHER APPROVING AGENCIES ARE TO BE NOTIFIED AT LEAST 48 HOURS PRIOR TO CONSTRUCTION.
5. THE CONTRACTOR SHALL OBTAIN, AT HIS EXPENSE, ALL PERMITS THAT ARE NECESSARY TO PERFORM THE PROPOSED WORK.
6. ALL CONCRETE SHALL BE A MINIMUM OF CLASS A, 6 SACK, TYPE II, 3000-POUND COMPRESSION STRENGTH.
7. THE DESIGN ENGINEER SHALL SUBMIT ONE (1) SET OF ROLLED "AS-BUILT" BLUELINE PRINTS AND ELECTRONIC FILES TO THE DISTRICT ENGINEER FOR APPROVAL PRIOR TO PRINTING MYLAR SEPIAS FOR THE DISTRICT. AFTER APPROVAL HAS BEEN GRANTED BY THE DISTRICT ENGINEER, FULL SIZE MYLAR SEPIA PRINTS SHALL BE TRANSMITTED TO THE PARKER WATER AND SANITATION DISTRICT OFFICE.
8. ALL BACKFILL MATERIAL SHALL BE COMPACTED TO 95% STANDARD PROCTOR DENSITY. COMPACTION TESTS MUST BE SUBMITTED TO DISTRICT ENGINEER PRIOR TO PROBATIONARY ACCEPTANCE.
9. TRENCHES SHALL BE EXCAVATED AND THE PIPE EXPOSED FOR THE INSPECTION AT ANY LOCATION ON THE PROJECT IF SO ORDERED BY THE INSPECTOR.
10. THE CONTRACTOR WILL BE HELD RESPONSIBLE FOR THE PROPER FUNCTIONING OF LINES (WATER AND SEWER) FOR UP TO TWO (2) YEARS FROM THE DATE OF PROBATIONARY ACCEPTANCE OF THE LINES BY THE DISTRICT. ANY MALFUNCTION DURING THIS PERIOD OF GUARANTEE SHALL BE REMEDIED BY THE CONTRACTOR TO THE SATISFACTION OF THE DISTRICT ENGINEER AT NO EXPENSE TO THE DISTRICT.
11. SURFACE GRADES ARE TO BE WITHIN PLUS OR MINUS ONE FOOT OF FINISHED GRADE AND VERIFICATION OF COMPACTION RESULTS OBTAINED PRIOR TO THE INSTALLATION OF WATER AND SEWER LINES. RESULTS MUST BE SUBMITTED TO THE DISTRICT ENGINEER.
12. NO WORK SHALL BE BACKFILLED UNTIL THE CONSTRUCTION HAS BEEN INSPECTED AND APPROVED FOR BACKFILLING BY THE DISTRICT ENGINEER OR REPRESENTATIVE OF THE DISTRICT ENGINEER.
13. ALL SERVICES WILL BE PERMANENTLY MARKED ON CURB FACE AS FOLLOWS: "X" FOR SANITARY SERVICE SEWERS "V" FOR WATER SERVICES
14. NO TREES SHALL BE ALLOWED IN EASEMENTS OR WITHIN 8' OF ANY WATER OR SANITARY SEWER MAINS IN RIGHT OF WAY.
15. THE CONTRACTOR SHALL HAVE IN HIS POSSESSION AT ALL TIMES ONE (1) SIGNED COPY OF THE PLANS WHICH HAVE BEEN APPROVED BY THE PARKER WATER AND SANITATION DISTRICT AND THE DISTRICT ENGINEER AND ONE (1) COPY OF THE LATEST PARKER WATER AND SANITATION DISTRICT SPECIFICATION MANUAL.

WATER MAIN NOTES:

1. ALL MATERIALS AND WORKMANSHIP SHALL BE IN CONFORMANCE WITH THE PARKER WATER AND SANITATION DISTRICT ENGINEERING STANDARDS AND SPECIFICATIONS, LATEST REVISIONS. ALL WORK SHALL BE INSPECTED AND APPROVED BY PERSONNEL OF THE PARKER WATER SANITATION DISTRICT AND THE DISTRICT ENGINEER.
2. ALL WATER MAINS SHALL BE PER PWSD MATERIALS SPECIFICATIONS.
3. ALL BENDS, PLUGS, REDUCERS, AND FIRE HYDRANTS TO BE RODDED OR MEGA-LUGGED. ALL FITTINGS SHALL BE WRAPPED WITH 8-MIL MINIMUM THICKNESS POLYETHYLENE MATERIAL PER PWSD MATERIALS SPECIFICATIONS.
4. THERE SHALL BE A MINIMUM COVER OF 4.5 FEET OVER ALL WATER MAINS.
5. FIRE HYDRANTS SHALL CONFORM TO AWWA C-502 "DRY BARREL FIRE HYDRANTS" PIPE HYDRANT ASSEMBLIES SHALL INCLUDE ALL PIPE, FITTINGS, VALVES, MATERIALS, AND LABOR WHICH ARE NECESSARY TO INSTALL THE HYDRANT COMPLETE IN PLACE. SEE MATERIALS SPECIFICATIONS FOR APPROVED MODELS
6. ALL BENDS, TEES, FIRE HYDRANTS, BLOW-OFFS AND PLUGS AT DEAD END MAINS SHALL BE PROTECTED FROM THRUST BY USING CONCRETE THRUST BLOCKS.
7. PRECAUTIONS SHALL BE TAKEN TO PROTECT THE INTERIOR OF PIPES, FITTINGS, AND VALVES AGAINST CONTAMINATION. ALL OPENINGS IN THE PIPELINE SHALL BE CLOSED WITH WATERTIGHT PLUGS WHEN PIPE LAYING IS STOPPED AT THE CLOSE OF THE DAY'S WORK OR FOR OTHER REASONS, SUCH AS REST BREAKS OR MEAL PERIODS. THE MORE CLOSELY THE RATE OF DELIVERY IS CORRELATED TO THE RATE OF PIPE LAYING, THE LOWER THE RISK OF CONTAMINATION.
8. CHLORINATION AND FLUSHING: ALL WATER MAINS SHALL BE INSTALLED AND CHLORINATED PER PARKER WATER AND SANITATION STANDARDS AND SPECIFICATIONS. THE LINES SHALL BE CHLORINATED IN ACCORDANCE WITH ANSI/AWWA C-651-92., "DISINFECTING WATER MAINS." PARKER WATER AND SANITATION DISTRICT REQUIRES THE INITIAL DOSAGE RATE OF DISINFECTION BE AT LEAST 50 MG PER LITER. CHLORINE TABLETS SHOULD BE ADHERED TO THE TOP OF THE PIPE SECTION WITH PERMATEX NO.1 (RED). THE CHLORINATION OF ANY FINISHED PIPELINE SHALL BE DONE PRIOR TO THE HYDROSTATIC TESTING.
9. HYDROSTATIC TESTING: ALL WATER MAINS SHALL BE TESTED PER THE REQUIREMENTS OF THE PARKER WATER AND SANITATION DISTRICT STANDARDS AND SPECIFICATIONS. ALL PIPE SHALL BE FIELD PRESSURE TESTED TO A MINIMUM OF 150 PSI. ALL TESTING SHALL BE DONE IN THE PRESENCE OF A PARKER WATER AND SANITATION DISTRICT INSPECTOR. LEAKAGE FOR EACH SECTION OF PIPE BETWEEN LINES VALVES SHALL NOT EXCEED THE LIMITS SET FOURTH IN THE PARKER WATER AND SANITATION DISTRICT STANDARDS AND SPECIFICATIONS.
10. VALVES IN STREETS ARE TO BE LOCATED AT PROPERTY LINE EXTENSIONS EXCEPT FOR TAPPING TEES WHERE AN ADDITIONAL VALVES SHALL BE PLACED ON THE TAPPING TEE. OTHER VALVE LOCATIONS, SUCH AS WHERE CROSS PANS EXIST, ARE SHOWN ON THE PLANS.
11. WHEN NECESSARY TO LOWER OR RAISE WATER LINES AT STORM DRAINS AND OTHER UTILITY CROSSING, A MINIMUM CLEARANCE OF 1.50 FEET SHALL BE MAINTAINED BETWEEN OUTSIDE OF PIPES.
12. THE CONTRACTOR SHALL NOTIFY THE PARKER WATER AND SANITATION DISTRICT AND THE DISTRICT ENGINEER AT LEAST 48 HOURS PRIOR TO ANY CONSTRUCTION. IF WORK IS SUSPENDED FOR ANY PERIOD OF TIME AFTER INITIAL START-UP, THE CONTRACTOR MUST NOTIFY THE DISTRICT ENGINEER 48 HOURS PRIOR TO RE-START.
13. PIPE BEDDING SHALL BE A CLEAN, WELL-GRADED SAND OR SQUEEGEE SAND IN ACCORDANCE WITH PARKER WATER AND SANITATION DISTRICT STANDARDS AND SPECIFICATIONS, LATEST REVISION.
14. THE CONTRACTOR SHALL NOTIFY THE PUBLIC UTILITY COMPANIES AND DETERMINED THE LOCATION OF ALL EXISTING UNDERGROUND UTILITIES PRIOR TO PROCEEDING WITH THE EXCAVATION. ALL WORK PERFORMED IN THE AREA OF THE PUBLIC UTILITIES SHALL BE PERFORMED ACCORDING TO THE REQUIREMENTS OF THESE AGENCIES.
15. COMPACTION OF ALL TRENCHES MUST BE ATTAINED IN ACCORDANCE WITH THE SOILS REPORTS AND COMPACTION TEST RESULTS SUBMITTED TO THE DISTRICT ENGINEER PRIOR TO PROBATIONARY ACCEPTANCE.
16. VALVE BOXES: TYLER SCREW-TYPE 6 INCHES CAST IRON VALVE BOX ASSEMBLY SERIES 6860 WITH NO. 160 OVAL BASE. CLAY AND BAILEY SCREW-TYPE 6 INCH CAST IRON VALVE BOX ASSEMBLY NO. P-108 WITH NO. 106 LARGE OVAL BASE.
17. ALL PIPE LENGTHS ARE APPROXIMATE.
18. AT LEAST FIVE (5) DAYS PRIOR TO THE START OF CONSTRUCTION, A PRE-CONSTRUCTION MEETING WILL BE HELD AT THE OFFICE OF THE DISTRICT ENGINEER AND ATTENDED BY THE CONTRACTOR AND REPRESENTATIVE OF OTHER APPROVING AGENCIES. IT WILL BE THE RESPONSIBILITY OF THE CONTRACTOR TO CONTACT THE DISTRICT ENGINEER.

SANITARY SEWER NOTES:

1. ALL SANITARY SEWER CONSTRUCTION SHALL CONFORM TO THE PARKER WATER AND SANITATION DISTRICT SPECIFICATION.
2. ALL SEWER MAINS SHALL BE PVC, ASTM D-3034, SDR 35 OR APPROVED EQUAL. ALL SEWER MAIN SIZE IS 8" IN DIAMETER UNLESS OTHERWISE NOTED.
3. SEWER LINES SHALL BE INSTALLED 5.0 FEET SOUTH OR WEST OF STREET CENTERLINE, UNLESS OTHERWISE SHOWN ON PLANS. SEWER LINES SHALL BE 10.00 FEET FROM WATER LINES EXCEPT WHEN CROSSING EACH OTHER. SEWER LINES WHICH CROSS LESS THAN 1.50 FEET VERTICALLY FROM THE WATER MAIN SHALL BE ENCASED IN CONCRETE AS PER PARKER WATER AND SANITATION DISTRICT STANDARD AND SPECIFICATIONS. USE RUBBER GASKETS FOR PVC ENCASEMENT.
4. SEWER RIM ELEVATIONS SHOWN ARE APPROPRIATE ONLY AND ARE NOT TO BE TAKEN AS FINAL ELEVATIONS. RING AND COVER SHALL BE SET IN CENTERED CONCRETE RINGS WITH RAM-NECK FOR ADJUSTMENT TO MATCH FINAL PAVEMENT ELEVATIONS.
5. THE CONTRACTOR AND SURVEY CREW SHALL VERIFY ELEVATIONS OF EXISTING SEWER LINES AND MANHOLES TO BE TIED TO PRIOR TO CONSTRUCTION OR STAKING OF SANITARY SEWER.
6. NO UNDERDRAIN SYSTEM WILL BE ALLOWED TO BE PLACED IN MAINLINE OR SEWER SERVICE TRENCHES.
7. SEWER SERVICE TEES FOR EACH UNIT SHALL BE STAKED BY A SURVEY CREW AND FURNISHED AND INSTALLED BY THE CONTRACTOR. THE CONTRACTOR SHALL FURNISH TO THE ENGINEER "AS CONSTRUCTED" LOCATION OF TEES. SEWER WYES SHALL BE USED RATHER THAN TEES.
8. ALL MANHOLES SHALL BE 48-INCHES IN DIAMETER WITH 24-INCH RING AND COVER, ECCENTRIC CONE UNLESS OTHERWISE SPECIFIED.
9. PIPE BEDDING SHALL BE CLASS "B" AND SHALL CONFORM TO ASTM C-33 OR D-448 GRADATION NO. 6 OR NO. 67.
10. AT LEAST FIVE (5) DAYS PRIOR TO THE START OF CONSTRUCTION, A PRE-CONSTRUCTION MEETING WILL BE HELD AT THE OFFICE OF THE DISTRICT ENGINEER AND ATTENDED BY THE CONTRACTOR AND REPRESENTATIVES OF THE OTHER APPROVING AGENCIES. IT WILL BE THE RESPONSIBILITY OF THE CONTRACTOR TO CONTACT THE DISTRICT ENGINEER TO SCHEDULE THIS MEETING.
11. ALL PIPE LENGTHS ARE APPROXIMATE.
12. THE CONTRACTOR SHALL HAVE IN HIS POSSESSION AT ALL TIMES ONE (1) SIGNED COPY OF THE PLANS WHICH HAVE BEEN APPROVED BY THE PARKER WATER AND SANITATION DISTRICT AND THE DISTRICT ENGINEER AND ONE (1) COPY OF THE LATEST PARKER WATER AND SANITATION DISTRICT SPECIFICATION MANUAL.
13. ALL MANHOLES SHALL HAVE SHAPED INVERTS.
14. ALL SEWER LINES SHALL BE TESTED IN ACCORDANCE WITH THE PARKER WATER AND SANITATION DISTRICT STANDARDS AND SPECIFICATIONS PRIOR TO ACCEPTANCE OR ANY CONNECTION TO AN EXISTING SEWER LINE.
15. PRIOR TO START WORK WHERE SEWER MAIN TO BE INSTALLED INTO EXISTING DISTRICT SEWER SYSTEMS. THE NEAREST MANHOLE TO THE POINT OF TIE-IN SHALL BE PLUGGED WITH A PLUMBER'S PLUG ON THE INLET SIDE BY THE CONTRACTOR. THIS PLUG SHALL REMAIN IN PLACE UNTIL FINAL ACCEPTANCE BY THE DISTRICT. ITS PURPOSE SHALL BE TO PREVENT ANY MUD, WATER OR OTHER MATERIALS FROM ENTERING THE LINE DURING CONSTRUCTION. THE CONTRACTOR SHALL BE RESPONSIBLE FOR PUMPING AND CLEANING THESE MANHOLES AND REMOVING THE PLUG WHEN SO INSTRUCTED BY THE DISTRICT.
16. PRIOR TO PROBATIONARY ACCEPTANCE WALK-THROUGH, THE CLIENT SHALL JET CLEAN THE ENTIRE SANITARY SEWER SYSTEM AND PUMP OUT AT THE PLUGGED MANHOLE.

DISTRICT ACCEPTANCE NOTES:

1. UPON COMPLETION OF SANITARY SEWER AND WATER CONSTRUCTION AND TESTING, THE DEVELOPER OR CONTRACTOR SHALL CONTACT THE DISTRICT FOR PROBATIONARY ACCEPTANCE INSPECTION. A PUNCHLIST WILL BE PROVIDED THE DEVELOPER AND CONTRACTOR UPON COMPLETION OF THE INITIAL WALK-THRU AND PROBATIONARY ACCEPTANCE WILL BE ISSUED FOLLOWING COMPLETION AND ACCEPTANCE OF THE WORK OUTLINED IN THE PUNCHLIST.
2. THE CONTRACTOR WILL BE HELD RESPONSIBLE FOR THE PROPER FUNCTIONING OF THE LINES FOR UP TO TWO (2) YEARS FROM THE DATE OF PROBATIONARY ACCEPTANCE OF THE LINES BY THE DISTRICT. ANY MALFUNCTION DURING THIS PERIOD OF GUARANTEE SHALL BE REMEDIED BY THE CONTRACTOR TO THE SATISFACTION OF THE DISTRICT ENGINEER AT NO EXPENSE TO THE DISTRICT.
3. THE DATE OF FINAL ACCEPTANCE WILL BE INDICATED IN THE CONDITIONS OF THE PROBATIONARY ACCEPTANCE LETTER. THE DEVELOPER SHALL BE RESPONSIBLE FOR CONTACTING THE DISTRICT FOR FINAL INSPECTION AND FINAL ACCEPTANCE.

CALL 811
TWO WORKING DAYS
BEFORE YOU DIG
1-800-922-1987
UNCC
UTILITY NOTIFICATION CENTER OF COLORADO

BENCHMARK
DOUGLAS COUNTY CONTROL POINT KNOWN AS 1.060032, BEING A 3-1/4" ALUMINUM CAP, BEING LOCATED IN THE SOUTHWEST QUARTER OF SECTION 33, TOWNSHIP 6 SOUTH, RANGE 66 WEST OF THE SIXTH PRINCIPAL MERIDIAN, HAVING A PUBLISHED ELEVATION OF 1799.2870 METERS (5903.13 FEET) NAVD '88 DATUM.

BASIS OF BEARINGS:
THE EAST LINE OF THE NORTHEAST QUARTER OF SAID SECTION 9 BEING MONUMENTED AT THE NORTHEAST CORNER OF SAID SECTION 9 BY A 3-1/4" ALUMINUM CAP STAMPED LS 23053 AND AT THE EAST QUARTER CORNER OF SAID SECTION 9 BY A 2-1/2" ALUMINUM CAP STAMPED LS 6935 BEING CONSIDERED TO BEAR SOUTH 00°15'06" EAST, 2648.70 FEET.

PREPARED UNDER THE SUPERVISION OF

BRIAN P. WILSON
COLORADO P.E. 0050067

No.	Revisions	Date	Init.	Appr.	Date

CVL CONSULTANTS
10333 E. Dry Creek Rd.
Suite 240
Englewood, CO 80112
Tel: (720) 482-9526
Fax: (720) 482-9546

E5X MANAGEMENT
7353 South Alton Way
CENTENNIAL, CO 80112

TRAILS AT CROWFOOT
FILING 10 CONSTRUCTION DRAWINGS
PARKER WATER AND SANITATION NOTES

SCALE: AS SHOWN
DRAWN BY: KJD
CHECKED BY: JJJ
DATE: SEPTEMBER 2017
FILE NO: 8130283701
SHEET NUMBER 2

N:\PROJECTS\HESS RANCH\CAD\ENGINEERING\SHEET SETS\CD'S\F10\PARKER WATER AND SANITATION\F10 COVER.DWG, CODYA, 8/23/2017 2:42 PM

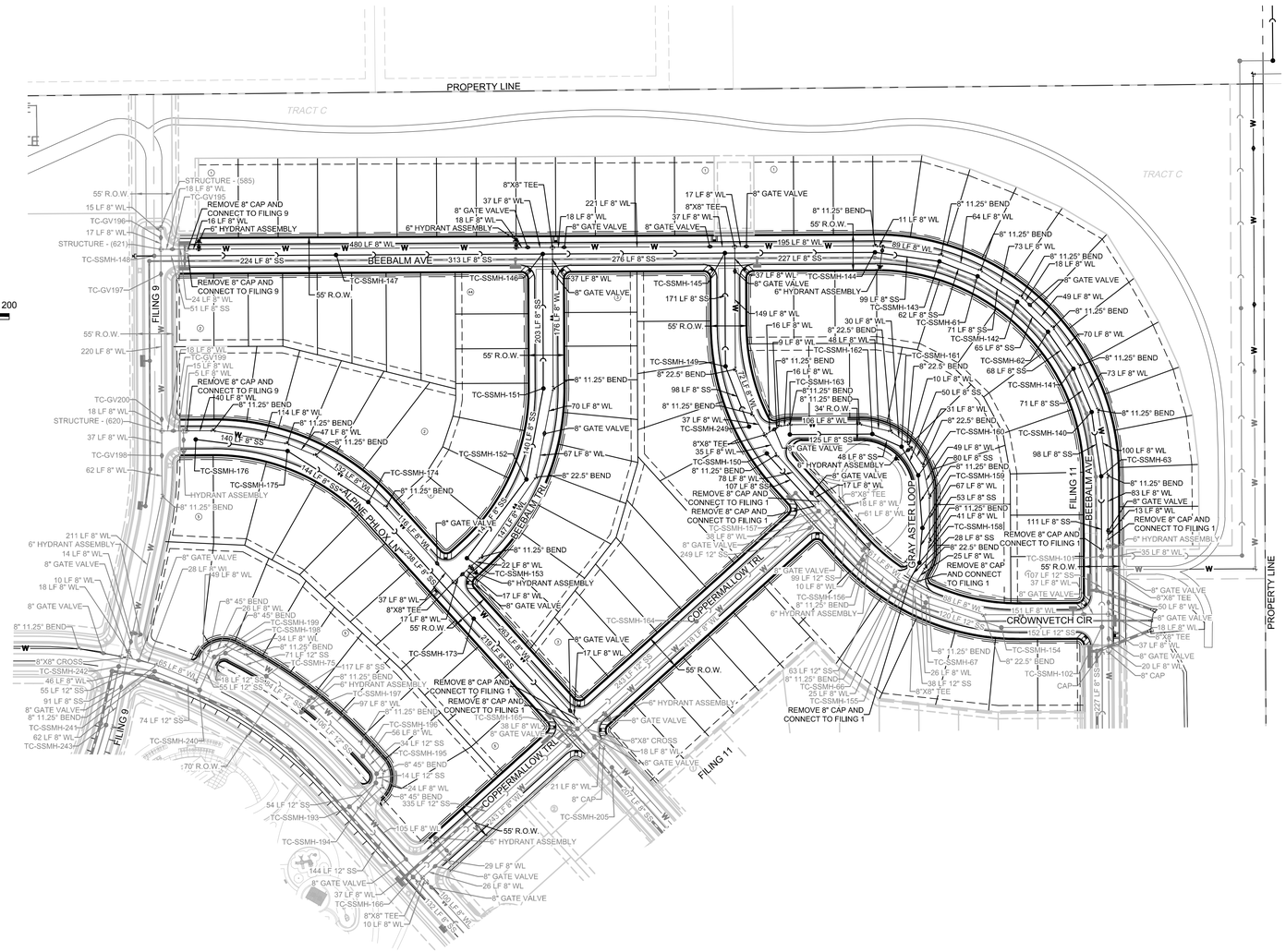

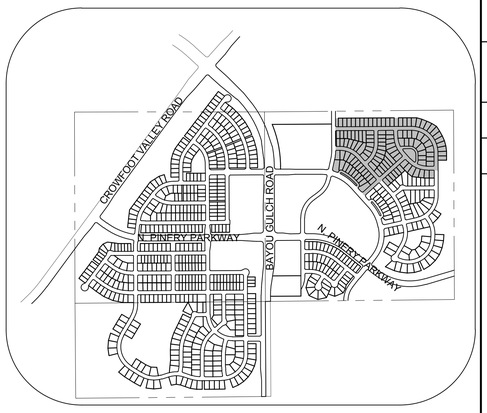

KEYMAP
N.T.S.

LEGEND

2	BLOCK NUMBER		PROPOSED RANGE POINT
A	LOT TYPE		CENTERLINE
6	LOT NUMBER		RIGHT-OF-WAY
	PROPOSED BUTTERFLY VALVE		PROPERTY LINE
	PROPOSED CAP WITH END OF LINE BLOWOFF		EDGE OF PAVEMENT
	PROPOSED REDUCER		PROPOSED DIRECTION OF FLOW
	PROPOSED VALVE	1.0%	PROPOSED SLOPE & DIRECTION
	PROPOSED FIRE HYDRANT	5615	EXISTING 5' CONTOUR
	PROPOSED WL FITTING WITH THRUST BLOCK	5616	EXISTING 1' CONTOUR
	PROPOSED FLARED END SECTION	5620	PROPOSED 5' CONTOUR
	PROPOSED LOW POINT BLOW-OFF	5607	PROPOSED 1' CONTOUR
	PROPOSED AIR VALVE		PROPOSED STORM DRAIN
	EXISTING BLOW OFF VALVE		PROPOSED SEWER LINE WITH MANHOLE
	EXISTING VALVE		PROPOSED SEWER LATERAL
	EXISTING FIRE HYDRANT	8"W	PROPOSED WATER LINE
	PROPOSED LIGHT POLE		PROPOSED WATER LATERAL W/ METER
	PROPOSED SIDEWALK	RW	EXISTING 60" RAW WATER LINE
	PROPOSED SIDEWALK RAMP		SECTION LINE
10.00	EXISTING ELEVATION		FILING BOUNDARY
10.00	PROPOSED DESIGN ELEVATION	FO	EXISTING FIBER OPTIC LINE
	PROPOSED STORM DRAIN INLET	HV	EXISTING OVERHEAD HIGH VOLTAGE LINE
4 5 6	PROPOSED STORM DRAIN MANHOLE	TEL	EXISTING TELEPHONE LINE

ABBREVIATIONS

AD	ANGLE DIFFERENCE	N.T.S.	NOT TO SCALE
BVC	BEGIN VERTICAL CURVE	PL	PROPERTY LINE
BVP	BEGIN VERTICAL PROFILE	PVC	POLYVINYL CHLORIDE
CRR	CURB RETURN RADIUS	PVI	PT. OF VERTICAL INTERSECTION
EL	ELEVATION	PVT	POINT OF VERTICAL TANGENT
EP	EDGE OF PAVEMENT	RCBC	REINFORCED CONCRETE BOX CULVERT
EVC	END VERTICAL CURVE	RCP	REINFORCED CONCRETE PIPE
EVP	END VERTICAL PROFILE	ROW	RIGHT OF WAY
FG	FINISHED GROUND	SD	STORM DRAIN
FL	FLOW LINE	SL	SECTION LINE
GV	GATE VALVE	SS	SANITARY SEWER
HA	HYDRANT ASSEMBLY	STA	STATION
HCR	HANDICAP CURB RAMP	T.O.P.	TOP OF PIPE
HP	HIGH POINT	UE	UTILITY EASEMENT
INV	INVERT	VC	VERTICAL CURVE
K	CURVATURE COEFFICIENT	WL	WATER LINE
LF	LINEAR FEET	WSE	WATER SURFACE ELEVATION
MH	MANHOLE		

FIRE DEPARTMENT APPROVAL
ALL FIRE HYDRANTS SHALL BE INSTALLED ACCORDING TO WATER UTILITY STANDARDS. THE NUMBER AND LOCATIONS OF THE FIRE HYDRANTS AS SHOWN ON THE OVERALL UTILITY PLAN ARE CORRECT AS SPECIFIED BY THE TOWN OF PARKER, COMMUNITY DEVELOPMENT DEPARTMENT.

(FIRE CODE OFFICIAL OR DESIGNATED REPRESENTATIVE) DATE

(NOTE- UNDERGROUND FIRE LINE (UFL) SUBMITTAL DOCUMENTS MUST MEET THE REQUIREMENTS OF NFPA24 WHEN SUBMITTING FOR REVIEW.)

CALL 811
TWO WORKING DAYS
BEFORE YOU DIG
1-800-922-1987
UNCC UTILITY NOTIFICATION CENTER OF COLORADO

BENCHMARK
DOUGLAS COUNTY CONTROL POINT KNOWN AS 1.060032, BEING A 3-1/4" ALUMINUM CAP, BEING LOCATED IN THE SOUTHWEST QUARTER OF SECTION 33, TOWNSHIP 6 SOUTH, RANGE 66 WEST OF THE SIXTH PRINCIPAL MERIDIAN, HAVING A PUBLISHED ELEVATION OF 1799.2870 METERS (5903.13 FEET) NAVD '88 DATUM.

BASIS OF BEARINGS:
THE EAST LINE OF THE NORTHEAST QUARTER OF SAID SECTION 9 BEING MONUMENTED AT THE NORTHEAST CORNER OF SAID SECTION 9 BY A 3-1/4" ALUMINUM CAP STAMPED LS 23053 AND AT THE EAST QUARTER CORNER OF SAID SECTION 9 BY A 2-1/2" ALUMINUM CAP STAMPED LS 6935 BEING CONSIDERED TO BEAR SOUTH 00°15'06" EAST, 2648.70 FEET.

PREPARED UNDER THE SUPERVISION OF

BRIAN P. WILSON
COLORADO P.E. 0050067

THE DISTRICT INSPECTOR MUST BE NOTIFIED AT LEAST 48 HOURS PRIOR TO START OF CONSTRUCTION. CALL PARKER WATER AND SANITATION DISTRICT AT 303-841-4627. THE DISTRICT WILL PROVIDE PERIODIC INSPECTIONS OF THE WORK. 24 HOUR NOTICE TO THE INSPECTOR IS REQUIRED FOR SCHEDULINE INSPECTIONS. ANY WORK ACCOMPLISHED WITHOUT THE APPROVAL OF THE INSPECTOR WILL BE SUBJECT TO REJECTION.

REVIEWED FOR CONFORMANCE TO PARKER WATER AND SANITATION DISTRICT STANDARDS.

BY: _____ _____
(DISTRICT REPRESENTATIVE) DATE

APPROVED FOR CONSTRUCTION:
PARKER WATER AND SANITATION DISTRICT

BY: _____ _____
(DISTRICT ENGINEER) DATE

No.	Revisions	Date	Init.	Aggr.	Date

CVL CONSULTANTS
10333 E. Dry Creek Rd.
Suite 240
Englewood, CO 80112
Tel: (720) 482-9526
Fax: (720) 482-9546

E5X MANAGEMENT
7353 South Alton Way
CENTENNIAL, CO 80112

TRAILS AT CROWFOOT
FILING 10 CONSTRUCTION DRAWINGS
AREA UTILITY PLAN

SCALE: AS SHOWN
FILE NO: 8130283701
DRAWN BY: JLR
CHECKED BY: JJJ
DATE: SEPTEMBER 2017
SHEET NUMBER 3

N:\PROJECTS\HESS RANCH\CAD\ENGINEERING\SHEET SETS\CD\SF10\PARKER WATER AND SANITATION\F10 AREA UTILITY PLAN.DWG, CODYA, 8/23/2017 2:48 PM

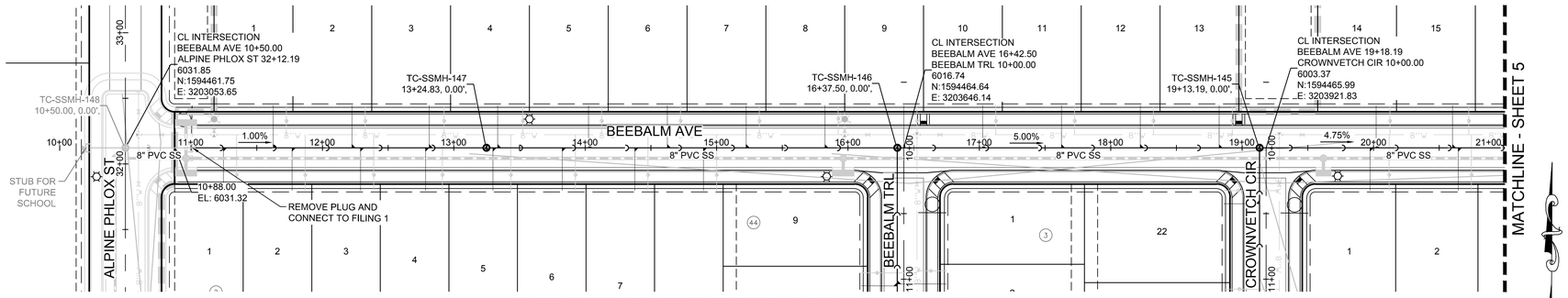

PLAN: BEEBALM AVENUE STA: 9+50.00 TO 21+00.00
HORIZONTAL SCALE: 1" = 50'

50 25 0 50 100
SCALE: 1" = 50'

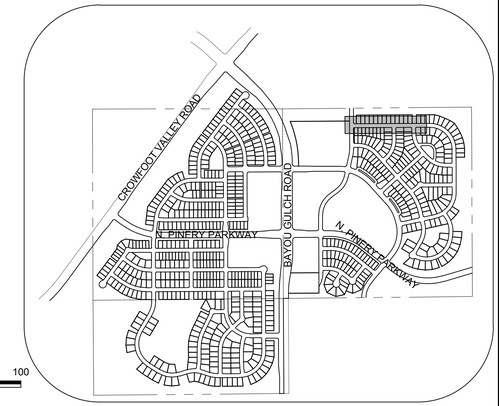

KEYMAP
N.T.S.

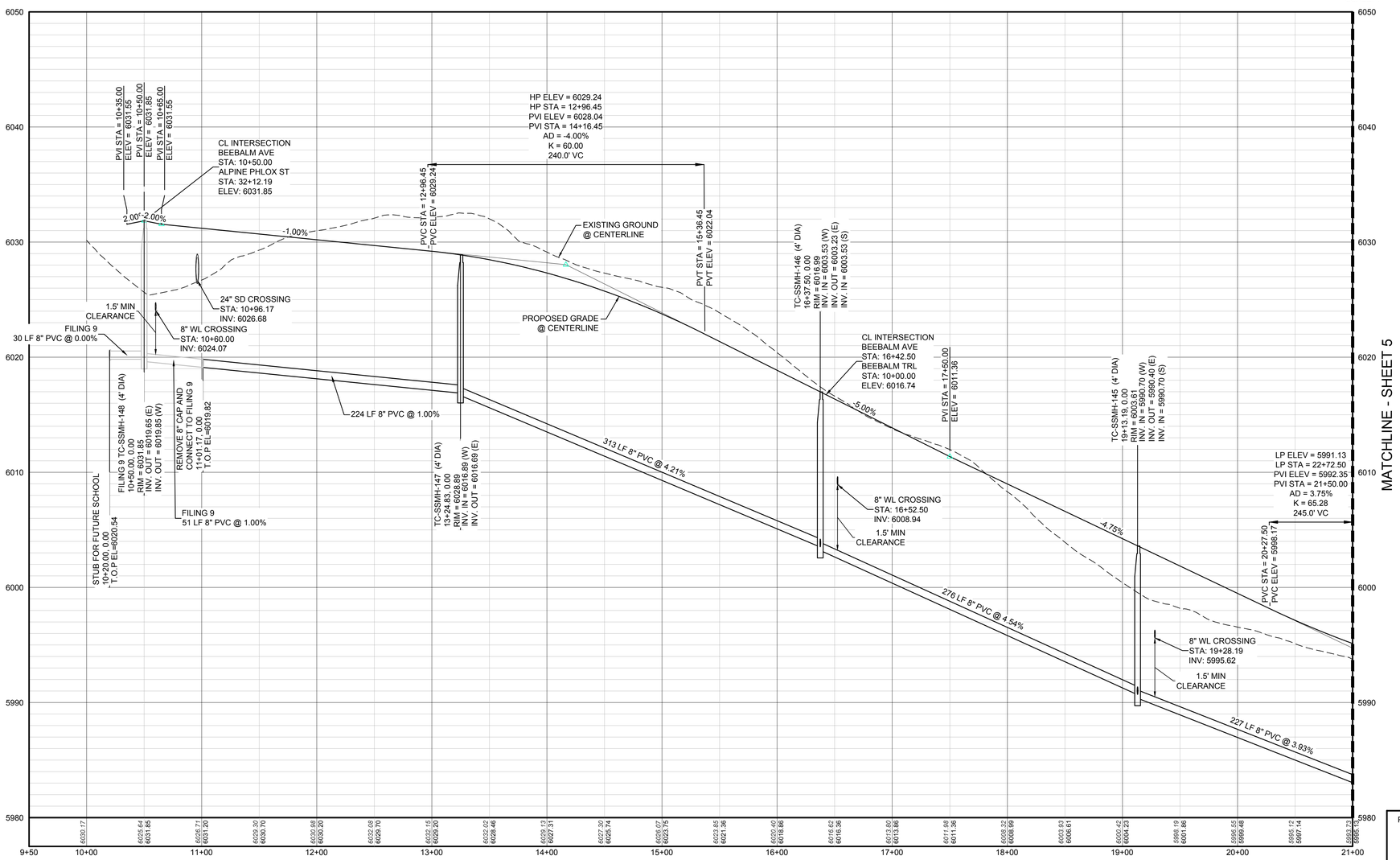

PROFILE: BEEBALM AVE STA: 9+50.00 TO 21+00.00
HORIZONTAL: 1" = 50'
VERTICAL: 1" = 5'

LEGEND

BLOCK NUMBER	PROPOSED RANGE POINT
LOT TYPE	CENTERLINE
LOT NUMBER	RIGHT-OF-WAY
PROPOSED BUTTERFLY VALVE	PROPERTY LINE
PROPOSED CAP WITH END OF LINE BLOWOFF	EDGE OF PAVEMENT
PROPOSED REDUCER	PROPOSED DIRECTION OF FLOW
PROPOSED VALVE	PROPOSED SLOPE & DIRECTION
PROPOSED FIRE HYDRANT	EXISTING 5' CONTOUR
PROPOSED WL FITTING WITH THRUST BLOCK	EXISTING 1' CONTOUR
PROPOSED FLARED END SECTION	PROPOSED 5' CONTOUR
PROPOSED LOW POINT BLOW-OFF	PROPOSED 1' CONTOUR
PROPOSED AIR VALVE	PROPOSED STORM DRAIN
EXISTING BLOW OFF VALVE	PROPOSED SEWER LINE WITH MANHOLE
EXISTING VALVE	PROPOSED SEWER LATERAL
EXISTING FIRE HYDRANT	PROPOSED WATER LINE
PROPOSED LIGHT POLE	PROPOSED WATER LATERAL W/ METER
PROPOSED SIDEWALK	EXISTING 60" RAW WATER LINE
PROPOSED SIDEWALK RAMP	SECTION LINE
EXISTING ELEVATION	FILING BOUNDARY
PROPOSED DESIGN ELEVATION	EXISTING FIBER OPTIC LINE
PROPOSED STORM DRAIN INLET	EXISTING OVERHEAD HIGH VOLTAGE LINE
PROPOSED STORM DRAIN MANHOLE	EXISTING TELEPHONE LINE

ABBREVIATIONS

AD	ANGLE DIFFERENCE	N.T.S.	NOT TO SCALE
BVC	BEGIN VERTICAL CURVE	PL	PROPERTY LINE
BVP	BEGIN VERTICAL PROFILE	PVC	POLYVINYL CHLORIDE
CRR	CURB RETURN RADIUS	PVI	PT. OF VERTICAL INTERSECTION
EL	ELEVATION	PVT	POINT OF VERTICAL TANGENT
EP	EDGE OF PAVEMENT	RCBC	REINFORCED CONCRETE BOX CULVERT
EVC	END VERTICAL CURVE		
EVP	END VERTICAL PROFILE	RCP	REINFORCED CONCRETE PIPE
FG	FINISHED GROUND	ROW	RIGHT OF WAY
FL	FLOW LINE	SD	STORM DRAIN
GV	GATE VALVE	SL	SECTION LINE
HA	HYDRANT ASSEMBLY	SS	SANITARY SEWER
HCR	HANDICAP CURB RAMP	STA	STATION
HP	HIGH POINT	T.O.P.	TOP OF PIPE
INV	INVERT	UE	UTILITY EASEMENT
K	CURVATURE COEFFICIENT	VC	VERTICAL CURVE
LF	LINEAR FEET	WL	WATER LINE
MH	MANHOLE	WSE	WATER SURFACE ELEVATION

CALL 811
TWO WORKING DAYS
BEFORE YOU DIG
1-800-922-1987
UNCC UTILITY NOTIFICATION CENTER OF COLORADO

BENCHMARK
DOUGLAS COUNTY CONTROL POINT KNOWN AS 1.060032, BEING A 3-1/4" ALUMINUM CAP, BEING LOCATED IN THE SOUTHWEST QUARTER OF SECTION 33, TOWNSHIP 6 SOUTH, RANGE 66 WEST OF THE SIXTH PRINCIPAL MERIDIAN, HAVING A PUBLISHED ELEVATION OF 1799.2870 METERS (5903.13 FEET) NAVD '88 DATUM.

BASIS OF BEARINGS:
THE EAST LINE OF THE NORTHEAST QUARTER OF SAID SECTION 9 BEING MONUMENTED AT THE NORTHEAST CORNER OF SAID SECTION 9 BY A 3-1/4" ALUMINUM CAP STAMPED LS 23053 AND AT THE EAST QUARTER CORNER OF SAID SECTION 9 BY A 2-1/2" ALUMINUM CAP STAMPED LS 6935 BEING CONSIDERED TO BEAR SOUTH 00°15'06" EAST, 2648.70 FEET.

PREPARED UNDER THE SUPERVISION OF

BRIAN P. WILSON
COLORADO P.E. 0050067

No.	Revisions	Date	Init.	Appr.	Date

10333 E. Dry Creek Rd.
Suite 240
Englewood, CO 80112
Tel: (720) 482-9526
Fax: (720) 482-9546
CVL CONSULTANTS

E5X MANAGEMENT
7353 South Alton Way
CENTENNIAL, CO 80112

TRAILS AT CROWFOOT
FILING 10 CONSTRUCTION DRAWINGS
SANITARY SEWER PLAN AND PROFILE
BEEBALM AVENUE

SCALE: AS SHOWN
FILE NO: 8130283701
DRAWN BY: JLR
CHECKED BY: JJJ
DATE: SEPTEMBER 2017
SHEET NUMBER 4

N:\PROJECTS\HESS RANCH\CAD\ENGINEERING\SHEET SETS\CD'S\F10\PARKER WATER AND SANITATION\SANITARY PLAN AND PROFILE\F10 BEEBALM AVENUE SANITARY.DWG, CODYA, 8/23/2017 2:55 PM

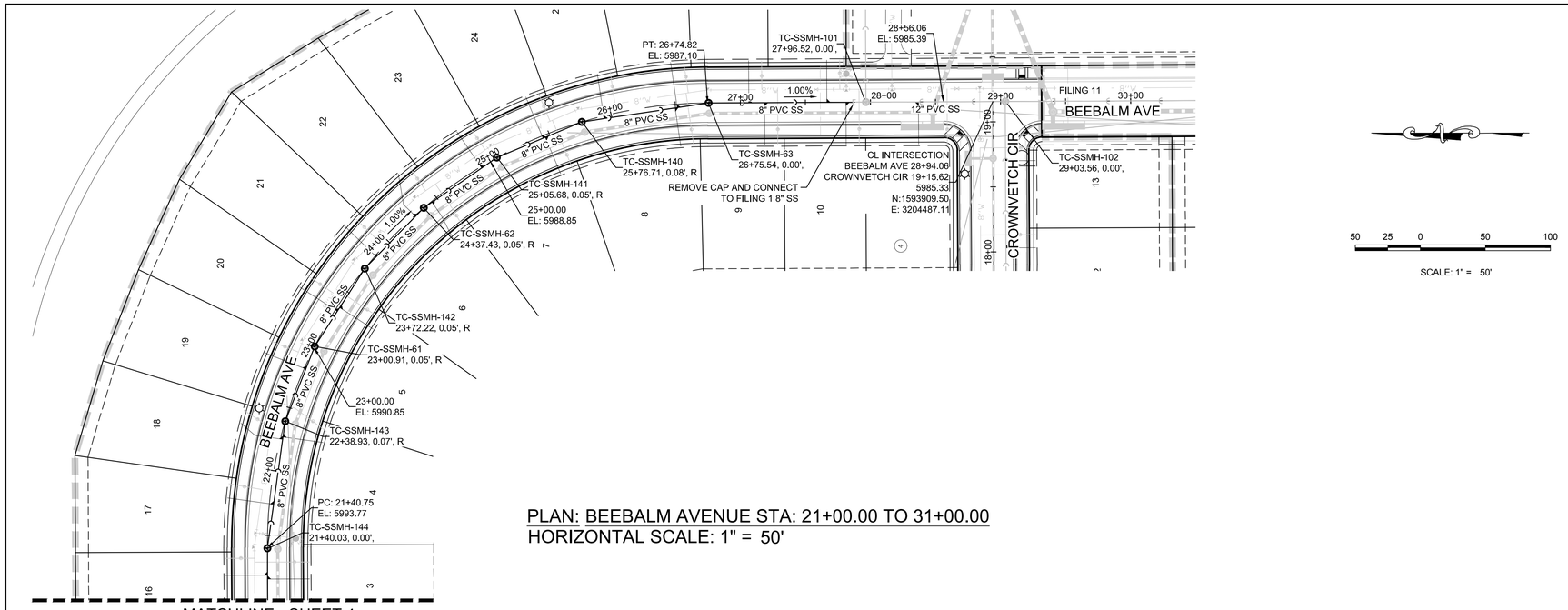

PLAN: BEEBALM AVENUE STA: 21+00.00 TO 31+00.00
HORIZONTAL SCALE: 1" = 50'

50 25 0 50 100

SCALE: 1" = 50'

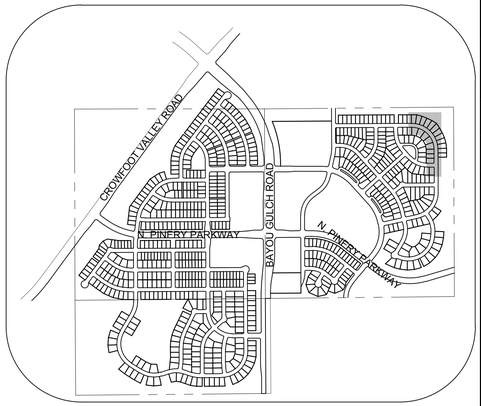

KEYMAP
N.T.S.

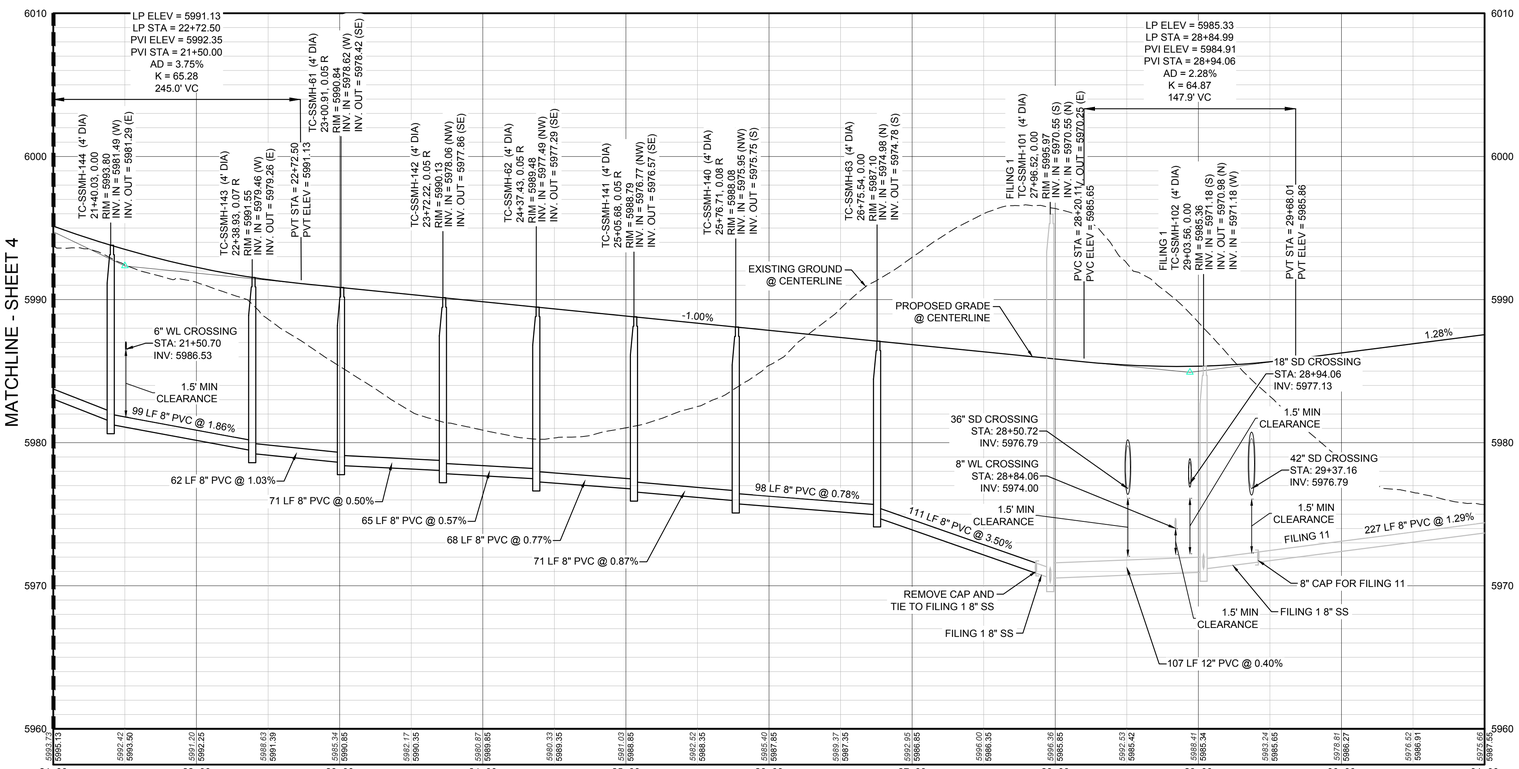

PROFILE: BEEBALM AVE STA: 21+00.00 TO 31+00.00
HORIZONTAL: 1" = 50'
VERTICAL: 1" = 5'

LEGEND

2	BLOCK NUMBER		PROPOSED RANGE POINT
A	LOT TYPE		CENTERLINE
6	LOT NUMBER		RIGHT-OF-WAY
	PROPOSED BUTTERFLY VALVE		PROPERTY LINE
	PROPOSED CAP WITH END OF LINE BLOWOFF		EDGE OF PAVEMENT
	PROPOSED REDUCER		PROPOSED DIRECTION OF FLOW
	PROPOSED VALVE	1.0%	PROPOSED SLOPE & DIRECTION
	PROPOSED FIRE HYDRANT	5615	EXISTING 5' CONTOUR
	PROPOSED WL FITTING WITH THRUST BLOCK	5616	EXISTING 1' CONTOUR
	PROPOSED FLARED END SECTION	5620	PROPOSED 5' CONTOUR
BO	PROPOSED LOW POINT BLOW-OFF	5607	PROPOSED 1' CONTOUR
AV	PROPOSED AIR VALVE		PROPOSED STORM DRAIN
BO	EXISTING BLOW OFF VALVE		PROPOSED SEWER LINE WITH MANHOLE
	EXISTING VALVE		PROPOSED SEWER LATERAL
	EXISTING FIRE HYDRANT	8"W	PROPOSED WATER LINE
	PROPOSED LIGHT POLE		PROPOSED WATER LATERAL W/ METER
	PROPOSED SIDEWALK	RW	EXISTING 60" RAW WATER LINE
	PROPOSED SIDEWALK RAMP		SECTION LINE
10.00	EXISTING ELEVATION		FILING BOUNDARY
10.00	PROPOSED DESIGN ELEVATION	FO	EXISTING FIBER OPTIC LINE
	PROPOSED STORM DRAIN INLET	HV	EXISTING OVERHEAD HIGH VOLTAGE LINE
4 5 6	PROPOSED STORM DRAIN MANHOLE	TEL	EXISTING TELEPHONE LINE

ABBREVIATIONS

AD	ANGLE DIFFERENCE	N.T.S.	NOT TO SCALE
BVC	BEGIN VERTICAL CURVE	PL	PROPERTY LINE
BVP	BEGIN VERTICAL PROFILE	PVC	POLYVINYL CHLORIDE
CRR	CURB RETURN RADIUS	PVI	PT. OF VERTICAL INTERSECTION
EL	ELEVATION	PVT	POINT OF VERTICAL TANGENT
EP	EDGE OF PAVEMENT	RCBC	REINFORCED CONCRETE BOX CULVERT
EVC	END VERTICAL CURVE		
EVP	END VERTICAL PROFILE	RCP	REINFORCED CONCRETE PIPE
FG	FINISHED GROUND	ROW	RIGHT OF WAY
FL	FLOW LINE	SD	STORM DRAIN
GV	GATE VALVE	SL	SECTION LINE
HA	HYDRANT ASSEMBLY	SS	SANITARY SEWER
HCR	HANDICAP CURB RAMP	STA	STATION
HP	HIGH POINT	T.O.P.	TOP OF PIPE
INV	INVERT	UE	UTILITY EASEMENT
K	CURVATURE COEFFICIENT	VC	VERTICAL CURVE
LF	LINEAR FEET	WL	WATER LINE
MH	MANHOLE	WSE	WATER SURFACE ELEVATION

CALL 811
TWO WORKING DAYS
BEFORE YOU DIG
1-800-922-1987
UNCC UTILITY NOTIFICATION CENTER OF COLORADO

BENCHMARK
DOUGLAS COUNTY CONTROL POINT KNOWN AS 1.060032, BEING A 3-1/4" ALUMINUM CAP, BEING LOCATED IN THE SOUTHWEST QUARTER OF SECTION 33, TOWNSHIP 6 SOUTH, RANGE 66 WEST OF THE SIXTH PRINCIPAL MERIDIAN, HAVING A PUBLISHED ELEVATION OF 1799.2870 METERS (5903.13 FEET) NAVD '88 DATUM.

BASIS OF BEARINGS:
THE EAST LINE OF THE NORTHEAST QUARTER OF SAID SECTION 9 BEING MONUMENTED AT THE NORTHEAST CORNER OF SAID SECTION 9 BY A 3-1/4" ALUMINUM CAP STAMPED LS 23053 AND AT THE EAST QUARTER CORNER OF SAID SECTION 9 BY A 2-1/2" ALUMINUM CAP STAMPED LS 6935 BEING CONSIDERED TO BEAR SOUTH 00°15'06" EAST, 2648.70 FEET.

PREPARED UNDER THE SUPERVISION OF

BRIAN P. WILSON
COLORADO P.E. 0050067

No.	Revisions	Date	Init.	Appr.	Date

CVL CONSULTANTS
10333 E. Dry Creek Rd.
Suite 240
Englewood, CO 80112
Tel: (720) 482-9526
Fax: (720) 482-9546

E5X MANAGEMENT
7353 South Alton Way
CENTENNIAL, CO 80112

TRAILS AT CROWFOOT
FILING 10 CONSTRUCTION DRAWINGS
SANITARY SEWER PLAN AND PROFILE
BEEBALM AVENUE

SCALE: AS SHOWN
FILE NO: 8130283701
DRAWN BY: JLR
CHECKED BY: JJJ
DATE: SEPTEMBER 2017
SHEET NUMBER 5

N:\PROJECTS\HESS RANCH\CAD\ENGINEERING\SHEET SETS\CD\SF10\PARKER WATER AND SANITATION\SANITARY PLAN AND PROFILE\F10 BEEBALM AVENUE SANITARY DWG, CODYA, 8/23/2017 2:55 PM

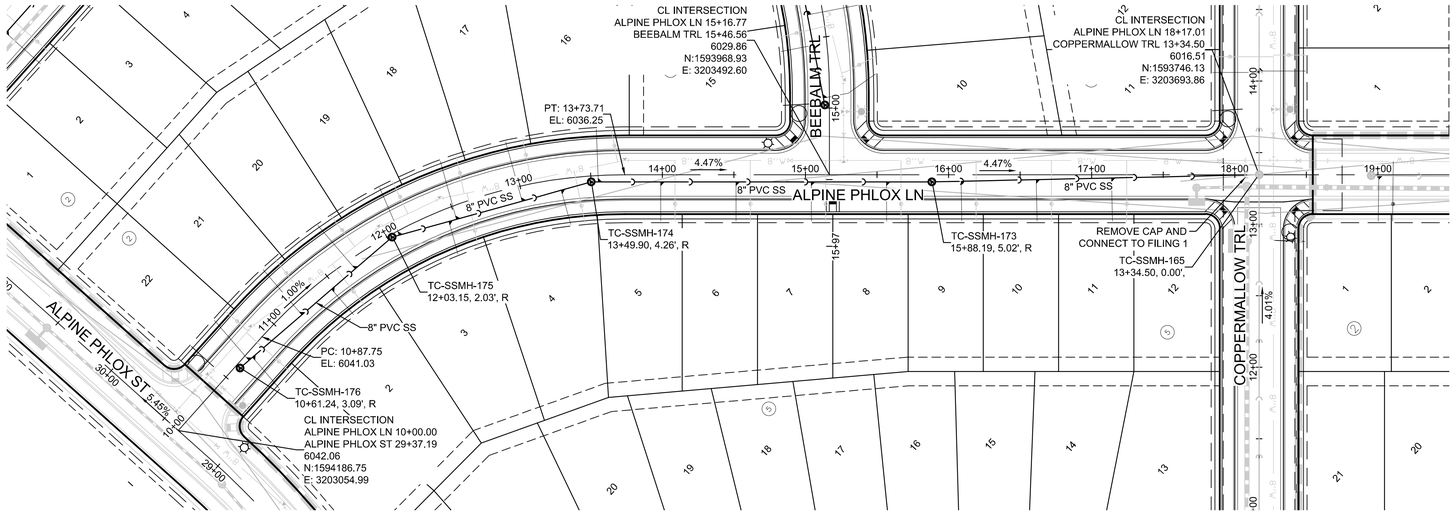

PLAN: ALPINE PHLOX LANE STA: 9+50.00 TO 19+50.00
HORIZONTAL SCALE: 1" = 50'

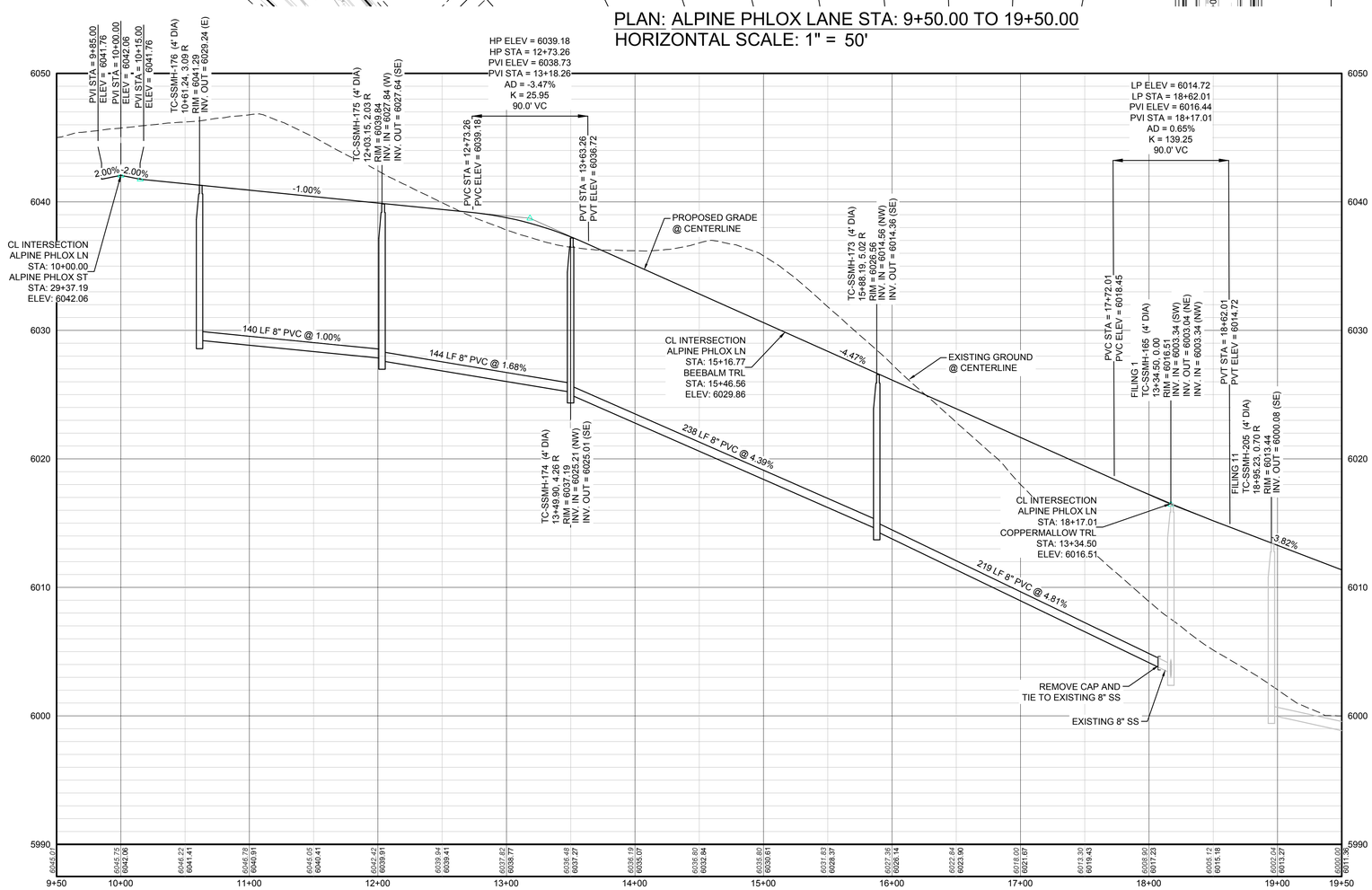

PROFILE: ALPINE PHLOX LN STA: 9+50.00 TO 19+50.00
HORIZONTAL: 1" = 50'
VERTICAL: 1" = 5'

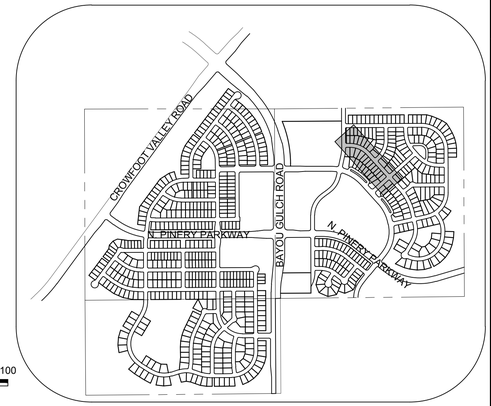

KEYMAP
N.T.S.

LEGEND

2	BLOCK NUMBER		PROPOSED RANGE POINT
A	LOT TYPE		CENTERLINE
6	LOT NUMBER		RIGHT-OF-WAY
	PROPOSED BUTTERFLY VALVE		PROPERTY LINE
	PROPOSED CAP WITH END OF LINE BLOWOFF		EDGE OF PAVEMENT
	PROPOSED REDUCER		PROPOSED DIRECTION OF FLOW
	PROPOSED VALVE	1.0%	PROPOSED SLOPE & DIRECTION
	PROPOSED FIRE HYDRANT	5615	EXISTING 5' CONTOUR
	PROPOSED WL FITTING WITH THRUST BLOCK	5616	EXISTING 1' CONTOUR
	PROPOSED FLARED END SECTION	5620	PROPOSED 5' CONTOUR
BO	PROPOSED LOW POINT BLOW-OFF	5607	PROPOSED 1' CONTOUR
AV	PROPOSED AIR VALVE		PROPOSED STORM DRAIN
BO	EXISTING BLOW OFF VALVE		PROPOSED SEWER LINE WITH MANHOLE
	EXISTING VALVE		PROPOSED SEWER LATERAL
	EXISTING FIRE HYDRANT	8"W	PROPOSED WATER LINE
	PROPOSED LIGHT POLE		PROPOSED WATER LATERAL W/ METER
	PROPOSED SIDEWALK	RW	EXISTING 60" RAW WATER LINE
	PROPOSED SIDEWALK RAMP		SECTION LINE
10.00	EXISTING ELEVATION		FILING BOUNDARY
10.00	PROPOSED DESIGN ELEVATION	FO	EXISTING FIBER OPTIC LINE
	PROPOSED STORM DRAIN INLET	HV	EXISTING OVERHEAD HIGH VOLTAGE LINE
4 5 6	PROPOSED STORM DRAIN MANHOLE	TEL	EXISTING TELEPHONE LINE

ABBREVIATIONS

AD	ANGLE DIFFERENCE	N.T.S.	NOT TO SCALE
BVC	BEGIN VERTICAL CURVE	PL	PROPERTY LINE
BVP	BEGIN VERTICAL PROFILE	PVC	POLYVINYL CHLORIDE
CRR	CURB RETURN RADIUS	PVI	PT. OF VERTICAL INTERSECTION
EL	ELEVATION	PVT	POINT OF VERTICAL TANGENT
EP	EDGE OF PAVEMENT	RCBC	REINFORCED CONCRETE BOX CULVERT
EVC	END VERTICAL CURVE	RCP	REINFORCED CONCRETE PIPE
EVP	END VERTICAL PROFILE	ROW	RIGHT OF WAY
FG	FINISHED GROUND	SD	STORM DRAIN
FL	FLOW LINE	SL	SECTION LINE
GV	GATE VALVE	SS	SANITARY SEWER
HA	HYDRANT ASSEMBLY	STA	STATION
HCR	HANDICAP CURB RAMP	T.O.P.	TOP OF PIPE
HP	HIGH POINT	UE	UTILITY EASEMENT
INV	INVERT	VC	VERTICAL CURVE
K	CURVATURE COEFFICIENT	WL	WATER LINE
LF	LINEAR FEET	WSE	WATER SURFACE ELEVATION
MH	MANHOLE		

CALL 811
TWO WORKING DAYS
BEFORE YOU DIG
1-800-922-1987
UNCC UTILITY NOTIFICATION CENTER OF COLORADO

BENCHMARK
DOUGLAS COUNTY CONTROL POINT KNOWN AS 1.060032, BEING A 3-1/4" ALUMINUM CAP, BEING LOCATED IN THE SOUTHWEST QUARTER OF SECTION 33, TOWNSHIP 6 SOUTH, RANGE 66 WEST OF THE SIXTH PRINCIPAL MERIDIAN, HAVING A PUBLISHED ELEVATION OF 1799.2870 METERS (5903.13 FEET) NAVD '88 DATUM.

BASIS OF BEARINGS:
THE EAST LINE OF THE NORTHEAST QUARTER OF SAID SECTION 9 BEING MONUMENTED AT THE NORTHEAST CORNER OF SAID SECTION 9 BY A 3-1/4" ALUMINUM CAP STAMPED LS 23053 AND AT THE EAST QUARTER CORNER OF SAID SECTION 9 BY A 2-1/2" ALUMINUM CAP STAMPED LS 6935 BEING CONSIDERED TO BEAR SOUTH 00°15'06" EAST, 2648.70 FEET.

PREPARED UNDER THE SUPERVISION OF

BRIAN P. WILSON
COLORADO P.E. 0050067

No.	Revisions	Date	Init.	Appr.	Date

10333 E. Dry Creek Rd.
Suite 240
Englewood, CO 80112
Tel: (720) 482-9526
Fax: (720) 482-9546
CVL CONSULTANTS

E5X MANAGEMENT
7353 South Alton Way
CENTENNIAL, CO 80112

TRAILS AT CROWFOOT
FILING 10 CONSTRUCTION DRAWINGS
SANITARY SEWER PLAN AND PROFILE
ALPINE PHLOX LANE

SCALE: AS SHOWN
FILE NO: 8130283701
DRAWN BY: JLR
CHECKED BY: JJJ
DATE: SEPTEMBER 2017
SHEET NUMBER 6

N:\PROJECTS\HESS RANCH\CAD\ENGINEERING\SHEET SETS\CD'S\F10\PARKER WATER AND SANITATION\SANITARY PLAN AND PROFILE\ALPINE PHLOX LANE.DWG, CODYA, 8/23/2017 2:58 PM

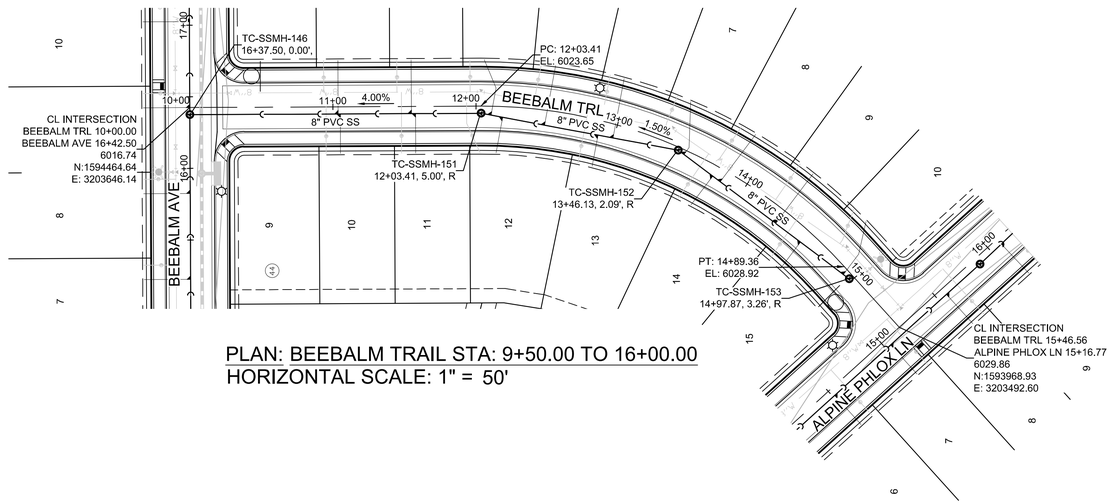

PLAN: BEEBALM TRAIL STA: 9+50.00 TO 16+00.00
HORIZONTAL SCALE: 1" = 50'

50 25 0 50 100

SCALE: 1" = 50'

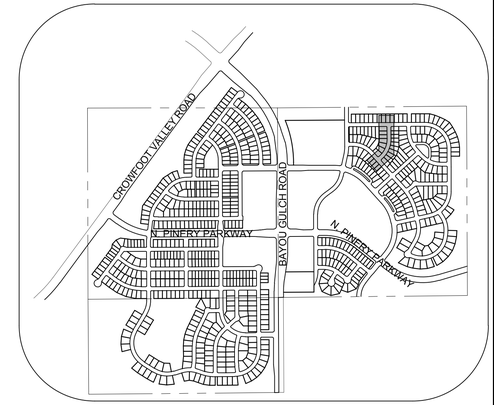

KEYMAP
N.T.S.

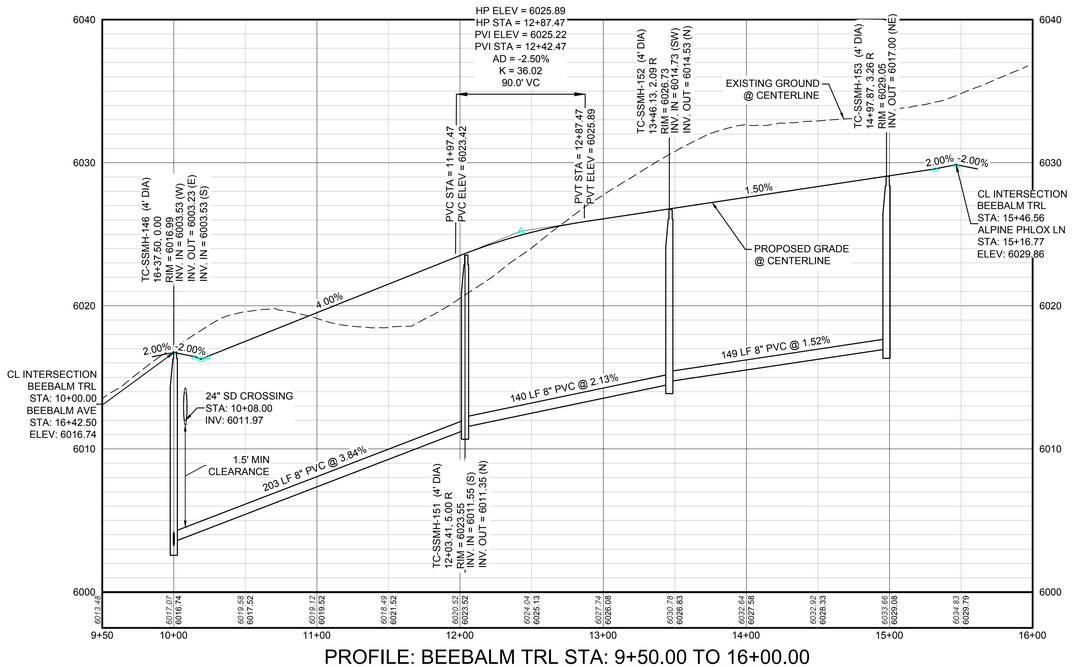

PROFILE: BEEBALM TRL STA: 9+50.00 TO 16+00.00
HORIZONTAL: 1" = 50'
VERTICAL: 1" = 5'

LEGEND

2	BLOCK NUMBER		PROPOSED RANGE POINT
A	LOT TYPE		CENTERLINE
6	LOT NUMBER		RIGHT-OF-WAY
	PROPOSED BUTTERFLY VALVE		PROPERTY LINE
	PROPOSED CAP WITH END OF LINE BLOWOFF		EDGE OF PAVEMENT
	PROPOSED REDUCER		PROPOSED DIRECTION OF FLOW
	PROPOSED VALVE	1.0%	PROPOSED SLOPE & DIRECTION
	PROPOSED FIRE HYDRANT	5615	EXISTING 5' CONTOUR
	PROPOSED WL FITTING WITH THRUST BLOCK	5616	EXISTING 1' CONTOUR
	PROPOSED FLARED END SECTION	5620	PROPOSED 5' CONTOUR
BO	PROPOSED LOW POINT BLOW-OFF	5607	PROPOSED 1' CONTOUR
AV	PROPOSED AIR VALVE		PROPOSED STORM DRAIN
BO	EXISTING BLOW OFF VALVE		PROPOSED SEWER LINE WITH MANHOLE
	EXISTING VALVE		PROPOSED SEWER LATERAL
	EXISTING FIRE HYDRANT	8"W	PROPOSED WATER LINE
	PROPOSED LIGHT POLE		PROPOSED WATER LATERAL W/ METER
	PROPOSED SIDEWALK	RW	EXISTING 60" RAW WATER LINE
	PROPOSED SIDEWALK RAMP		SECTION LINE
10.00	EXISTING ELEVATION		FILING BOUNDARY
10.00	PROPOSED DESIGN ELEVATION	FO	EXISTING FIBER OPTIC LINE
	PROPOSED STORM DRAIN INLET	HV	EXISTING OVERHEAD HIGH VOLTAGE LINE
4 5 6	PROPOSED STORM DRAIN MANHOLE	TEL	EXISTING TELEPHONE LINE

ABBREVIATIONS

AD	ANGLE DIFFERENCE	N.T.S.	NOT TO SCALE
BVC	BEGIN VERTICAL CURVE	PL	PROPERTY LINE
BVP	BEGIN VERTICAL PROFILE	PVC	POLYVINYL CHLORIDE
CRR	CURB RETURN RADIUS	PVI	PT. OF VERTICAL INTERSECTION
EL	ELEVATION	PVT	POINT OF VERTICAL TANGENT
EP	EDGE OF PAVEMENT	RCBC	REINFORCED CONCRETE BOX CULVERT
EVC	END VERTICAL CURVE	RCP	REINFORCED CONCRETE PIPE
EVP	END VERTICAL PROFILE	ROW	RIGHT OF WAY
FG	FINISHED GROUND	SD	STORM DRAIN
FL	FLOW LINE	SL	SECTION LINE
GV	GATE VALVE	SS	SANITARY SEWER
HA	HYDRANT ASSEMBLY	STA	STATION
HCR	HANDICAP CURB RAMP	T.O.P.	TOP OF PIPE
HP	HIGH POINT	UE	UTILITY EASEMENT
INV	INVERT	VC	VERTICAL CURVE
K	CURVATURE COEFFICIENT	WL	WATER LINE
LF	LINEAR FEET	WSE	WATER SURFACE ELEVATION
MH	MANHOLE		

No.	Revisions	Date	Init.	Appr.	Date

CVL CONSULTANTS
10333 E. Dry Creek Rd.
Suite 240
Englewood, CO 80112
Tel: (720) 482-9526
Fax: (720) 482-9546

E5X MANAGEMENT
7353 South Alton Way
CENTENNIAL, CO 80112

TRAILS AT CROWFOOT
FILING 10 CONSTRUCTION DRAWINGS
SANITARY SEWER PLAN AND PROFILE
BEEBALM TRAIL

SCALE:	AS SHOWN	FILE NO:	8130283701
DRAWN BY:	JLR		
CHECKED BY:	JJJ		
DATE:	SEPTEMBER 2017		
SHEET NUMBER	7		

PREPARED UNDER THE SUPERVISION OF

BRIAN P. WILSON
COLORADO P.E. 0050067

BENCHMARK
DOUGLAS COUNTY CONTROL POINT KNOWN AS 1.060032, BEING A 3-1/4" ALUMINUM CAP, BEING LOCATED IN THE SOUTHWEST QUARTER OF SECTION 33, TOWNSHIP 6 SOUTH, RANGE 66 WEST OF THE SIXTH PRINCIPAL MERIDIAN, HAVING A PUBLISHED ELEVATION OF 1799.2870 METERS (5903.13 FEET) NAVD '88 DATUM.

BASIS OF BEARINGS:
THE EAST LINE OF THE NORTHEAST QUARTER OF SAID SECTION 9 BEING MONUMENTED AT THE NORTHEAST CORNER OF SAID SECTION 9 BY A 3-1/4" ALUMINUM CAP STAMPED LS 23053 AND AT THE EAST QUARTER CORNER OF SAID SECTION 9 BY A 2-1/2" ALUMINUM CAP STAMPED LS 6935 BEING CONSIDERED TO BEAR SOUTH 00°15'06" EAST, 2648.70 FEET.

CALL 811
TWO WORKING DAYS
BEFORE YOU DIG
1-800-922-1987
UNCC UTILITY NOTIFICATION CENTER OF COLORADO

N:\PROJECTS\HESS RANCH\CAD\ENGINEERING\SHEET SETS\CD'S\F10\PARKER WATER AND SANITATION\SANITARY PLAN AND PROFILE\BEEBALM TRAIL.DWG, CODYA, 8/23/2017 3:02 PM

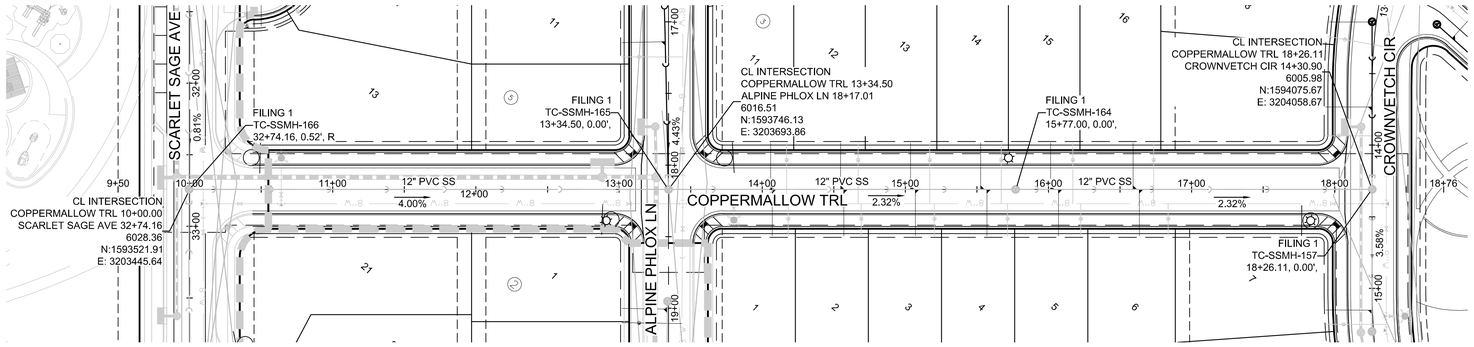

PLAN: COPPERMALLOW TRAIL STA: 9+50.00 TO 18+50.00
HORIZONTAL SCALE: 1" = 50'

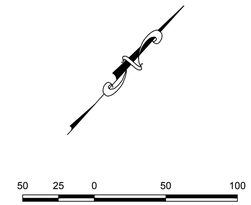

NOTE:
1. SANITARY MAIN INSTALLED WITH FILING 1, SANITARY SERVICES INSTALLED WITH FILING 10

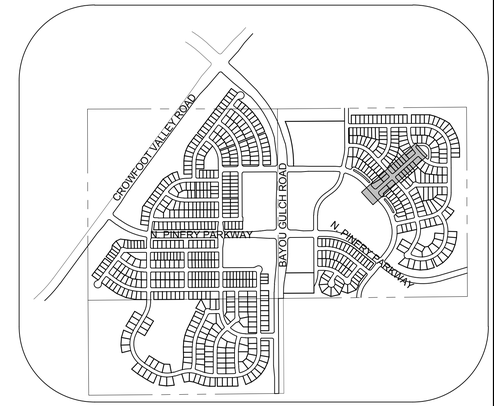

KEYMAP
N.T.S.

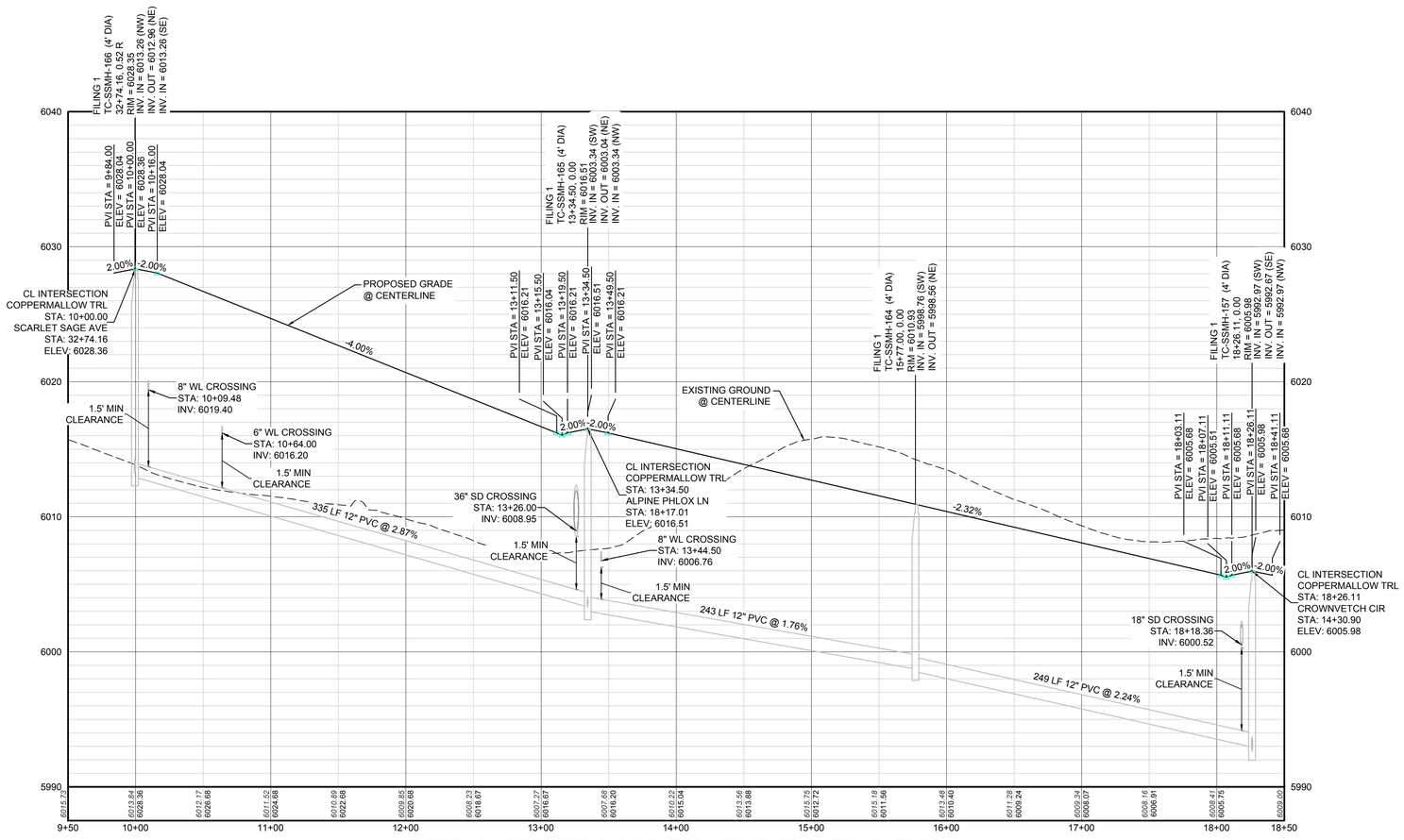

PROFILE: COPPERMALLOW TRL STA: 9+50.00 TO 18+50.00
HORIZONTAL: 1" = 50'
VERTICAL: 1" = 5'

LEGEND

2	BLOCK NUMBER		PROPOSED RANGE POINT
A	LOT TYPE		CENTERLINE
6	LOT NUMBER		RIGHT-OF-WAY
	PROPOSED BUTTERFLY VALVE		PROPERTY LINE
	PROPOSED CAP WITH END OF LINE BLOWOFF		EDGE OF PAVEMENT
	PROPOSED REDUCER		PROPOSED DIRECTION OF FLOW
	PROPOSED VALVE	1.0%	PROPOSED SLOPE & DIRECTION
	PROPOSED FIRE HYDRANT	5615	EXISTING 5' CONTOUR
	PROPOSED WL FITTING WITH THRUST BLOCK	5616	EXISTING 1' CONTOUR
	PROPOSED FLARED END SECTION	5620	PROPOSED 5' CONTOUR
	PROPOSED LOW POINT BLOW-OFF	5607	PROPOSED 1' CONTOUR
	PROPOSED AIR VALVE		PROPOSED STORM DRAIN
	EXISTING BLOW OFF VALVE		PROPOSED SEWER LINE WITH MANHOLE
	EXISTING VALVE		PROPOSED SEWER LATERAL
	EXISTING FIRE HYDRANT	8"W	PROPOSED WATER LINE
	PROPOSED LIGHT POLE		PROPOSED WATER LATERAL W/ METER
	PROPOSED SIDEWALK	RW	EXISTING 60" RAW WATER LINE
	PROPOSED SIDEWALK RAMP		SECTION LINE
10.00	EXISTING ELEVATION		FILING BOUNDARY
10.00	PROPOSED DESIGN ELEVATION	FO	EXISTING FIBER OPTIC LINE
	PROPOSED STORM DRAIN INLET	HV	EXISTING OVERHEAD HIGH VOLTAGE LINE
4 5 6	PROPOSED STORM DRAIN MANHOLE	TEL	EXISTING TELEPHONE LINE

ABBREVIATIONS

AD	ANGLE DIFFERENCE	N.T.S.	NOT TO SCALE
BVC	BEGIN VERTICAL CURVE	PL	PROPERTY LINE
BVP	BEGIN VERTICAL PROFILE	PVC	POLYVINYL CHLORIDE
CRR	CURB RETURN RADIUS	PVI	PT. OF VERTICAL INTERSECTION
EL	ELEVATION	PVT	POINT OF VERTICAL TANGENT
EP	EDGE OF PAVEMENT	RCBC	REINFORCED CONCRETE BOX CULVERT
EVC	END VERTICAL CURVE	RCP	REINFORCED CONCRETE PIPE
EVP	END VERTICAL PROFILE	ROW	RIGHT OF WAY
FG	FINISHED GROUND	SD	STORM DRAIN
FL	FLOW LINE	SL	SECTION LINE
GV	GATE VALVE	SS	SANITARY SEWER
HA	HYDRANT ASSEMBLY	STA	STATION
HCR	HANDICAP CURB RAMP	T.O.P.	TOP OF PIPE
HP	HIGH POINT	UE	UTILITY EASEMENT
INV	INVERT	VC	VERTICAL CURVE
K	CURVATURE COEFFICIENT	WL	WATER LINE
LF	LINEAR FEET	WSE	WATER SURFACE ELEVATION
MH	MANHOLE		

CALL 811
TWO WORKING DAYS
BEFORE YOU DIG
1-800-922-1987
UNCC UTILITY NOTIFICATION CENTER OF COLORADO

BENCHMARK
DOUGLAS COUNTY CONTROL POINT KNOWN AS 1.060032, BEING A 3-1/4" ALUMINUM CAP, BEING LOCATED IN THE SOUTHWEST QUARTER OF SECTION 33, TOWNSHIP 6 SOUTH, RANGE 66 WEST OF THE SIXTH PRINCIPAL MERIDIAN, HAVING A PUBLISHED ELEVATION OF 1799.2870 METERS (5903.13 FEET) NAVD '88 DATUM.

BASIS OF BEARINGS:
THE EAST LINE OF THE NORTHEAST QUARTER OF SAID SECTION 9 BEING MONUMENTED AT THE NORTHEAST CORNER OF SAID SECTION 9 BY A 3-1/4" ALUMINUM CAP STAMPED LS 23053 AND AT THE EAST QUARTER CORNER OF SAID SECTION 9 BY A 2-1/2" ALUMINUM CAP STAMPED LS 6935 BEING CONSIDERED TO BEAR SOUTH 00°15'06" EAST, 2648.70 FEET.

PREPARED UNDER THE SUPERVISION OF

BRIAN P. WILSON
COLORADO P.E. 0050067

No.	Revisions	Date	Init.	Appr.	Date

10333 E. Dry Creek Rd.
Suite 240
Englewood, CO 80112
Tel: (720) 482-9526
Fax: (720) 482-9546
CVL CONSULTANTS

E5X MANAGEMENT
7353 South Alton Way
CENTENNIAL, CO 80112

TRAILS AT CROWFOOT
FILING 10 CONSTRUCTION DRAWINGS
SANITARY SEWER PLAN AND PROFILE
COPPERMALLOW TRAIL

SCALE: AS SHOWN
FILE NO: 8130283701
DRAWN BY: JLR
CHECKED BY: JJJ
DATE: SEPTEMBER 2017
SHEET NUMBER 8

N:\PROJECTS\HESS RANCH\CAD\ENGINEERING\SHEET SETS\CD'S\F10\PARKER WATER AND SANITATION\SANITARY PLAN AND PROFILE\COPPERMALLOW TRAIL.DWG, CODYA, 8/23/2017 3:09 PM

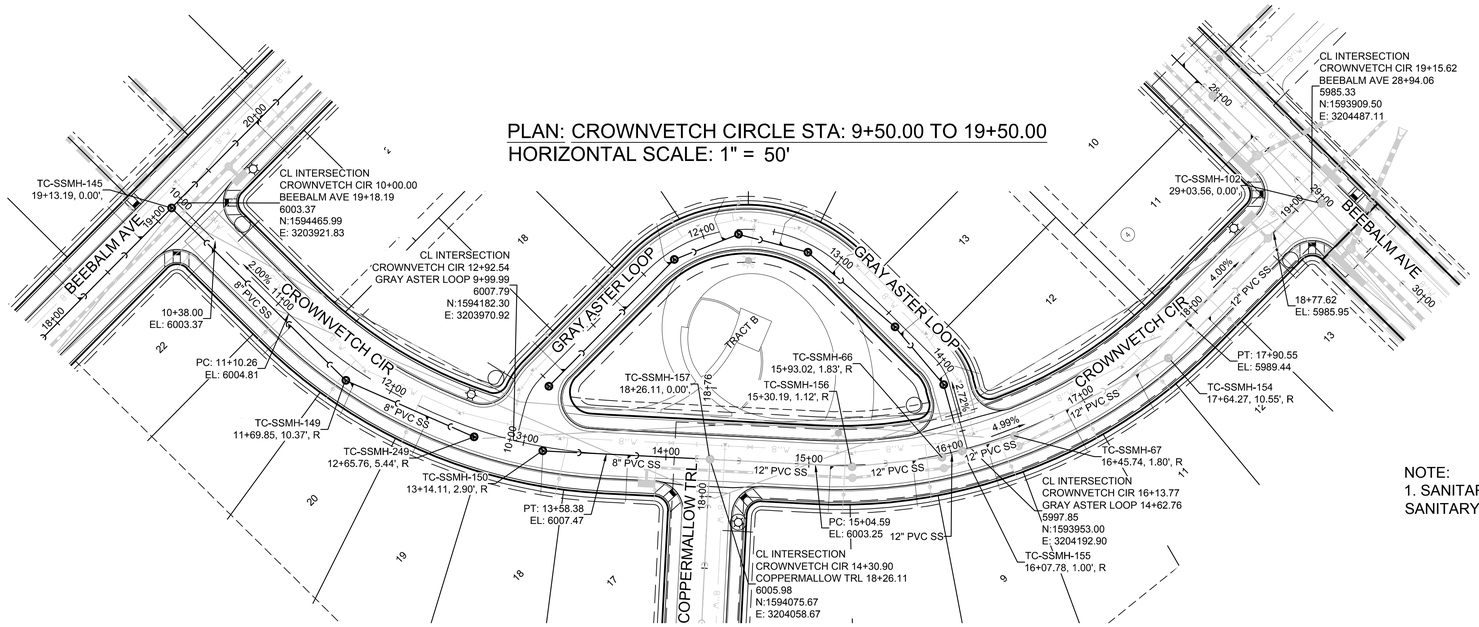

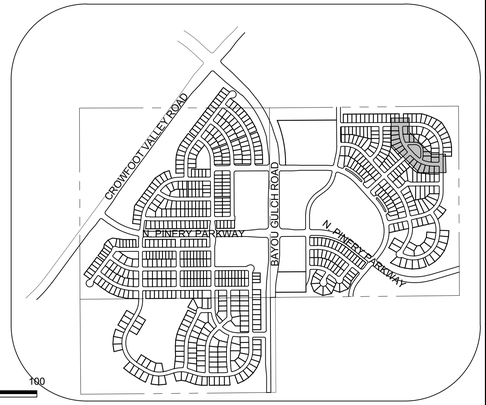

KEYMAP
N.T.S.

NOTE:
1. SANITARY MAIN INSTALLED WITH FILING 1, SANITARY SERVICES INSTALLED WITH FILING 10.

LEGEND

2	BLOCK NUMBER		PROPOSED RANGE POINT
A	LOT TYPE		CENTERLINE
6	LOT NUMBER		RIGHT-OF-WAY
	PROPOSED BUTTERFLY VALVE		PROPERTY LINE
	PROPOSED CAP WITH END OF LINE BLOWOFF		EDGE OF PAVEMENT
	PROPOSED REDUCER		PROPOSED DIRECTION OF FLOW
	PROPOSED VALVE	1.0%	PROPOSED SLOPE & DIRECTION
	PROPOSED FIRE HYDRANT	5615	EXISTING 5' CONTOUR
	PROPOSED WL FITTING WITH THRUST BLOCK	5616	EXISTING 1' CONTOUR
	PROPOSED FLARED END SECTION	5620	PROPOSED 5' CONTOUR
	PROPOSED LOW POINT BLOW-OFF	5607	PROPOSED 1' CONTOUR
	PROPOSED AIR VALVE		PROPOSED STORM DRAIN
	EXISTING BLOW OFF VALVE		PROPOSED SEWER LINE WITH MANHOLE
	EXISTING VALVE		PROPOSED SEWER LATERAL
	EXISTING FIRE HYDRANT	8"W	PROPOSED WATER LINE
	PROPOSED LIGHT POLE		PROPOSED WATER LATERAL W/ METER
	PROPOSED SIDEWALK	RW	EXISTING 60" RAW WATER LINE
	PROPOSED SIDEWALK RAMP		SECTION LINE
10.00	EXISTING ELEVATION		FILING BOUNDARY
10.00	PROPOSED DESIGN ELEVATION	FO	EXISTING FIBER OPTIC LINE
	PROPOSED STORM DRAIN INLET	HV	EXISTING OVERHEAD HIGH VOLTAGE LINE
4 5 6	PROPOSED STORM DRAIN MANHOLE	TEL	EXISTING TELEPHONE LINE

ABBREVIATIONS

AD	ANGLE DIFFERENCE	N.T.S.	NOT TO SCALE
BVC	BEGIN VERTICAL CURVE	PL	PROPERTY LINE
BVP	BEGIN VERTICAL PROFILE	PVC	POLYVINYL CHLORIDE
CRR	CURB RETURN RADIUS	PVI	PT. OF VERTICAL INTERSECTION
EL	ELEVATION	PVT	POINT OF VERTICAL TANGENT
EP	EDGE OF PAVEMENT	RCBC	REINFORCED CONCRETE BOX CULVERT
EVC	END VERTICAL CURVE	RCP	REINFORCED CONCRETE PIPE
EVP	END VERTICAL PROFILE	ROW	RIGHT OF WAY
FG	FINISHED GROUND	SD	STORM DRAIN
FL	FLOW LINE	SL	SECTION LINE
GV	GATE VALVE	SS	SANITARY SEWER
HA	HYDRANT ASSEMBLY	STA	STATION
HCR	HANDICAP CURB RAMP	T.O.P.	TOP OF PIPE
HP	HIGH POINT	UE	UTILITY EASEMENT
INV	INVERT	VC	VERTICAL CURVE
K	CURVATURE COEFFICIENT	WL	WATER LINE
LF	LINEAR FEET	WSE	WATER SURFACE ELEVATION
MH	MANHOLE		

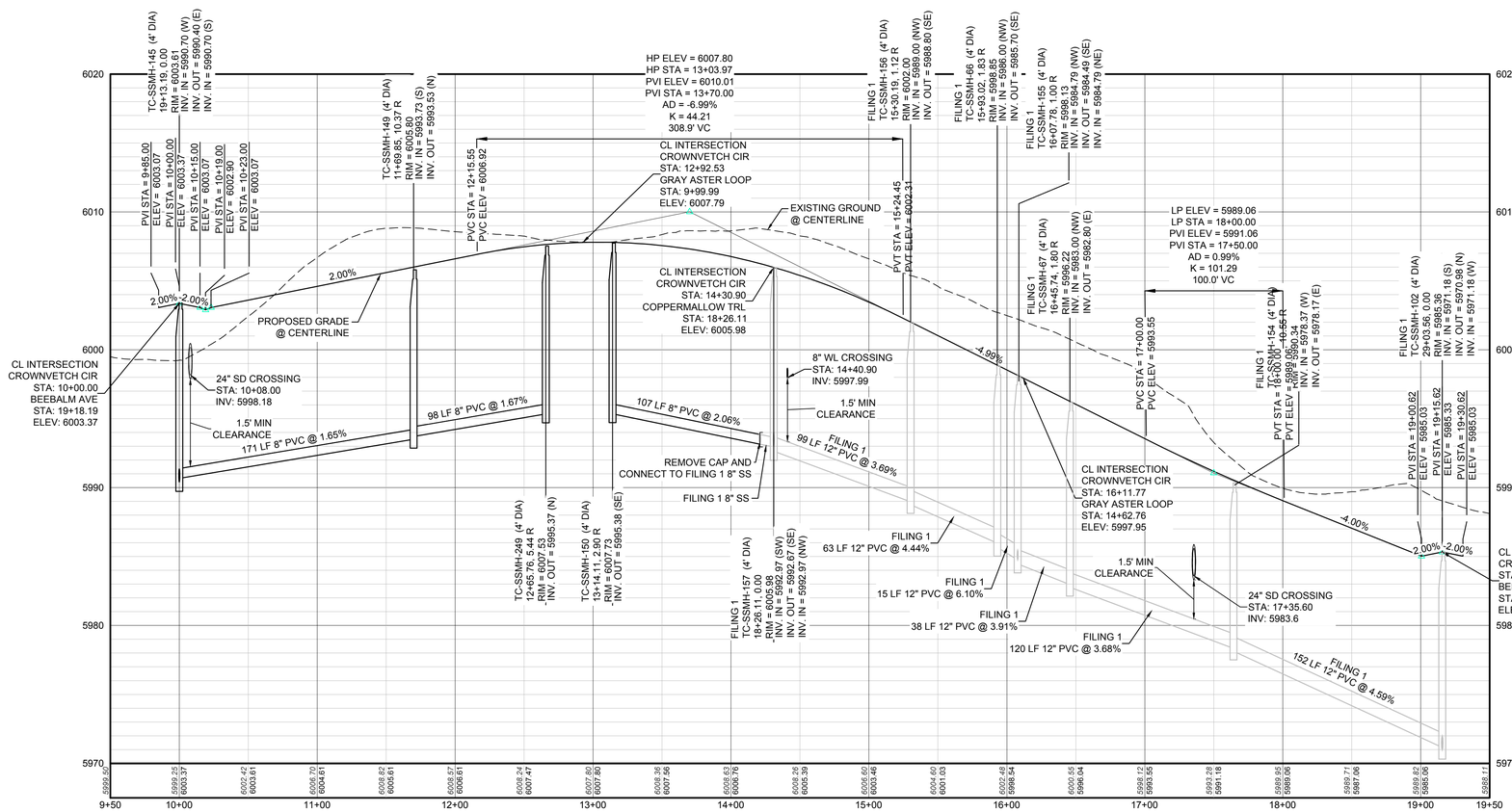

PROFILE: CROWNVETCH CIR STA: 9+50.00 TO 19+50.00
HORIZONTAL: 1" = 50'
VERTICAL: 1" = 5'

CALL 811
TWO WORKING DAYS
BEFORE YOU DIG
UNCC UTILITY NOTIFICATION CENTER OF COLORADO
1-800-922-1987

BENCHMARK
DOUGLAS COUNTY CONTROL POINT KNOWN AS 1.060032, BEING A 3-1/4" ALUMINUM CAP, BEING LOCATED IN THE SOUTHWEST QUARTER OF SECTION 33, TOWNSHIP 6 SOUTH, RANGE 66 WEST OF THE SIXTH PRINCIPAL MERIDIAN, HAVING A PUBLISHED ELEVATION OF 1799.2870 METERS (5903.13 FEET) NAVD '88 DATUM.

BASIS OF BEARINGS:
THE EAST LINE OF THE NORTHEAST QUARTER OF SAID SECTION 9 BEING MONUMENTED AT THE NORTHEAST CORNER OF SAID SECTION 9 BY A 3-1/4" ALUMINUM CAP STAMPED LS 23053 AND AT THE EAST QUARTER CORNER OF SAID SECTION 9 BY A 2-1/2" ALUMINUM CAP STAMPED LS 6935 BEING CONSIDERED TO BEAR SOUTH 00°15'06" EAST, 2648.70 FEET.

PREPARED UNDER THE SUPERVISION OF

BRIAN P. WILSON
COLORADO P.E. 0050067

No.	Revisions	Date	Init.	Appr.	Date

CVL CONSULTANTS
10333 E. Dry Creek Rd.
Suite 240
Englewood, CO 80112
Tel: (720) 482-9526
Fax: (720) 482-9546

E5X MANAGEMENT
7353 South Alton Way
CENTENNIAL, CO 80112

TRAILS AT CROWFOOT
FILING 10 CONSTRUCTION DRAWINGS
SANITARY SEWER PLAN AND PROFILE
CROWNVETCH CIRCLE

SCALE: AS SHOWN
DRAWN BY: JLR
CHECKED BY: JJJ
DATE: SEPTEMBER 2017
FILE NO: 8130283701
SHEET NUMBER 9

N:\PROJECTS\HESS RANCH\CAD\ENGINEERING\SHEET SETS\CD'S\F10\PARKER WATER AND SANITATION\SANITARY PLAN AND PROFILE\CROWNVETCH CIRCLE.DWG, CODYA, 8/23/2017 3:16 PM

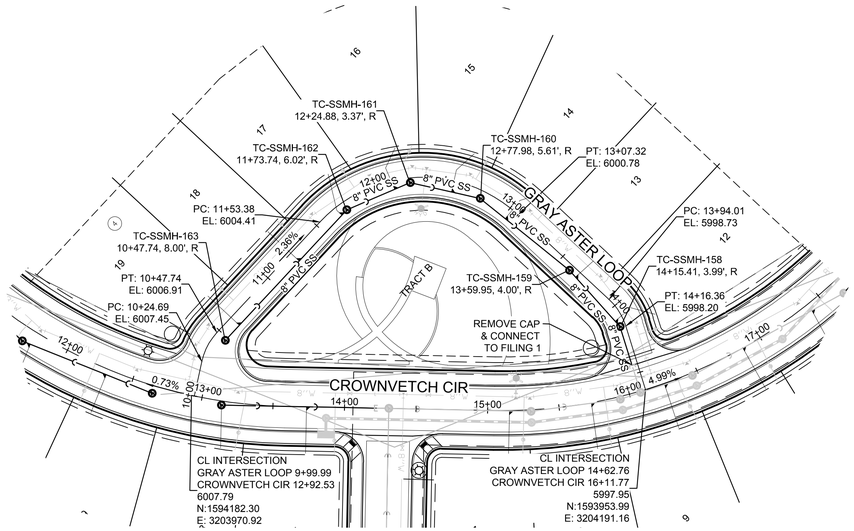

PLAN: GRAY ASTER LOOP STA: 9+50.00 TO 15+50.00
HORIZONTAL SCALE: 1" = 50'

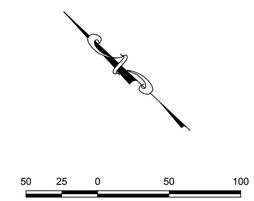

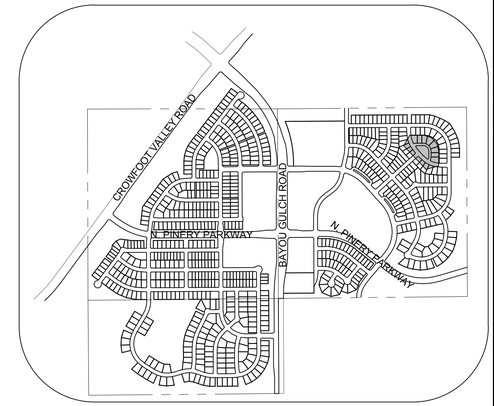

KEYMAP
N.T.S.

LEGEND

- BLOCK NUMBER
- LOT TYPE
- LOT NUMBER
- PROPOSED BUTTERFLY VALVE
- PROPOSED CAP WITH END OF LINE BLOWOFF
- PROPOSED REDUCER
- PROPOSED VALVE
- PROPOSED FIRE HYDRANT
- PROPOSED WL FITTING WITH THRUST BLOCK
- PROPOSED FLARED END SECTION
- PROPOSED LOW POINT BLOW-OFF
- PROPOSED AIR VALVE
- EXISTING BLOW OFF VALVE
- EXISTING VALVE
- EXISTING FIRE HYDRANT
- PROPOSED LIGHT POLE
- PROPOSED SIDEWALK
- PROPOSED SIDEWALK RAMP
- EXISTING ELEVATION
- PROPOSED DESIGN ELEVATION
- PROPOSED STORM DRAIN INLET
- PROPOSED STORM DRAIN MANHOLE
- PROPOSED RANGE POINT
- CENTERLINE
- RIGHT-OF-WAY
- PROPERTY LINE
- EDGE OF PAVEMENT
- PROPOSED DIRECTION OF FLOW
- PROPOSED SLOPE & DIRECTION
- EXISTING 5' CONTOUR
- EXISTING 1' CONTOUR
- PROPOSED 5' CONTOUR
- PROPOSED 1' CONTOUR
- PROPOSED STORM DRAIN
- PROPOSED SEWER LINE WITH MANHOLE
- PROPOSED SEWER LATERAL
- PROPOSED WATER LINE
- PROPOSED WATER LATERAL W/ METER
- EXISTING 60" RAW WATER LINE
- SECTION LINE
- FILING BOUNDARY
- EXISTING FIBER OPTIC LINE
- EXISTING OVERHEAD HIGH VOLTAGE LINE
- EXISTING TELEPHONE LINE

ABBREVIATIONS

AD	ANGLE DIFFERENCE	N.T.S.	NOT TO SCALE
BVC	BEGIN VERTICAL CURVE	PL	PROPERTY LINE
BVP	BEGIN VERTICAL PROFILE	PVC	POLYVINYL CHLORIDE
CRR	CURB RETURN RADIUS	PVI	PT. OF VERTICAL INTERSECTION
EL	ELEVATION	PVT	POINT OF VERTICAL TANGENT
EP	EDGE OF PAVEMENT	RCBC	REINFORCED CONCRETE BOX CULVERT
EVC	END VERTICAL CURVE	RCP	REINFORCED CONCRETE PIPE
EVP	END VERTICAL PROFILE	ROW	RIGHT OF WAY
FG	FINISHED GROUND	SD	STORM DRAIN
FL	FLOW LINE	SL	SECTION LINE
GV	GATE VALVE	SS	SANITARY SEWER
HA	HYDRANT ASSEMBLY	STA	STATION
HCR	HANDICAP CURB RAMP	T.O.P.	TOP OF PIPE
HP	HIGH POINT	UE	UTILITY EASEMENT
INV	INVERT	VC	VERTICAL CURVE
K	CURVATURE COEFFICIENT	WL	WATER LINE
LF	LINEAR FEET	WSE	WATER SURFACE ELEVATION
MH	MANHOLE		

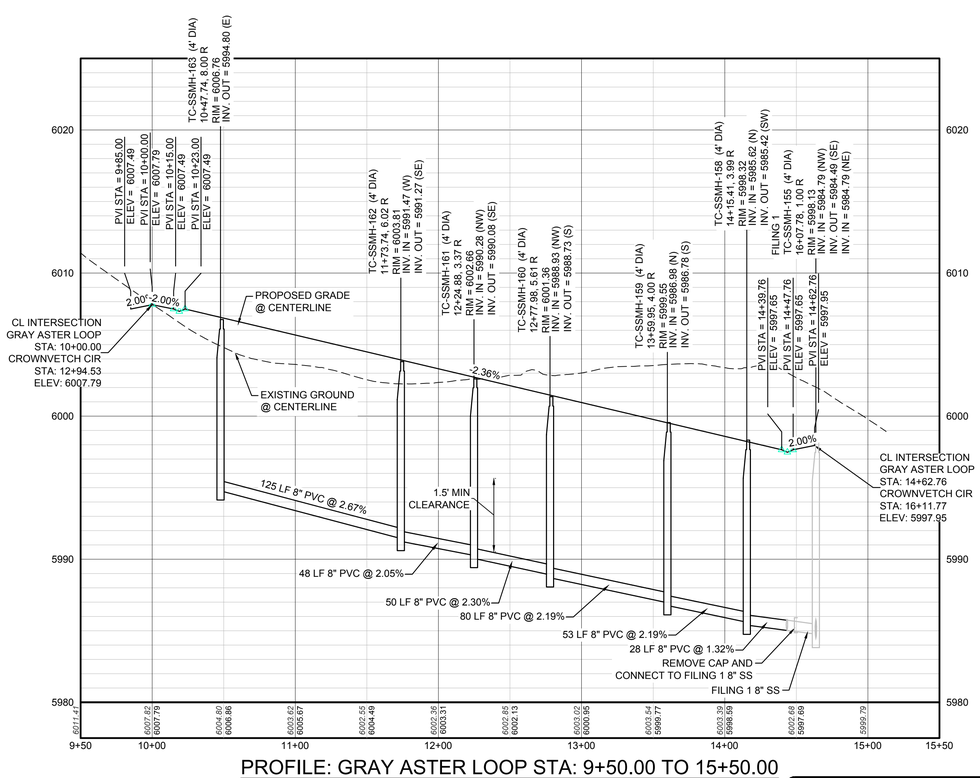

PROFILE: GRAY ASTER LOOP STA: 9+50.00 TO 15+50.00
HORIZONTAL: 1" = 50'
VERTICAL: 1" = 5'

CALL 811
TWO WORKING DAYS
BEFORE YOU DIG
1-800-922-1987
UNCC UTILITY NOTIFICATION CENTER OF COLORADO

BENCHMARK
DOUGLAS COUNTY CONTROL POINT KNOWN AS 1.060032, BEING A 3-1/4" ALUMINUM CAP, BEING LOCATED IN THE SOUTHWEST QUARTER OF SECTION 33, TOWNSHIP 6 SOUTH, RANGE 66 WEST OF THE SIXTH PRINCIPAL MERIDIAN, HAVING A PUBLISHED ELEVATION OF 1799.2870 METERS (5903.13 FEET) NAVD '88 DATUM.

BASIS OF BEARINGS:
THE EAST LINE OF THE NORTHEAST QUARTER OF SAID SECTION 9 BEING MONUMENTED AT THE NORTHEAST CORNER OF SAID SECTION 9 BY A 3-1/4" ALUMINUM CAP STAMPED LS 23053 AND AT THE EAST QUARTER CORNER OF SAID SECTION 9 BY A 2-1/2" ALUMINUM CAP STAMPED LS 6935 BEING CONSIDERED TO BEAR SOUTH 00°15'06" EAST, 2648.70 FEET.

PREPARED UNDER THE SUPERVISION OF

BRIAN P. WILSON
COLORADO P.E. 0050067

No.	Revisions	Date	Init.	Appr.	Date

10333 E. Dry Creek Rd.
Suite 240
Englewood, CO 80112
Tel: (720) 482-9526
Fax: (720) 482-9546
CVL CONSULTANTS

E5X MANAGEMENT
7353 South Alton Way
CENTENNIAL, CO 80112

TRAILS AT CROWFOOT
FILING 10 CONSTRUCTION DRAWINGS
SANITARY SEWER PLAN AND PROFILE
GRAY ASTER LOOP

SCALE: AS SHOWN
FILE NO: 8130283701
DRAWN BY: JLR
CHECKED BY: JJJ
DATE: SEPTEMBER 2017
SHEET NUMBER 10

N:\PROJECTS\HSS RANCH\CAD\ENGINEERING\SHEET SETS\CD'S\F10\PARKER WATER AND SANITATION\SANITARY PLAN AND PROFILE\GRAY ASTER LOOP.DWG, CODYA, 8/23/2017 3:22 PM

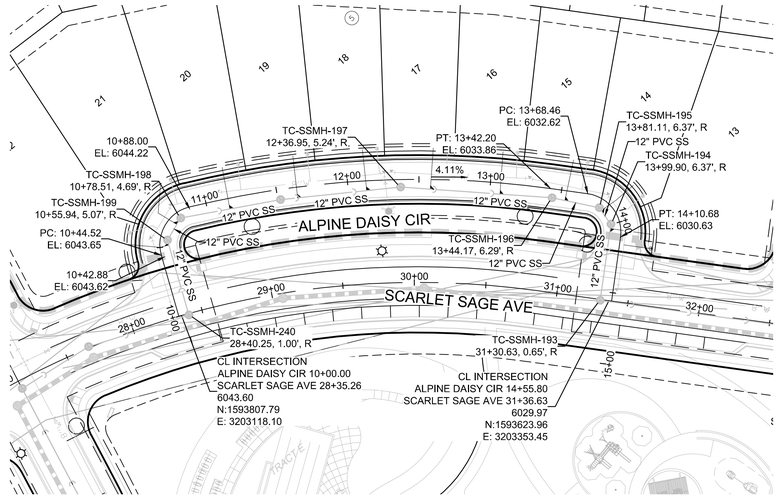

PLAN: ALPINE DAISY CIR STA: 9+50.00 TO 15+00.00
HORIZONTAL SCALE: 1" = 50'

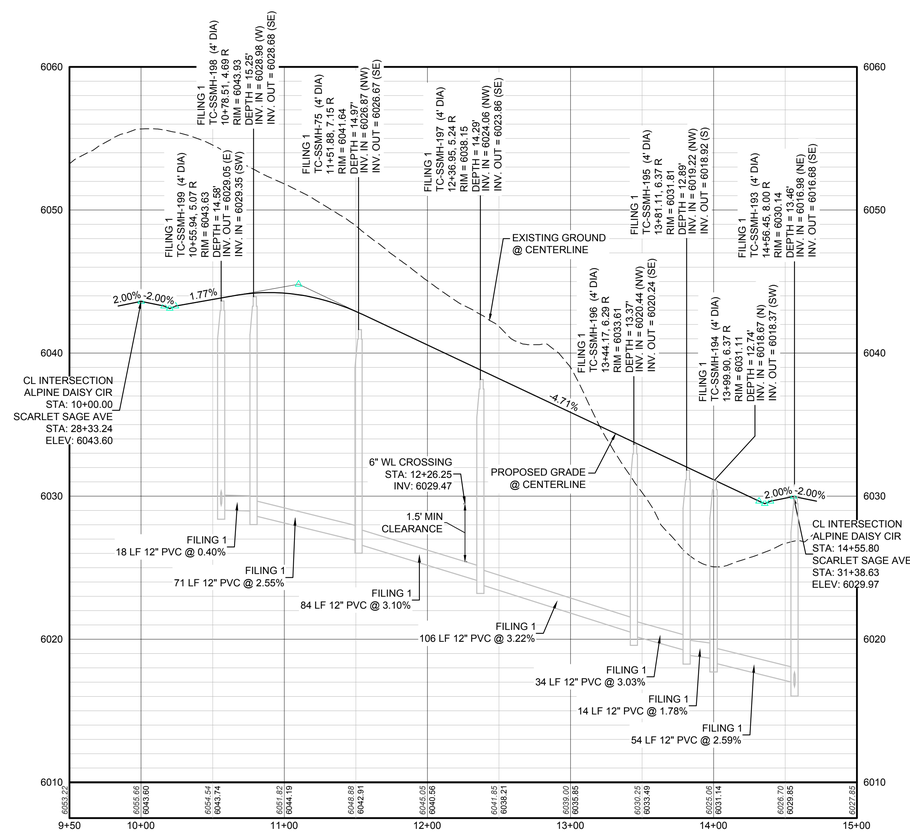

PROFILE: ALPINE DAISY CIR STA: 9+50.00 TO 15+00.00
HORIZONTAL: 1" = 50'
VERTICAL: 1" = 5'

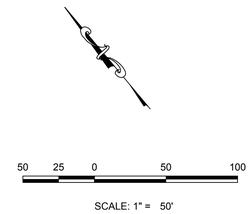

NOTE:
1. SANITARY MAIN INSTALLED WITH FILING 1, SANITARY SERVICES TO BE INSTALLED WITH FILING 10

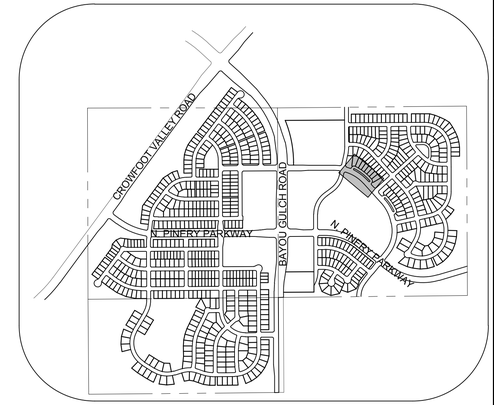

KEYMAP
N.T.S.

LEGEND

2	BLOCK NUMBER		PROPOSED RANGE POINT
A	LOT TYPE		CENTERLINE
6	LOT NUMBER		RIGHT-OF-WAY
	PROPOSED BUTTERFLY VALVE		PROPERTY LINE
	PROPOSED CAP WITH END OF LINE BLOWOFF		EDGE OF PAVEMENT
	PROPOSED REDUCER		PROPOSED DIRECTION OF FLOW
	PROPOSED VALVE	1.0%	PROPOSED SLOPE & DIRECTION
	PROPOSED FIRE HYDRANT	5615	EXISTING 5' CONTOUR
	PROPOSED WL FITTING WITH THRUST BLOCK	5616	EXISTING 1' CONTOUR
	PROPOSED FLARED END SECTION	5620	PROPOSED 5' CONTOUR
BO	PROPOSED LOW POINT BLOW-OFF	5607	PROPOSED 1' CONTOUR
AV	PROPOSED AIR VALVE		PROPOSED STORM DRAIN
BO	EXISTING BLOW OFF VALVE		PROPOSED SEWER LINE WITH MANHOLE
	EXISTING VALVE		PROPOSED SEWER LATERAL
	EXISTING FIRE HYDRANT	8"W	PROPOSED WATER LINE
	PROPOSED LIGHT POLE		PROPOSED WATER LATERAL W/ METER
	PROPOSED SIDEWALK	RW	EXISTING 60" RAW WATER LINE
	PROPOSED SIDEWALK RAMP		SECTION LINE
10.00	EXISTING ELEVATION		FILING BOUNDARY
10.00	PROPOSED DESIGN ELEVATION	FO	EXISTING FIBER OPTIC LINE
	PROPOSED STORM DRAIN INLET	HV	EXISTING OVERHEAD HIGH VOLTAGE LINE
4 5 6	PROPOSED STORM DRAIN MANHOLE	TEL	EXISTING TELEPHONE LINE

ABBREVIATIONS

AD	ANGLE DIFFERENCE	N.T.S.	NOT TO SCALE
BVC	BEGIN VERTICAL CURVE	PL	PROPERTY LINE
BVP	BEGIN VERTICAL PROFILE	PVC	POLYVINYL CHLORIDE
CRR	CURB RETURN RADIUS	PVI	PT. OF VERTICAL INTERSECTION
EL	ELEVATION	PVT	POINT OF VERTICAL TANGENT
EP	EDGE OF PAVEMENT	RCBC	REINFORCED CONCRETE BOX CULVERT
EVC	END VERTICAL CURVE	RCP	REINFORCED CONCRETE PIPE
EVP	END VERTICAL PROFILE	ROW	RIGHT OF WAY
FG	FINISHED GROUND	SD	STORM DRAIN
FL	FLOW LINE	SL	SECTION LINE
GV	GATE VALVE	SS	SANITARY SEWER
HA	HYDRANT ASSEMBLY	STA	STATION
HCR	HANDICAP CURB RAMP	T.O.P.	TOP OF PIPE
HP	HIGH POINT	UE	UTILITY EASEMENT
INV	INVERT	VC	VERTICAL CURVE
K	CURVATURE COEFFICIENT	WL	WATER LINE
LF	LINEAR FEET	WSE	WATER SURFACE ELEVATION
MH	MANHOLE		

BENCHMARK
DOUGLAS COUNTY CONTROL POINT KNOWN AS 1.060032, BEING A 3-1/4" ALUMINUM CAP, BEING LOCATED IN THE SOUTHWEST QUARTER OF SECTION 33, TOWNSHIP 6 SOUTH, RANGE 66 WEST OF THE SIXTH PRINCIPAL MERIDIAN, HAVING A PUBLISHED ELEVATION OF 1799.2870 METERS (5903.13 FEET) NAVD '88 DATUM.

BASIS OF BEARINGS:
THE EAST LINE OF THE NORTHEAST QUARTER OF SAID SECTION 9 BEING MONUMENTED AT THE NORTHEAST CORNER OF SAID SECTION 9 BY A 3-1/4" ALUMINUM CAP STAMPED LS 23053 AND AT THE EAST QUARTER CORNER OF SAID SECTION 9 BY A 2-1/2" ALUMINUM CAP STAMPED LS 6935 BEING CONSIDERED TO BEAR SOUTH 00°15'06" EAST, 2648.70 FEET.

PREPARED UNDER THE SUPERVISION OF

BRIAN P. WILSON
COLORADO P.E. 0050067

CALL 811
TWO WORKING DAYS
BEFORE YOU DIG
1-800-922-1987
UNCC UTILITY NOTIFICATION CENTER OF COLORADO

No.	Revisions	Date	Init.	Appr.	Date

CVL CONSULTANTS
10333 E. Dry Creek Rd.
Suite 240
Englewood, CO 80112
Tel: (720) 482-9526
Fax: (720) 482-9546

E5X MANAGEMENT
7353 South Alton Way
CENTENNIAL, CO 80112

TRAILS AT CROWFOOT
FILING 10 CONSTRUCTION DRAWINGS
SANITARY SEWER PLAN AND PROFILE
ALPINE DAISY CIRCLE

SCALE: AS SHOWN
FILE NO: 8130283701
DRAWN BY: KJD
CHECKED BY: JJJ
DATE: SEPTEMBER 2017
SHEET NUMBER 11

N:\PROJECTS\HESS RANCH\CAD\ENGINEERING\SHEET SETS\CD\SF10\PARKER WATER AND SANITATION\SANITARY PLAN AND PROFILE\SCARLET SAGE AVENUE AA.DWG, CODYA, 8/23/2017 3:22 PM

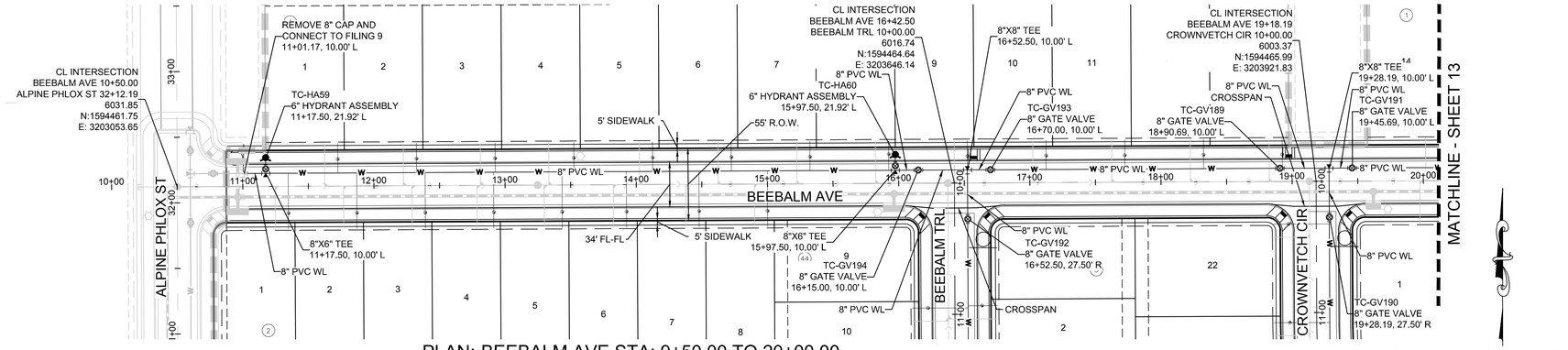

PLAN: BEEBALM AVE STA: 9+50.00 TO 20+00.00
HORIZONTAL SCALE: 1" = 50'

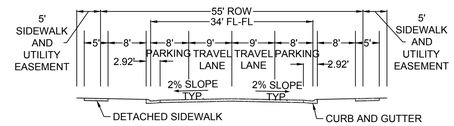

RESIDENTIAL LOCAL

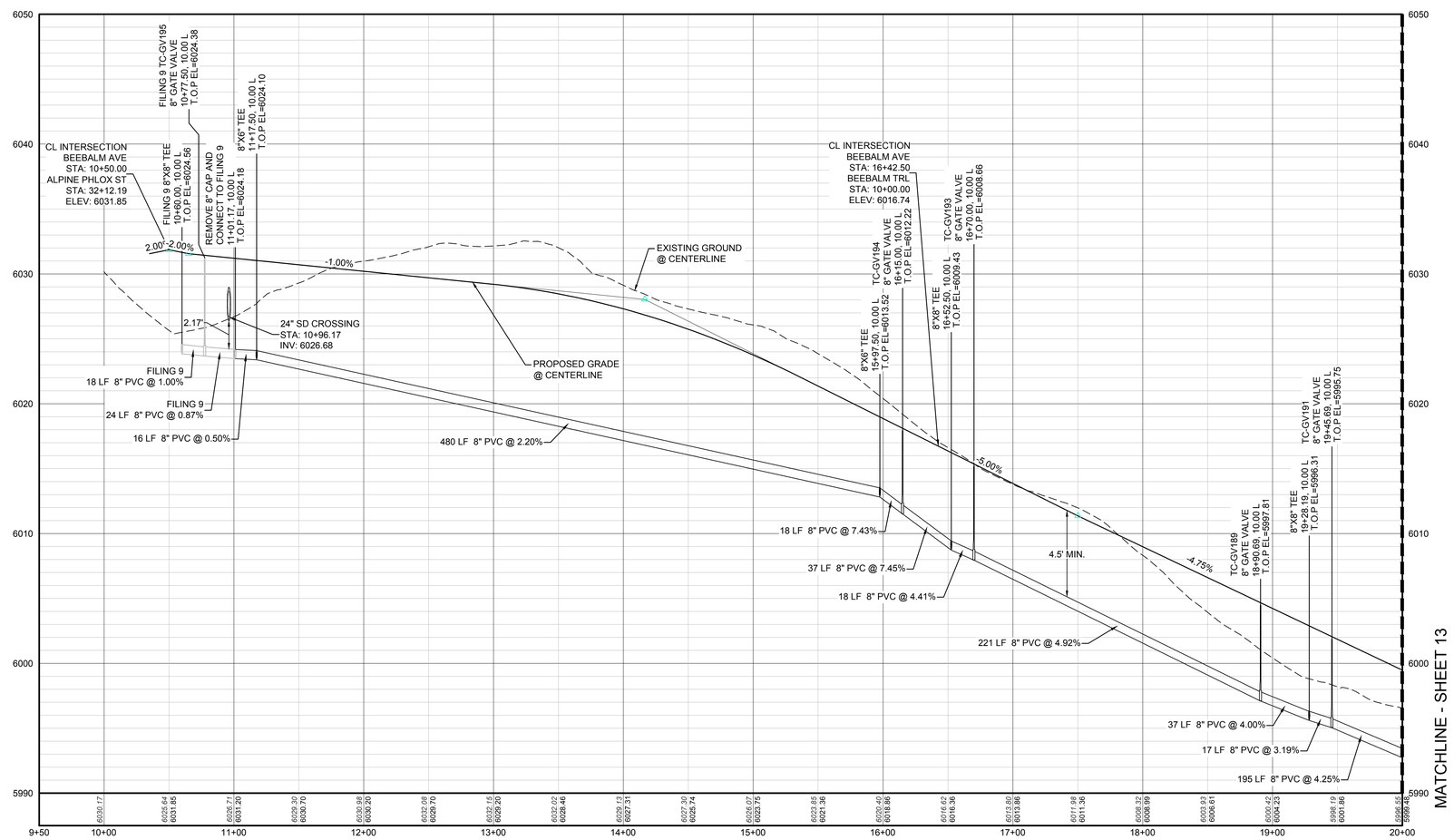

PROFILE: BEEBALM AVE STA: 9+50.00 TO 20+00.00
HORIZONTAL: 1" = 50'
VERTICAL: 1" = 5'

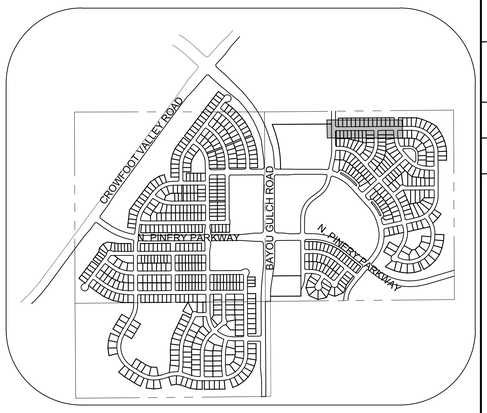

KEYMAP
N.T.S.

LEGEND

2	BLOCK NUMBER		PROPOSED RANGE POINT
A	LOT TYPE		CENTERLINE
6	LOT NUMBER		RIGHT-OF-WAY
	PROPOSED BUTTERFLY VALVE		PROPERTY LINE
	PROPOSED CAP WITH END OF LINE BLOWOFF		EDGE OF PAVEMENT
	PROPOSED REDUCER		PROPOSED DIRECTION OF FLOW
	PROPOSED VALVE	1.0%	PROPOSED SLOPE & DIRECTION
	PROPOSED FIRE HYDRANT	5615	EXISTING 5' CONTOUR
	PROPOSED WL FITTING WITH THRUST BLOCK	5616	EXISTING 1' CONTOUR
	PROPOSED FLARED END SECTION	5620	PROPOSED 5' CONTOUR
BO	PROPOSED LOW POINT BLOW-OFF	5607	PROPOSED 1' CONTOUR
AV	PROPOSED AIR VALVE		PROPOSED STORM DRAIN
BO	EXISTING BLOW OFF VALVE		PROPOSED SEWER LINE WITH MANHOLE
	EXISTING VALVE		PROPOSED SEWER LATERAL
	EXISTING FIRE HYDRANT	8"W	PROPOSED WATER LINE
	PROPOSED LIGHT POLE		PROPOSED WATER LATERAL W/ METER
	PROPOSED SIDEWALK	RW	EXISTING 60" RAW WATER LINE
	PROPOSED SIDEWALK RAMP		SECTION LINE
10.00	EXISTING ELEVATION		FILING BOUNDARY
10.00	PROPOSED DESIGN ELEVATION	FO	EXISTING FIBER OPTIC LINE
	PROPOSED STORM DRAIN INLET	HV	EXISTING OVERHEAD HIGH VOLTAGE LINE
4 5 6	PROPOSED STORM DRAIN MANHOLE	TEL	EXISTING TELEPHONE LINE

ABBREVIATIONS

AD	ANGLE DIFFERENCE	N.T.S.	NOT TO SCALE
BVC	BEGIN VERTICAL CURVE	PL	PROPERTY LINE
BVP	BEGIN VERTICAL PROFILE	PVC	POLYVINYL CHLORIDE
CRR	CURB RETURN RADIUS	PVI	PT. OF VERTICAL INTERSECTION
EL	ELEVATION	PVT	POINT OF VERTICAL TANGENT
EP	EDGE OF PAVEMENT	RCBC	REINFORCED CONCRETE BOX CULVERT
EVC	END VERTICAL CURVE	RCP	REINFORCED CONCRETE PIPE
EVP	END VERTICAL PROFILE	ROW	RIGHT OF WAY
FG	FINISHED GROUND	SD	STORM DRAIN
FL	FLOW LINE	SL	SECTION LINE
GV	GATE VALVE	SS	SANITARY SEWER
HA	HYDRANT ASSEMBLY	STA	STATION
HCR	HANDICAP CURB RAMP	T.O.P.	TOP OF PIPE
HP	HIGH POINT	UE	UTILITY EASEMENT
INV	INVERT	VC	VERTICAL CURVE
K	CURVATURE COEFFICIENT	WL	WATER LINE
LF	LINEAR FEET	WSE	WATER SURFACE ELEVATION
MH	MANHOLE		

CALL 811
TWO WORKING DAYS
BEFORE YOU DIG
1-800-922-1987
UNCC UTILITY NOTIFICATION CENTER OF COLORADO

BENCHMARK
DOUGLAS COUNTY CONTROL POINT KNOWN AS 1.060032, BEING A 3-1/4" ALUMINUM CAP, BEING LOCATED IN THE SOUTHWEST QUARTER OF SECTION 33, TOWNSHIP 6 SOUTH, RANGE 66 WEST OF THE SIXTH PRINCIPAL MERIDIAN, HAVING A PUBLISHED ELEVATION OF 1799.2870 METERS (5903.13 FEET) NAVD '88 DATUM.

BASIS OF BEARINGS:
THE EAST LINE OF THE NORTHEAST QUARTER OF SAID SECTION 9 BEING MONUMENTED AT THE NORTHEAST CORNER OF SAID SECTION 9 BY A 3-1/4" ALUMINUM CAP STAMPED LS 23053 AND AT THE EAST QUARTER CORNER OF SAID SECTION 9 BY A 2-1/2" ALUMINUM CAP STAMPED LS 6935 BEING CONSIDERED TO BEAR SOUTH 00°15'06" EAST, 2648.70 FEET.

PREPARED UNDER THE SUPERVISION OF

BRIAN P. WILSON
COLORADO P.E. 0050067

No.	Revisions	Date	Init.	Appr.	Date

10333 E. Dry Creek Rd.
Suite 240
Englewood, CO 80112
Tel: (720) 482-9526
Fax: (720) 482-9546
CVL CONSULTANTS

E5X MANAGEMENT
7353 South Alton Way
CENTENNIAL, CO 80112

TRAILS AT CROWFOOT
FILING 10 CONSTRUCTION DRAWINGS
WATER PLAN AND PROFILE
BEEBALM AVENUE

SCALE: AS SHOWN
DRAWN BY: RHR
CHECKED BY: JJJ
DATE: SEPTEMBER 2017
FILE NO: 8130283701
SHEET NUMBER 12

N:\PROJECTS\HESS RANCH\CAD\ENGINEERING\SHEET SETS\CD'S\F10\PARKER WATER AND SANITATION\WATER PLAN AND PROFILE\F10 BEEBALM AVENUE WATER.DWG, CODYA, 8/23/2017 3:27 PM

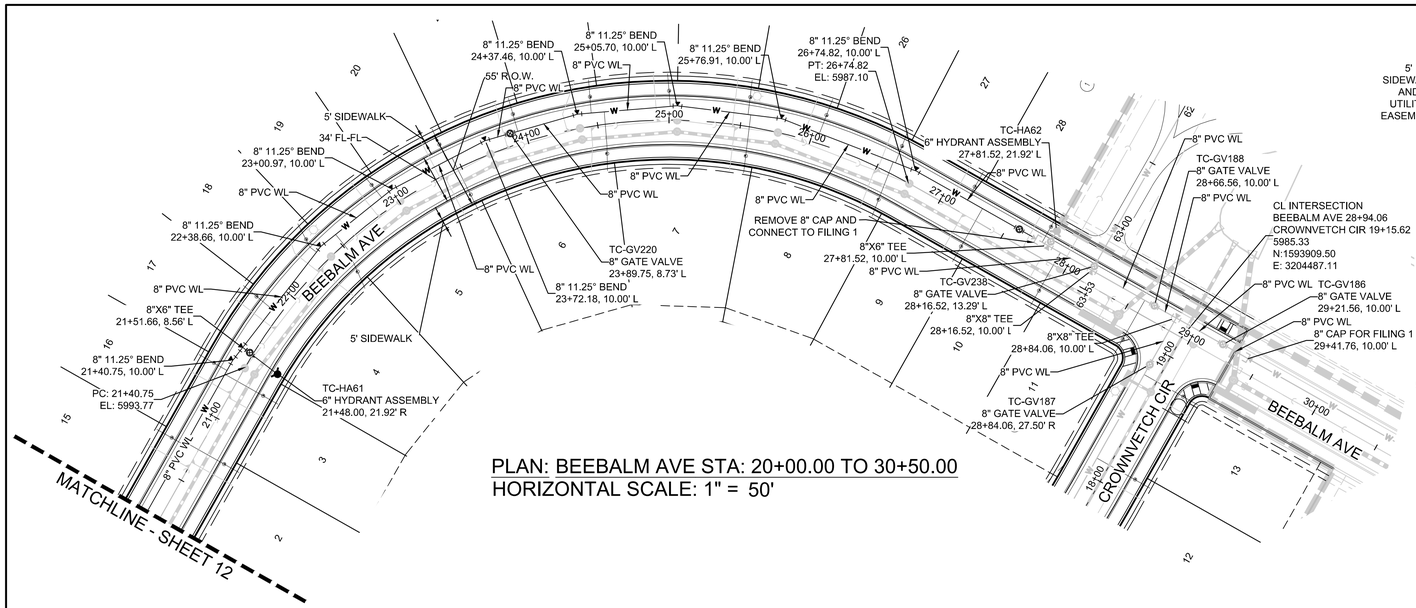

PLAN: BEEBALM AVE STA: 20+00.00 TO 30+50.00
HORIZONTAL SCALE: 1" = 50'

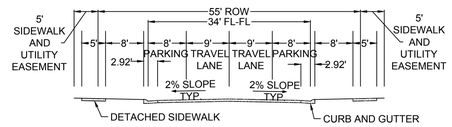

RESIDENTIAL LOCAL

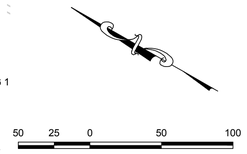

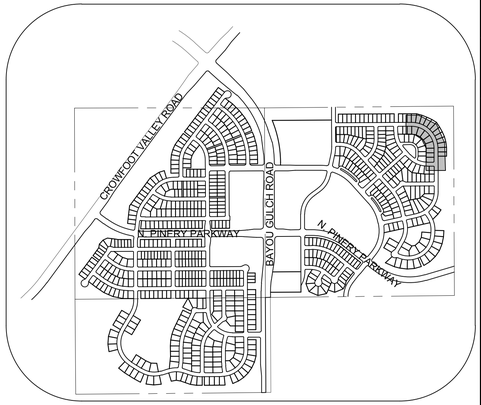

KEYMAP
N.T.S.

LEGEND

2	BLOCK NUMBER		PROPOSED RANGE POINT
A	LOT TYPE		CENTERLINE
6	LOT NUMBER		RIGHT-OF-WAY
	PROPOSED BUTTERFLY VALVE		PROPERTY LINE
	PROPOSED CAP WITH END OF LINE BLOWOFF		EDGE OF PAVEMENT
	PROPOSED REDUCER		PROPOSED DIRECTION OF FLOW
	PROPOSED VALVE	1.0%	PROPOSED SLOPE & DIRECTION
	PROPOSED FIRE HYDRANT	5615	EXISTING 5' CONTOUR
	PROPOSED WL FITTING WITH THRUST BLOCK	5616	EXISTING 1' CONTOUR
	PROPOSED FLARED END SECTION	5620	PROPOSED 5' CONTOUR
BO	PROPOSED LOW POINT BLOW-OFF	5607	PROPOSED 1' CONTOUR
AV	PROPOSED AIR VALVE		PROPOSED STORM DRAIN
BO	EXISTING BLOW OFF VALVE		PROPOSED SEWER LINE WITH MANHOLE
	EXISTING VALVE		PROPOSED SEWER LATERAL
	EXISTING FIRE HYDRANT	8"W	PROPOSED WATER LINE
	PROPOSED LIGHT POLE		PROPOSED WATER LATERAL W/ METER
	PROPOSED SIDEWALK	RW	EXISTING 60" RAW WATER LINE
	PROPOSED SIDEWALK RAMP		SECTION LINE
10.00	EXISTING ELEVATION		FILING BOUNDARY
10.00	PROPOSED DESIGN ELEVATION	FO	EXISTING FIBER OPTIC LINE
	PROPOSED STORM DRAIN INLET	HV	EXISTING OVERHEAD HIGH VOLTAGE LINE
4 5 6	PROPOSED STORM DRAIN MANHOLE	TEL	EXISTING TELEPHONE LINE

ABBREVIATIONS

AD	ANGLE DIFFERENCE	N.T.S.	NOT TO SCALE
BVC	BEGIN VERTICAL CURVE	PL	PROPERTY LINE
BVP	BEGIN VERTICAL PROFILE	PVC	POLYVINYL CHLORIDE
CRR	CURB RETURN RADIUS	PVI	PT. OF VERTICAL INTERSECTION
EL	ELEVATION	PVT	POINT OF VERTICAL TANGENT
EP	EDGE OF PAVEMENT	RCBC	REINFORCED CONCRETE BOX CULVERT
EVC	END VERTICAL CURVE	RCP	REINFORCED CONCRETE PIPE
EVP	END VERTICAL PROFILE	ROW	RIGHT OF WAY
FG	FINISHED GROUND	SD	STORM DRAIN
FL	FLOW LINE	SL	SECTION LINE
GV	GATE VALVE	SS	SANITARY SEWER
HA	HYDRANT ASSEMBLY	STA	STATION
HCR	HANDICAP CURB RAMP	T.O.P.	TOP OF PIPE
HP	HIGH POINT	UE	UTILITY EASEMENT
INV	INVERT	VC	VERTICAL CURVE
K	CURVATURE COEFFICIENT	WL	WATER LINE
LF	LINEAR FEET	WSE	WATER SURFACE ELEVATION
MH	MANHOLE		

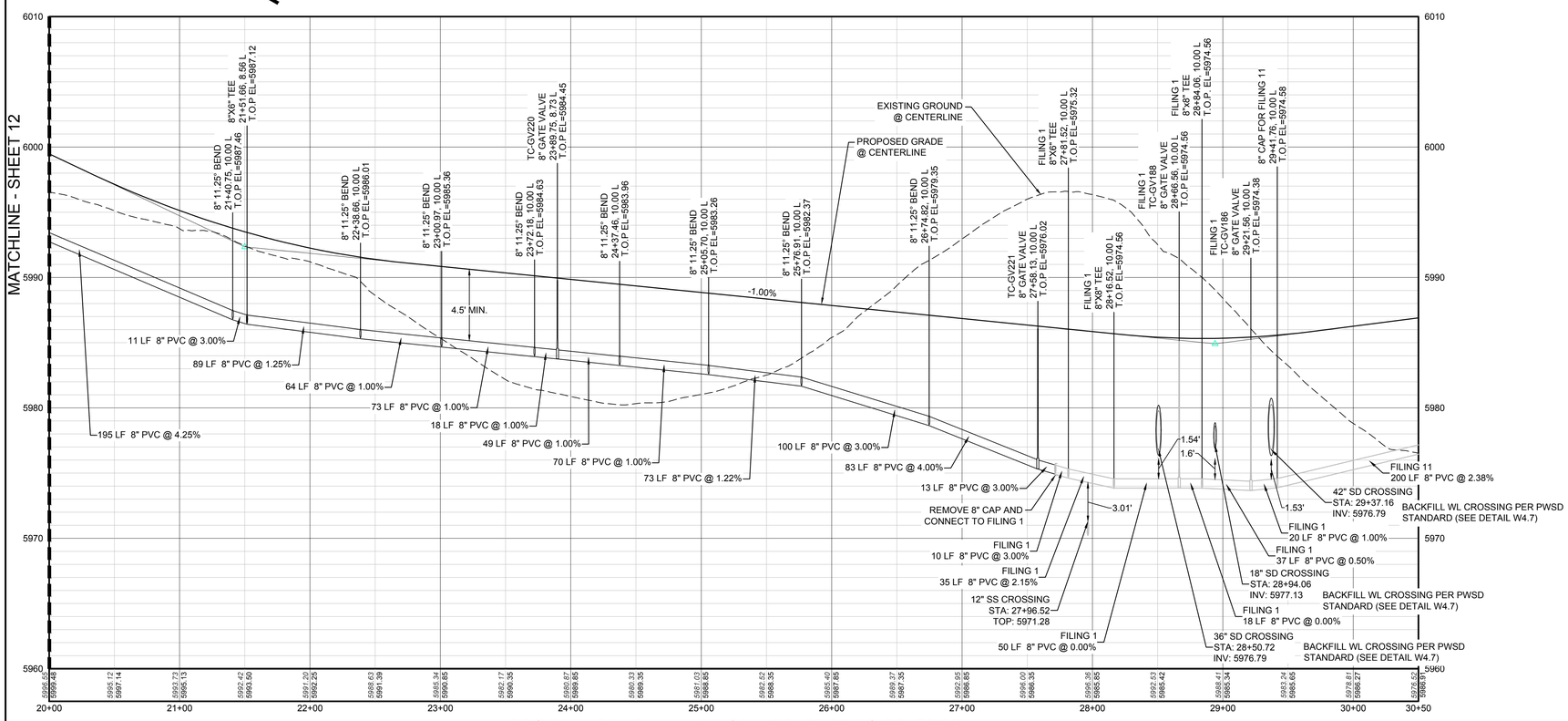

PROFILE: BEEBALM AVE STA: 20+00.00 TO 30+50.00
HORIZONTAL: 1" = 50'
VERTICAL: 1" = 5'

CALL 811
TWO WORKING DAYS
BEFORE YOU DIG
1-800-922-1987
UNCC UTILITY NOTIFICATION CENTER OF COLORADO

BENCHMARK
DOUGLAS COUNTY CONTROL POINT KNOWN AS 1.060032, BEING A 3-1/4" ALUMINUM CAP, BEING LOCATED IN THE SOUTHWEST QUARTER OF SECTION 33, TOWNSHIP 6 SOUTH, RANGE 66 WEST OF THE SIXTH PRINCIPAL MERIDIAN, HAVING A PUBLISHED ELEVATION OF 1799.2870 METERS (5903.13 FEET) NAVD '88 DATUM.

BASIS OF BEARINGS:
THE EAST LINE OF THE NORTHEAST QUARTER OF SAID SECTION 9 BEING MONUMENTED AT THE NORTHEAST CORNER OF SAID SECTION 9 BY A 3-1/4" ALUMINUM CAP STAMPED LS 23053 AND AT THE EAST QUARTER CORNER OF SAID SECTION 9 BY A 2-1/2" ALUMINUM CAP STAMPED LS 6935 BEING CONSIDERED TO BEAR SOUTH 00°15'06" EAST, 2648.70 FEET.

PREPARED UNDER THE SUPERVISION OF

BRIAN P. WILSON
COLORADO P.E. 0050067

No.	Revisions	Date	Init.	Appr.	Date

CVL CONSULTANTS
10333 E. Dry Creek Rd.
Suite 240
Englewood, CO 80112
Tel: (720) 482-9526
Fax: (720) 482-9546

E5X MANAGEMENT
7353 South Alton Way
CENTENNIAL, CO 80112

TRAILS AT CROWFOOT
FILING 10 CONSTRUCTION DRAWINGS
WATER PLAN & PROFILE
BEEBALM AVENUE

SCALE: AS SHOWN
FILE NO: 8130283701
DRAWN BY: RHR
CHECKED BY: JJJ
DATE: SEPTEMBER 2017
SHEET NUMBER 13

N:\PROJECTS\HESS RANCH\CAD\ENGINEERING\SHEET SETS\CD'S\F10\PARKER WATER AND SANITATION\WATER PLAN AND PROFILE\F10 BEEBALM AVENUE WATER.DWG, CODYA, 8/23/2017 3:28 PM

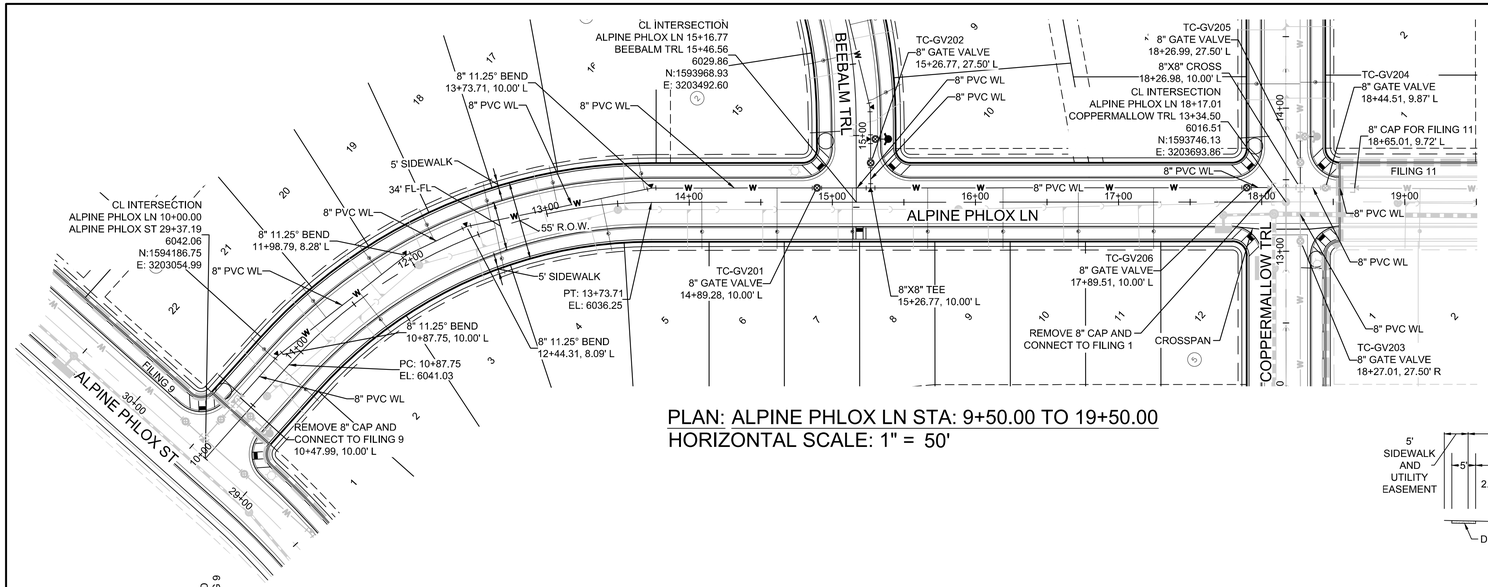

PLAN: ALPINE PHLOX LN STA: 9+50.00 TO 19+50.00
HORIZONTAL SCALE: 1" = 50'

50 25 0 50 100

SCALE: 1" = 50'

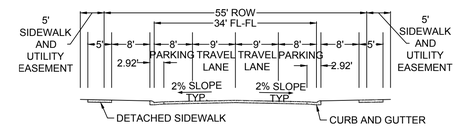

RESIDENTIAL LOCAL

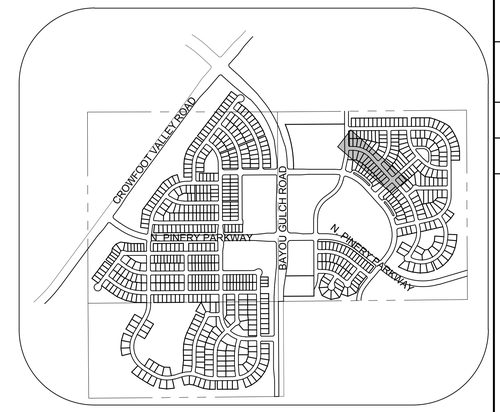

KEYMAP
N.T.S.

LEGEND

2	BLOCK NUMBER		PROPOSED RANGE POINT
A	LOT TYPE		CENTERLINE
6	LOT NUMBER		RIGHT-OF-WAY
	PROPOSED BUTTERFLY VALVE		PROPERTY LINE
	PROPOSED CAP WITH END OF LINE BLOWOFF		EDGE OF PAVEMENT
	PROPOSED REDUCER		PROPOSED DIRECTION OF FLOW
	PROPOSED VALVE	1.0%	PROPOSED SLOPE & DIRECTION
	PROPOSED FIRE HYDRANT	5615	EXISTING 5' CONTOUR
	PROPOSED WL FITTING WITH THRUST BLOCK	5616	EXISTING 1' CONTOUR
	PROPOSED FLARED END SECTION	5620	PROPOSED 5' CONTOUR
	PROPOSED LOW POINT BLOW-OFF	5607	PROPOSED 1' CONTOUR
	PROPOSED AIR VALVE		PROPOSED STORM DRAIN
BO	EXISTING BLOW OFF VALVE		PROPOSED SEWER LINE WITH MANHOLE
	EXISTING VALVE		PROPOSED SEWER LATERAL
	EXISTING FIRE HYDRANT	8"W	PROPOSED WATER LINE
	PROPOSED LIGHT POLE		PROPOSED WATER LATERAL W/ METER
	PROPOSED SIDEWALK	RW	EXISTING 60" RAW WATER LINE
	PROPOSED SIDEWALK RAMP		SECTION LINE
10.00	EXISTING ELEVATION		FILING BOUNDARY
10.00	PROPOSED DESIGN ELEVATION	FO	EXISTING FIBER OPTIC LINE
	PROPOSED STORM DRAIN INLET	HV	EXISTING OVERHEAD HIGH VOLTAGE LINE
4 5 6	PROPOSED STORM DRAIN MANHOLE	TEL	EXISTING TELEPHONE LINE

ABBREVIATIONS

AD	ANGLE DIFFERENCE	N.T.S.	NOT TO SCALE
BVC	BEGIN VERTICAL CURVE	PL	PROPERTY LINE
BVP	BEGIN VERTICAL PROFILE	PVC	POLYVINYL CHLORIDE
CRR	CURB RETURN RADIUS	PVI	PT. OF VERTICAL INTERSECTION
EL	ELEVATION	PVT	POINT OF VERTICAL TANGENT
EP	EDGE OF PAVEMENT	RCBC	REINFORCED CONCRETE BOX CULVERT
EVC	END VERTICAL CURVE	RCP	REINFORCED CONCRETE PIPE
EVP	END VERTICAL PROFILE	ROW	RIGHT OF WAY
FG	FINISHED GROUND	SD	STORM DRAIN
FL	FLOW LINE	SL	SECTION LINE
GV	GATE VALVE	SS	SANITARY SEWER
HA	HYDRANT ASSEMBLY	STA	STATION
HCR	HANDICAP CURB RAMP	T.O.P.	TOP OF PIPE
HP	HIGH POINT	UE	UTILITY EASEMENT
INV	INVERT	VC	VERTICAL CURVE
K	CURVATURE COEFFICIENT	WL	WATER LINE
LF	LINEAR FEET	WSE	WATER SURFACE ELEVATION
MH	MANHOLE		

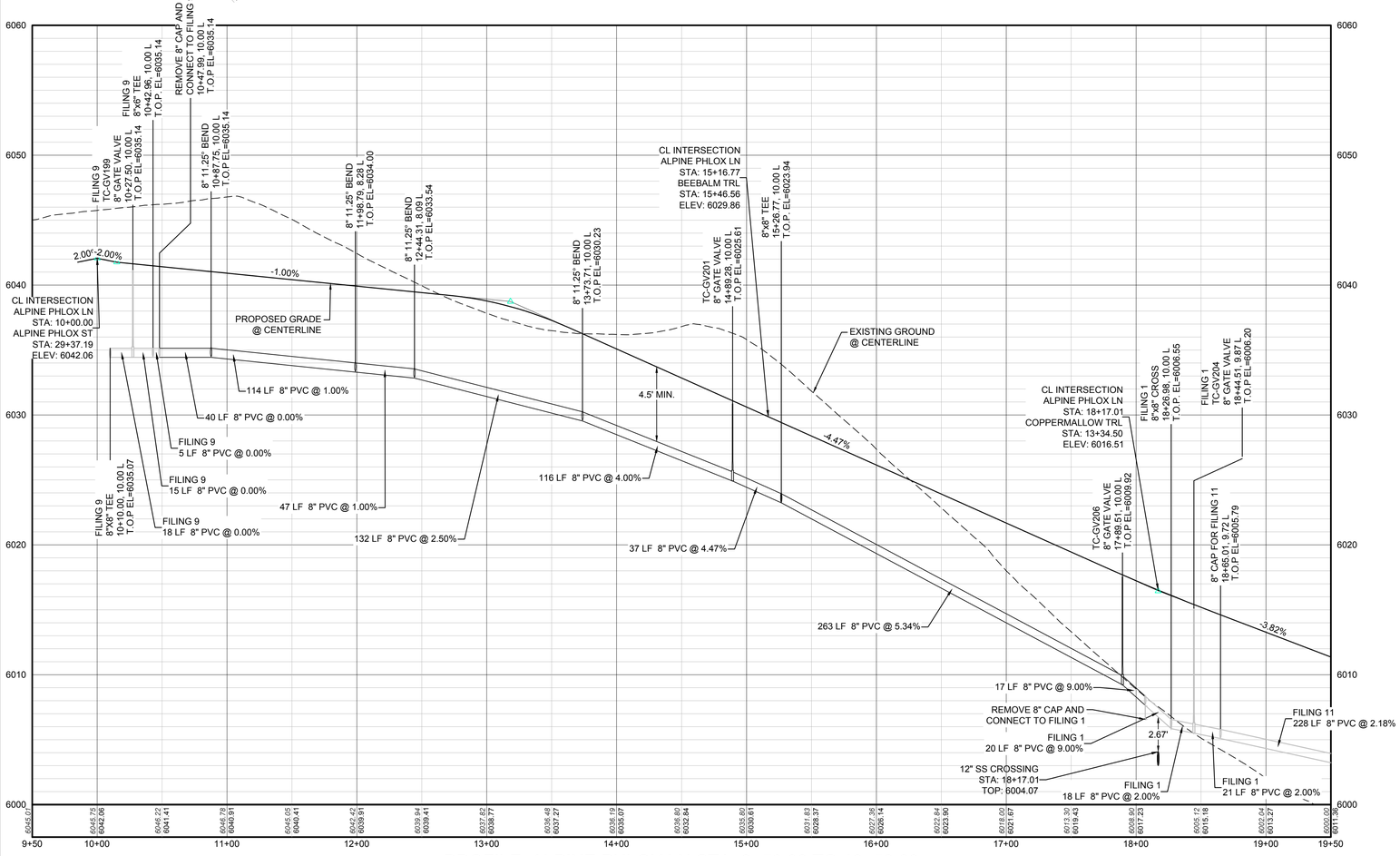

PROFILE: ALPINE PHLOX LN STA: 9+50.00 TO 19+50.00
HORIZONTAL: 1" = 50'
VERTICAL: 1" = 5'

CALL 811
TWO WORKING DAYS
BEFORE YOU DIG
1-800-922-1987
UNCC UTILITY NOTIFICATION CENTER OF COLORADO

BENCHMARK
DOUGLAS COUNTY CONTROL POINT KNOWN AS 1.060032, BEING A 3-1/4" ALUMINUM CAP, BEING LOCATED IN THE SOUTHWEST QUARTER OF SECTION 33, TOWNSHIP 6 SOUTH, RANGE 66 WEST OF THE SIXTH PRINCIPAL MERIDIAN, HAVING A PUBLISHED ELEVATION OF 1799.2870 METERS (5903.13 FEET) NAVD '88 DATUM.

BASIS OF BEARINGS:
THE EAST LINE OF THE NORTHEAST QUARTER OF SAID SECTION 9 BEING MONUMENTED AT THE NORTHEAST CORNER OF SAID SECTION 9 BY A 3-1/4" ALUMINUM CAP STAMPED LS 23053 AND AT THE EAST QUARTER CORNER OF SAID SECTION 9 BY A 2-1/2" ALUMINUM CAP STAMPED LS 6935 BEING CONSIDERED TO BEAR SOUTH 00°15'06" EAST, 2648.70 FEET.

PREPARED UNDER THE SUPERVISION OF

BRIAN P. WILSON
COLORADO P.E. 0050067

No.	Revisions	Date	Init.	Appr.	Date

10333 E. Dry Creek Rd.
Suite 240
Englewood, CO 80112
Tel: (720) 482-9526
Fax: (720) 482-9546
CVL CONSULTANTS

E5X MANAGEMENT
7353 South Alton Way
CENTENNIAL, CO 80112

TRAILS AT CROWFOOT
FILING 10 CONSTRUCTION DRAWINGS
WATER PLAN & PROFILE
ALPINE PHLOX LANE

SCALE: AS SHOWN
FILE NO: 8130283701
DRAWN BY: JRHR
CHECKED BY: JJJ
DATE: SEPTEMBER 2017
SHEET NUMBER 14

N:\PROJECTS\HESS RANCH\CAD\ENGINEERING\SHEET SETS\CD'S\F10\PARKER WATER AND SANITATION\WATER PLAN AND PROFILE\ALPINE PHLOX LANE.DWG, CODYA, 8/23/2017 3:33 PM

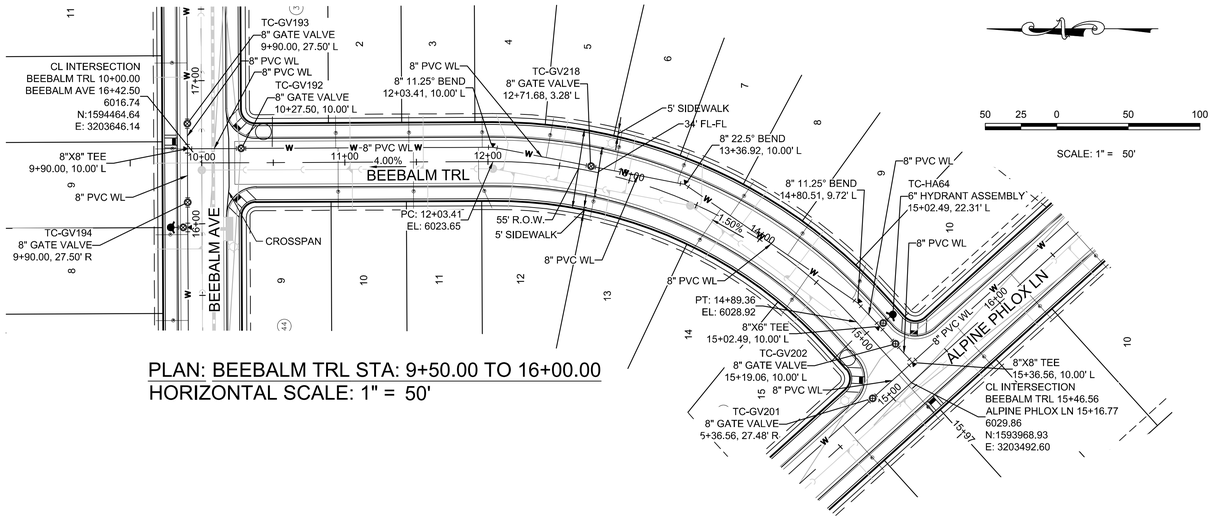

PLAN: BEEBALM TRL STA: 9+50.00 TO 16+00.00
HORIZONTAL SCALE: 1" = 50'

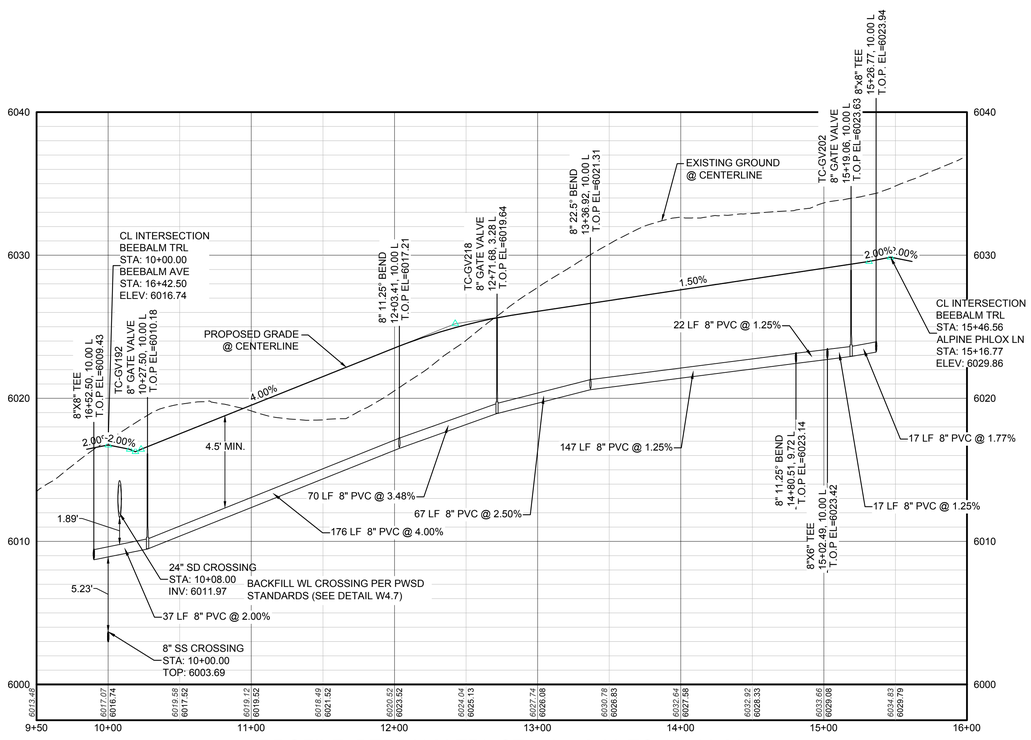

PROFILE: BEEBALM TRL STA: 9+50.00 TO 16+00.00
HORIZONTAL: 1" = 50'
VERTICAL: 1" = 5'

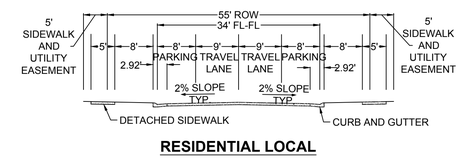

RESIDENTIAL LOCAL

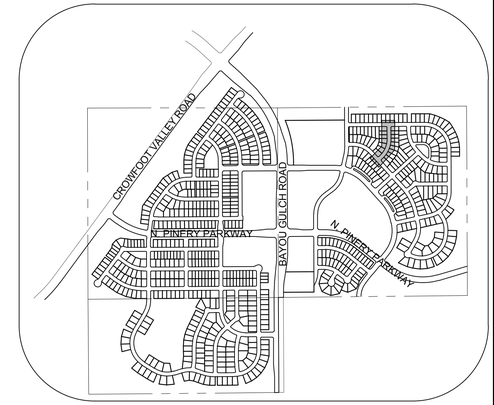

KEYMAP
N.T.S.

LEGEND

2	BLOCK NUMBER		PROPOSED RANGE POINT
A	LOT TYPE		CENTERLINE
6	LOT NUMBER		RIGHT-OF-WAY
	PROPOSED BUTTERFLY VALVE		PROPERTY LINE
	PROPOSED CAP WITH END OF LINE BLOWOFF		EDGE OF PAVEMENT
	PROPOSED REDUCER		PROPOSED DIRECTION OF FLOW
	PROPOSED VALVE	1.0%	PROPOSED SLOPE & DIRECTION
	PROPOSED FIRE HYDRANT	5615	EXISTING 5' CONTOUR
	PROPOSED WL FITTING WITH THRUST BLOCK	5616	EXISTING 1' CONTOUR
	PROPOSED FLARED END SECTION	5620	PROPOSED 5' CONTOUR
LP	PROPOSED LOW POINT BLOW-OFF	5607	PROPOSED 1' CONTOUR
AV	PROPOSED AIR VALVE		PROPOSED STORM DRAIN
BO	EXISTING BLOW OFF VALVE		PROPOSED SEWER LINE WITH MANHOLE
	EXISTING VALVE		PROPOSED SEWER LATERAL
	EXISTING FIRE HYDRANT	8"W	PROPOSED WATER LINE
	PROPOSED LIGHT POLE		PROPOSED WATER LATERAL W/ METER
	PROPOSED SIDEWALK	RW	EXISTING 60" RAW WATER LINE
	PROPOSED SIDEWALK RAMP		SECTION LINE
10.00	EXISTING ELEVATION		FILING BOUNDARY
10.00	PROPOSED DESIGN ELEVATION	FO	EXISTING FIBER OPTIC LINE
	PROPOSED STORM DRAIN INLET	HV	EXISTING OVERHEAD HIGH VOLTAGE LINE
4 5 6	PROPOSED STORM DRAIN MANHOLE	TEL	EXISTING TELEPHONE LINE

ABBREVIATIONS

AD	ANGLE DIFFERENCE	N.T.S.	NOT TO SCALE
BVC	BEGIN VERTICAL CURVE	PL	PROPERTY LINE
BVP	BEGIN VERTICAL PROFILE	PVC	POLYVINYL CHLORIDE
CRR	CURB RETURN RADIUS	PVI	PT. OF VERTICAL INTERSECTION
EL	ELEVATION	PVT	POINT OF VERTICAL TANGENT
EP	EDGE OF PAVEMENT	RCBC	REINFORCED CONCRETE BOX CULVERT
EVC	END VERTICAL CURVE	RCP	REINFORCED CONCRETE PIPE
EVP	END VERTICAL PROFILE	ROW	RIGHT OF WAY
FG	FINISHED GROUND	SD	STORM DRAIN
FL	FLOW LINE	SL	SECTION LINE
GV	GATE VALVE	SS	SANITARY SEWER
HA	HYDRANT ASSEMBLY	STA	STATION
HCR	HANDICAP CURB RAMP	T.O.P.	TOP OF PIPE
HP	HIGH POINT	UE	UTILITY EASEMENT
INV	INVERT	VC	VERTICAL CURVE
K	CURVATURE COEFFICIENT	WL	WATER LINE
LF	LINEAR FEET	WSE	WATER SURFACE ELEVATION
MH	MANHOLE		

CALL 811
TWO WORKING DAYS
BEFORE YOU DIG
1-800-922-1987
UNCC UTILITY NOTIFICATION CENTER OF COLORADO

BENCHMARK
DOUGLAS COUNTY CONTROL POINT KNOWN AS 1.060032, BEING A 3-1/4" ALUMINUM CAP, BEING LOCATED IN THE SOUTHWEST QUARTER OF SECTION 33, TOWNSHIP 6 SOUTH, RANGE 66 WEST OF THE SIXTH PRINCIPAL MERIDIAN, HAVING A PUBLISHED ELEVATION OF 1799.2870 METERS (5903.13 FEET) NAVD '88 DATUM.

BASIS OF BEARINGS:
THE EAST LINE OF THE NORTHEAST QUARTER OF SAID SECTION 9 BEING MONUMENTED AT THE NORTHEAST CORNER OF SAID SECTION 9 BY A 3-1/4" ALUMINUM CAP STAMPED LS 23053 AND AT THE EAST QUARTER CORNER OF SAID SECTION 9 BY A 2-1/2" ALUMINUM CAP STAMPED LS 6935 BEING CONSIDERED TO BEAR SOUTH 00°15'06" EAST, 2648.70 FEET.

PREPARED UNDER THE SUPERVISION OF

BRIAN P. WILSON
COLORADO P.E. 0050067

No.	Revisions	Date	Init.	Appr.	Date

10333 E. Dry Creek Rd.
Suite 240
Englewood, CO 80112
Tel: (720) 482-9526
Fax: (720) 482-9546
CVL CONSULTANTS

E5X MANAGEMENT
7353 South Alton Way
CENTENNIAL, CO 80112

TRAILS AT CROWFOOT
FILING 10 CONSTRUCTION DRAWINGS
WATER PLAN & PROFILE
BEEBALM TRAIL

SCALE: AS SHOWN
FILE NO: 8130283701
DRAWN BY: RHR
CHECKED BY: JJJ
DATE: SEPTEMBER 2017
SHEET NUMBER 15

N:\PROJECTS\HESS RANCH\CAD\ENGINEERING\SHEET SETS\CD'S\F10\PARKER WATER AND SANITATION\WATER PLAN AND PROFILE\BEEBALM TRAIL.DWG, CODYA, 8/23/2017 3:39 PM

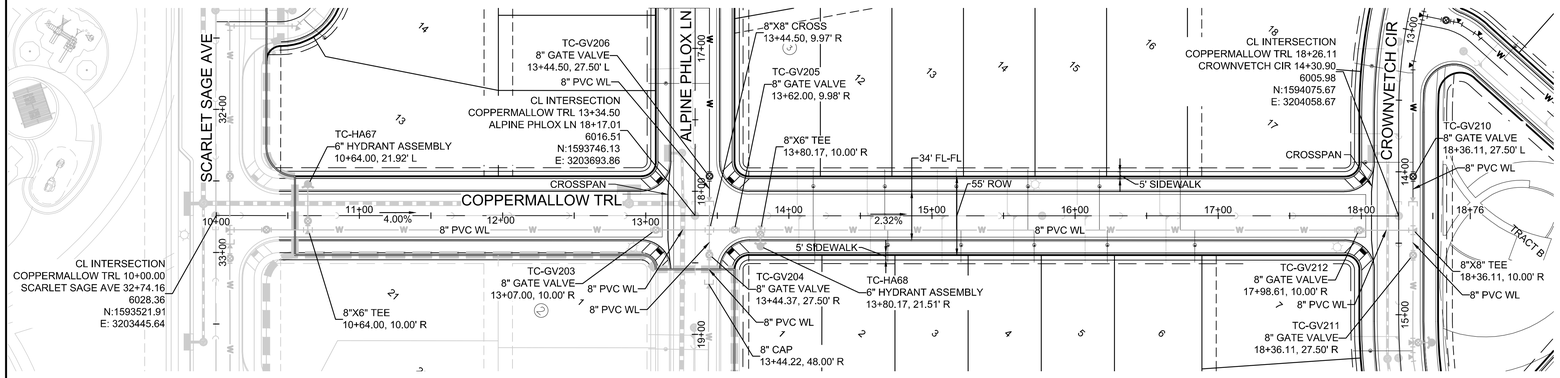

PLAN: COPPERMALLOW TRL STA: 9+50.00 TO 19+00.00
HORIZONTAL SCALE: 1" = 50'

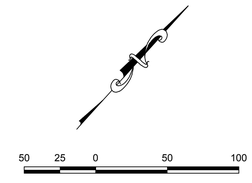

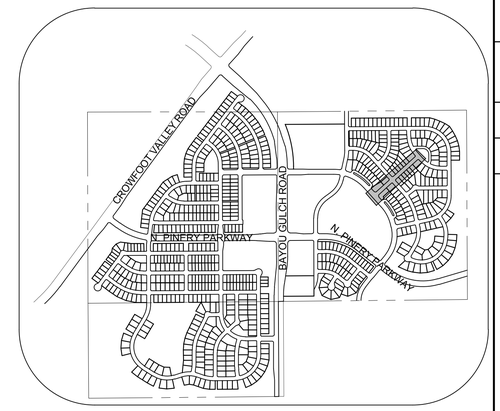

KEYMAP
N.T.S.

NOTE:
1. WATERLINE INSTALLED WITH FILING 1 WATER SERVICES TO BE INSTALLED WITH FILING 10

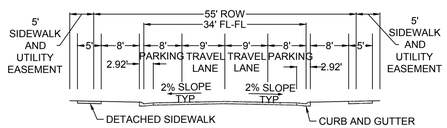

RESIDENTIAL LOCAL

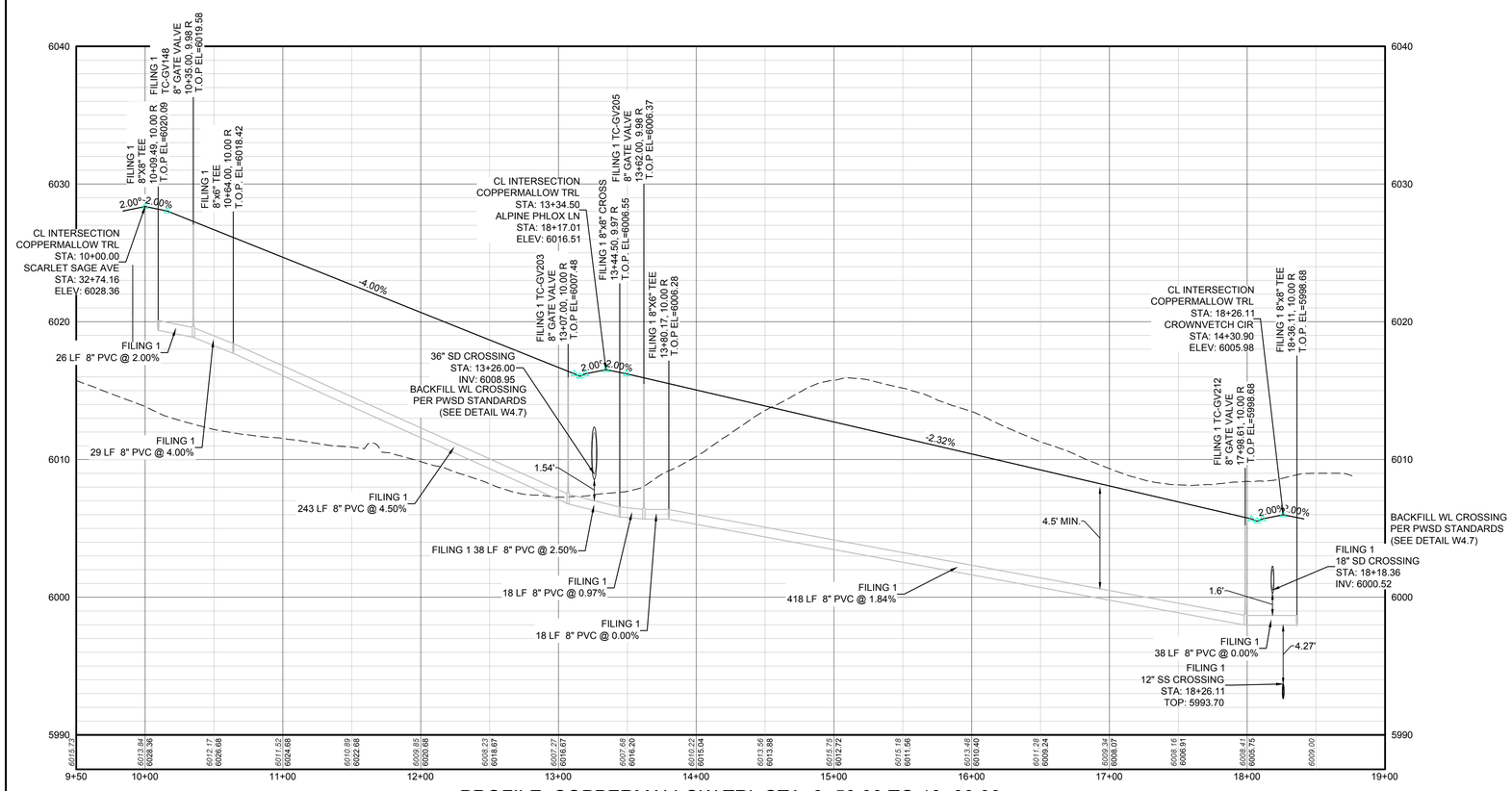

PROFILE: COPPERMALLOW TRL STA: 9+50.00 TO 19+00.00
HORIZONTAL: 1" = 50'
VERTICAL: 1" = 5'

LEGEND

BLOCK NUMBER	PROPOSED RANGE POINT
LOT TYPE	CENTERLINE
LOT NUMBER	RIGHT-OF-WAY
PROPOSED BUTTERFLY VALVE	PROPERTY LINE
PROPOSED CAP WITH END OF LINE BLOWOFF	EDGE OF PAVEMENT
PROPOSED REDUCER	PROPOSED DIRECTION OF FLOW
PROPOSED VALVE	PROPOSED SLOPE & DIRECTION
PROPOSED FIRE HYDRANT	EXISTING 5' CONTOUR
PROPOSED WL FITTING WITH THRUST BLOCK	EXISTING 1' CONTOUR
PROPOSED FLARED END SECTION	PROPOSED 5' CONTOUR
PROPOSED LOW POINT BLOW-OFF	PROPOSED 1' CONTOUR
PROPOSED AIR VALVE	PROPOSED STORM DRAIN
EXISTING BLOW OFF VALVE	PROPOSED SEWER LINE WITH MANHOLE
EXISTING VALVE	PROPOSED SEWER LATERAL
EXISTING FIRE HYDRANT	PROPOSED WATER LINE
PROPOSED LIGHT POLE	PROPOSED WATER LATERAL W/ METER
PROPOSED SIDEWALK	EXISTING 60" RAW WATER LINE
PROPOSED SIDEWALK RAMP	SECTION LINE
EXISTING ELEVATION	FILING BOUNDARY
PROPOSED DESIGN ELEVATION	EXISTING FIBER OPTIC LINE
PROPOSED STORM DRAIN INLET	EXISTING OVERHEAD HIGH VOLTAGE LINE
PROPOSED STORM DRAIN MANHOLE	EXISTING TELEPHONE LINE

ABBREVIATIONS

AD	ANGLE DIFFERENCE	N.T.S.	NOT TO SCALE
BVC	BEGIN VERTICAL CURVE	PL	PROPERTY LINE
BVP	BEGIN VERTICAL PROFILE	PVC	POLYVINYL CHLORIDE
CRR	CURB RETURN RADIUS	PVI	PT. OF VERTICAL INTERSECTION
EL	ELEVATION	PVT	POINT OF VERTICAL TANGENT
EP	EDGE OF PAVEMENT	RCBC	REINFORCED CONCRETE BOX CULVERT
EVC	END VERTICAL CURVE	RCP	REINFORCED CONCRETE PIPE
EVP	END VERTICAL PROFILE	ROW	RIGHT OF WAY
FG	FINISHED GROUND	SD	STORM DRAIN
FL	FLOW LINE	SL	SECTION LINE
GV	GATE VALVE	SS	SANITARY SEWER
HA	HYDRANT ASSEMBLY	STA	STATION
HCR	HANDICAP CURB RAMP	T.O.P.	TOP OF PIPE
HP	HIGH POINT	UE	UTILITY EASEMENT
INV	INVERT	VC	VERTICAL CURVE
K	CURVATURE COEFFICIENT	WL	WATER LINE
LF	LINEAR FEET	WSE	WATER SURFACE ELEVATION
MH	MANHOLE		

CALL 811
TWO WORKING DAYS
BEFORE YOU DIG
1-800-922-1987
UNCC UTILITY NOTIFICATION CENTER OF COLORADO

BENCHMARK
DOUGLAS COUNTY CONTROL POINT KNOWN AS 1.060032, BEING A 3-1/4" ALUMINUM CAP, BEING LOCATED IN THE SOUTHWEST QUARTER OF SECTION 33, TOWNSHIP 6 SOUTH, RANGE 66 WEST OF THE SIXTH PRINCIPAL MERIDIAN, HAVING A PUBLISHED ELEVATION OF 1799.2870 METERS (5903.13 FEET) NAVD '88 DATUM.

BASIS OF BEARINGS:
THE EAST LINE OF THE NORTHEAST QUARTER OF SAID SECTION 9 BEING MONUMENTED AT THE NORTHEAST CORNER OF SAID SECTION 9 BY A 3-1/4" ALUMINUM CAP STAMPED LS 23053 AND AT THE EAST QUARTER CORNER OF SAID SECTION 9 BY A 2-1/2" ALUMINUM CAP STAMPED LS 6935 BEING CONSIDERED TO BEAR SOUTH 00°15'06" EAST, 2648.70 FEET.

PREPARED UNDER THE SUPERVISION OF

BRIAN P. WILSON
COLORADO P.E. 0050067

No.	Revisions	Date	Init.	Appr.	Date

10333 E. Dry Creek Rd.
Suite 240
Englewood, CO 80112
Tel: (720) 482-9526
Fax: (720) 482-9546
CVL CONSULTANTS

E5X MANAGEMENT
7353 South Alton Way
CENTENNIAL, CO 80112

TRAILS AT CROWFOOT
FILING 10 CONSTRUCTION DRAWINGS
WATER PLAN & PROFILE
COPPERMALLOW TRAIL

SCALE: AS SHOWN
FILE NO: 8130283701
DRAWN BY: RHR
CHECKED BY: JJJ
DATE: SEPTEMBER 2017
SHEET NUMBER 16

N:\PROJECTS\HESS RANCH\CAD\ENGINEERING\SHEET SETS\CD'S\F10\PARKER WATER AND SANITATION\WATER PLAN AND PROFILE\COPPERMALLOW TRAIL.DWG, COOYA, 8/23/2017 3:39 PM

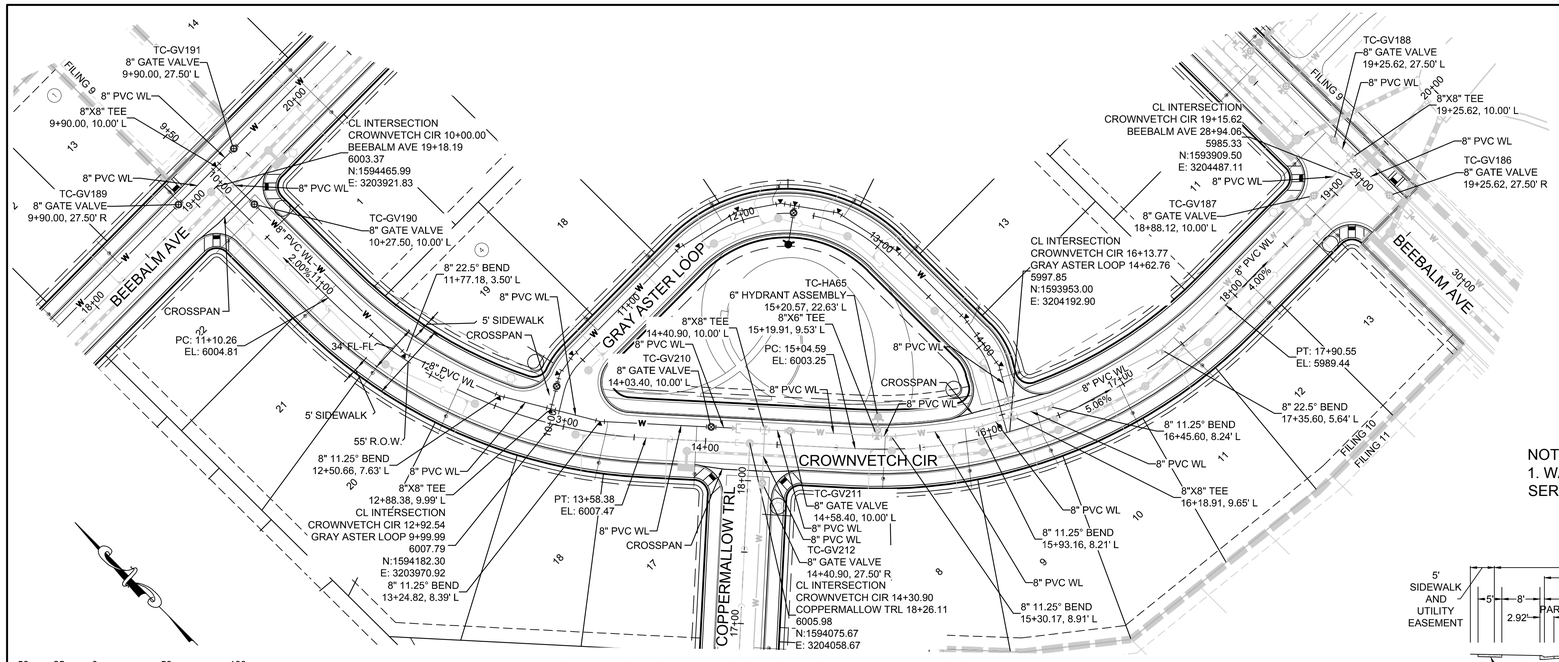

PLAN: CROWNVETCH CIR STA: 9+50.00 TO 19+50.00
HORIZONTAL SCALE: 1" = 50'

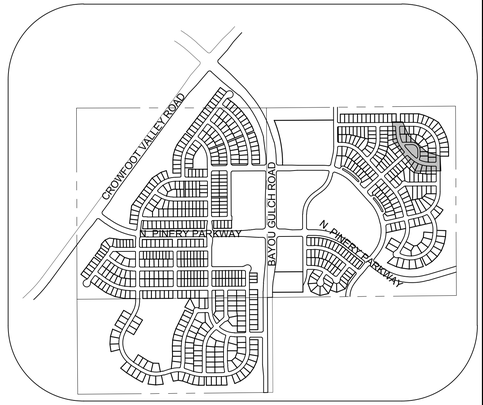

KEYMAP
N.T.S.

NOTE:
1. WATERLINE INSTALLED WITH FILING 1 WATER SERVICES TO BE INSTALLED WITH FILING 10

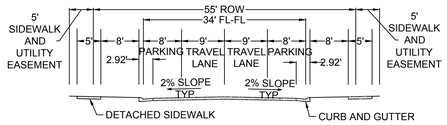

RESIDENTIAL LOCAL

LEGEND

2	BLOCK NUMBER		PROPOSED RANGE POINT
A	LOT TYPE		CENTERLINE
6	LOT NUMBER		RIGHT-OF-WAY
	PROPOSED BUTTERFLY VALVE		PROPERTY LINE
	PROPOSED CAP WITH END OF LINE BLOWOFF		EDGE OF PAVEMENT
	PROPOSED REDUCER		PROPOSED DIRECTION OF FLOW
	PROPOSED VALVE	1.0%	PROPOSED SLOPE & DIRECTION
	PROPOSED FIRE HYDRANT	5615	EXISTING 5' CONTOUR
	PROPOSED WL FITTING WITH THRUST BLOCK	5616	EXISTING 1' CONTOUR
	PROPOSED FLARED END SECTION	5620	PROPOSED 5' CONTOUR
BO	PROPOSED LOW POINT BLOW-OFF	5607	PROPOSED 1' CONTOUR
AV	PROPOSED AIR VALVE		PROPOSED STORM DRAIN
BO	EXISTING BLOW OFF VALVE		PROPOSED SEWER LINE WITH MANHOLE
	EXISTING VALVE		PROPOSED SEWER LATERAL
	EXISTING FIRE HYDRANT	8"W	PROPOSED WATER LINE
	PROPOSED LIGHT POLE		PROPOSED WATER LATERAL W/ METER
	PROPOSED SIDEWALK	RW	EXISTING 60" RAW WATER LINE
	PROPOSED SIDEWALK RAMP		SECTION LINE
10.00	EXISTING ELEVATION		FILING BOUNDARY
10.00	PROPOSED DESIGN ELEVATION	FO	EXISTING FIBER OPTIC LINE
	PROPOSED STORM DRAIN INLET	HV	EXISTING OVERHEAD HIGH VOLTAGE LINE
4 5 6	PROPOSED STORM DRAIN MANHOLE	TEL	EXISTING TELEPHONE LINE

ABBREVIATIONS

AD	ANGLE DIFFERENCE	N.T.S.	NOT TO SCALE
BVC	BEGIN VERTICAL CURVE	PL	PROPERTY LINE
BVP	BEGIN VERTICAL PROFILE	PVC	POLYVINYL CHLORIDE
CRR	CURB RETURN RADIUS	PVI	PT. OF VERTICAL INTERSECTION
EL	ELEVATION	PVT	POINT OF VERTICAL TANGENT
EP	EDGE OF PAVEMENT	RCBC	REINFORCED CONCRETE BOX CULVERT
EVC	END VERTICAL CURVE	RCP	REINFORCED CONCRETE PIPE
EVP	END VERTICAL PROFILE	ROW	RIGHT OF WAY
FG	FINISHED GROUND	SD	STORM DRAIN
FL	FLOW LINE	SL	SECTION LINE
GV	GATE VALVE	SS	SANITARY SEWER
HA	HYDRANT ASSEMBLY	STA	STATION
HCR	HANDICAP CURB RAMP	T.O.P.	TOP OF PIPE
HP	HIGH POINT	UE	UTILITY EASEMENT
INV	INVERT	VC	VERTICAL CURVE
K	CURVATURE COEFFICIENT	WL	WATER LINE
LF	LINEAR FEET	WSE	WATER SURFACE ELEVATION
MH	MANHOLE		

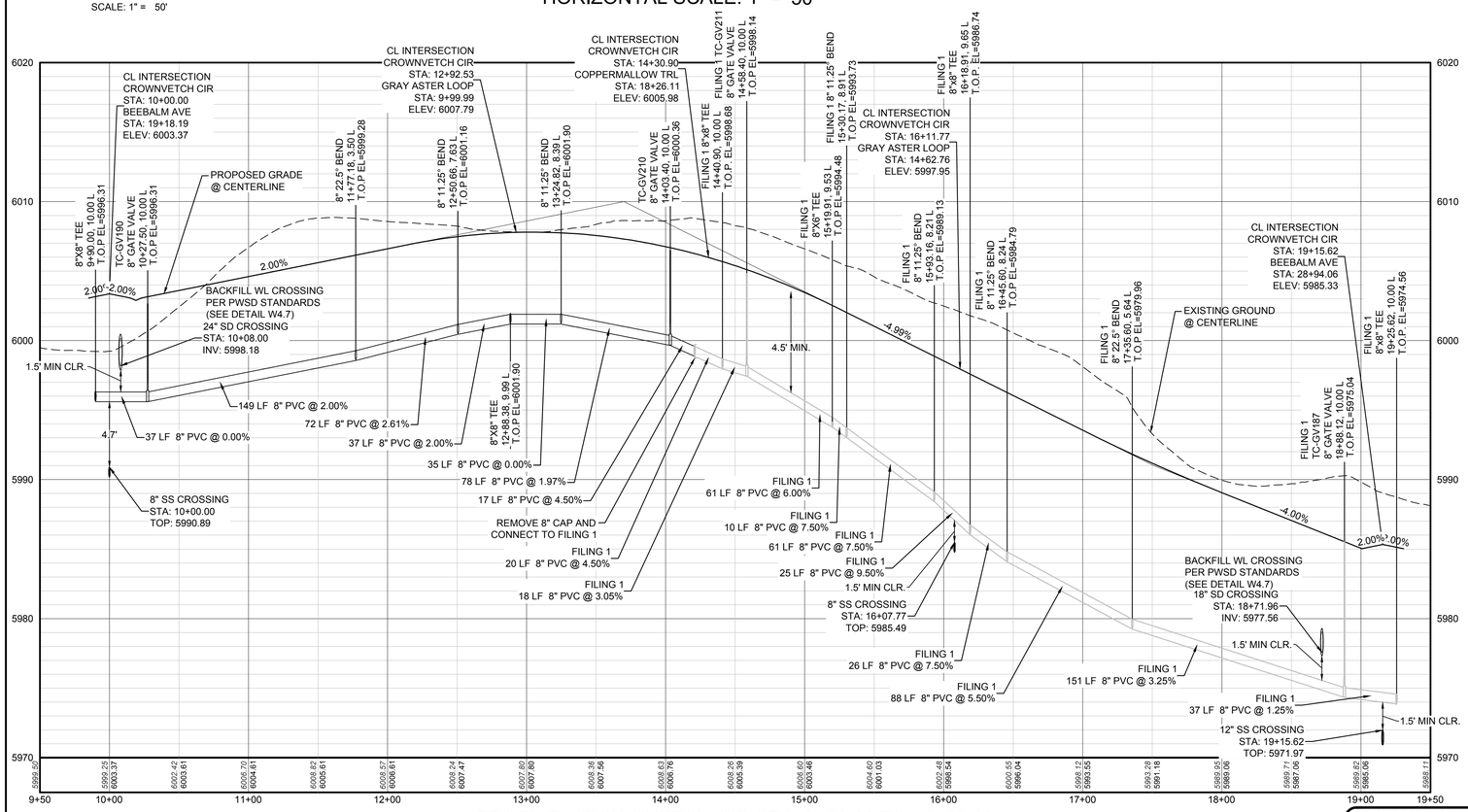

PROFILE: CROWNVETCH CIR STA: 9+50.00 TO 19+50.00
HORIZONTAL: 1" = 50'
VERTICAL: 1" = 5'

CALL 811
TWO WORKING DAYS
BEFORE YOU DIG
1-800-922-1987
UNCC UTILITY NOTIFICATION CENTER OF COLORADO

BENCHMARK
DOUGLAS COUNTY CONTROL POINT KNOWN AS 1.060032, BEING A 3-1/4" ALUMINUM CAP, BEING LOCATED IN THE SOUTHWEST QUARTER OF SECTION 33, TOWNSHIP 6 SOUTH, RANGE 66 WEST OF THE SIXTH PRINCIPAL MERIDIAN, HAVING A PUBLISHED ELEVATION OF 1799.2870 METERS (5903.13 FEET) NAVD '88 DATUM.

BASIS OF BEARINGS:
THE EAST LINE OF THE NORTHEAST QUARTER OF SAID SECTION 9 BEING MONUMENTED AT THE NORTHEAST CORNER OF SAID SECTION 9 BY A 3-1/4" ALUMINUM CAP STAMPED LS 23053 AND AT THE EAST QUARTER CORNER OF SAID SECTION 9 BY A 2-1/2" ALUMINUM CAP STAMPED LS 6935 BEING CONSIDERED TO BEAR SOUTH 00°15'06" EAST, 2648.70 FEET.

PREPARED UNDER THE SUPERVISION OF

BRIAN P. WILSON
COLORADO P.E. 0050067

No.	Revisions	Date	Init.	Appr.	Date

10333 E. Dry Creek Rd.
Suite 240
Englewood, CO 80112
Tel: (720) 482-9526
Fax: (720) 482-9546
CVL CONSULTANTS

ESX MANAGEMENT
7353 South Alton Way
CENTENNIAL, CO 80112

TRAILS AT CROWFOOT
FILING 10 CONSTRUCTION DRAWINGS
WATER PLAN & PROFILE
CROWNVETCH CIRCLE

SCALE: AS SHOWN
FILE NO: 8130283701
DRAWN BY: RHR
CHECKED BY: JJJ
DATE: SEPTEMBER 2017
SHEET NUMBER 17

N:\PROJECTS\HESS RANCH\CAD\ENGINEERING\SHEET SETS\CD'S\F10\PARKER WATER AND SANITATION\WATER PLAN AND PROFILE\CROWNVETCH CIRCLE.DWG, CODYA, 8/23/2017 3:44 PM

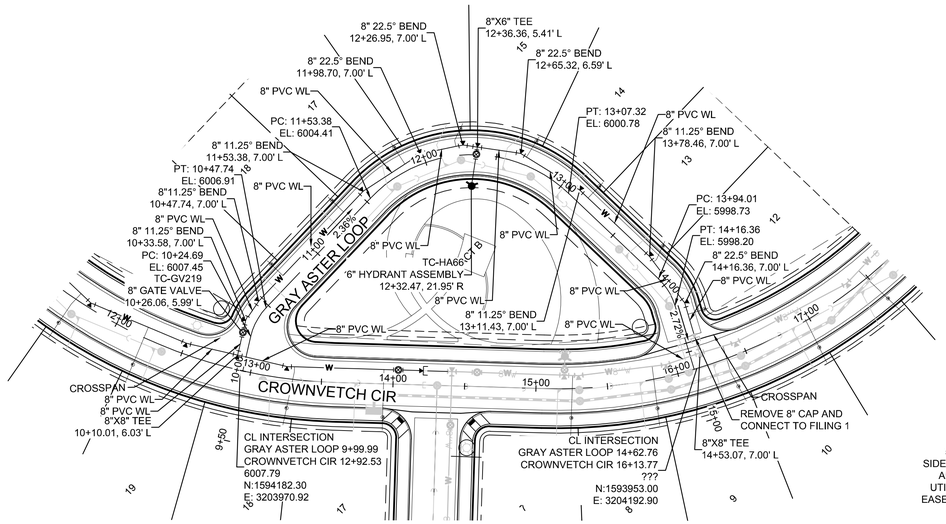

PLAN: GRAY ASTER LOOP STA: 9+50.00 TO 15+50.00
HORIZONTAL SCALE: 1" = 50'

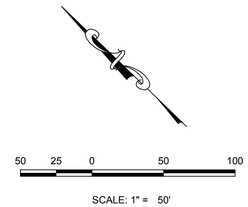

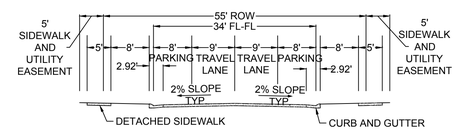

RESIDENTIAL LOCAL

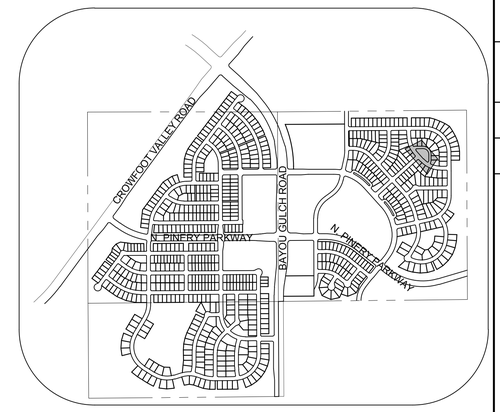

KEYMAP
N.T.S.

LEGEND

2	BLOCK NUMBER		PROPOSED RANGE POINT
A	LOT TYPE		CENTERLINE
6	LOT NUMBER		RIGHT-OF-WAY
	PROPOSED BUTTERFLY VALVE		PROPERTY LINE
	PROPOSED CAP WITH END OF LINE BLOWOFF		EDGE OF PAVEMENT
	PROPOSED REDUCER		PROPOSED DIRECTION OF FLOW
	PROPOSED VALVE	1.0%	PROPOSED SLOPE & DIRECTION
	PROPOSED FIRE HYDRANT	5615	EXISTING 5' CONTOUR
	PROPOSED WL FITTING WITH THRUST BLOCK	5616	EXISTING 1' CONTOUR
	PROPOSED FLARED END SECTION	5620	PROPOSED 5' CONTOUR
	PROPOSED LOW POINT BLOW-OFF	5607	PROPOSED 1' CONTOUR
	PROPOSED AIR VALVE		PROPOSED STORM DRAIN
	EXISTING BLOW OFF VALVE		PROPOSED SEWER LINE WITH MANHOLE
	EXISTING VALVE		PROPOSED SEWER LATERAL
	EXISTING FIRE HYDRANT	8"W	PROPOSED WATER LINE
	PROPOSED LIGHT POLE		PROPOSED WATER LATERAL W/ METER
	PROPOSED SIDEWALK	RW	EXISTING 60" RAW WATER LINE
	PROPOSED SIDEWALK RAMP		SECTION LINE
10.00	EXISTING ELEVATION		FILING BOUNDARY
10.00	PROPOSED DESIGN ELEVATION	FO	EXISTING FIBER OPTIC LINE
	PROPOSED STORM DRAIN INLET	HV	EXISTING OVERHEAD HIGH VOLTAGE LINE
	PROPOSED STORM DRAIN MANHOLE	TEL	EXISTING TELEPHONE LINE

ABBREVIATIONS

AD	ANGLE DIFFERENCE	N.T.S.	NOT TO SCALE
BVC	BEGIN VERTICAL CURVE	PL	PROPERTY LINE
BVP	BEGIN VERTICAL PROFILE	PVC	POLYVINYL CHLORIDE
CRR	CURB RETURN RADIUS	PVI	PT. OF VERTICAL INTERSECTION
EL	ELEVATION	PVT	POINT OF VERTICAL TANGENT
EP	EDGE OF PAVEMENT	RCBC	REINFORCED CONCRETE BOX CULVERT
EVC	END VERTICAL CURVE	RCP	REINFORCED CONCRETE PIPE
EVP	END VERTICAL PROFILE	ROW	RIGHT OF WAY
FG	FINISHED GROUND	SD	STORM DRAIN
FL	FLOW LINE	SL	SECTION LINE
GV	GATE VALVE	SS	SANITARY SEWER
HA	HYDRANT ASSEMBLY	STA	STATION
HCR	HANDICAP CURB RAMP	T.O.P.	TOP OF PIPE
HP	HIGH POINT	UE	UTILITY EASEMENT
INV	INVERT	VC	VERTICAL CURVE
K	CURVATURE COEFFICIENT	WL	WATER LINE
LF	LINEAR FEET	WSE	WATER SURFACE ELEVATION
MH	MANHOLE		

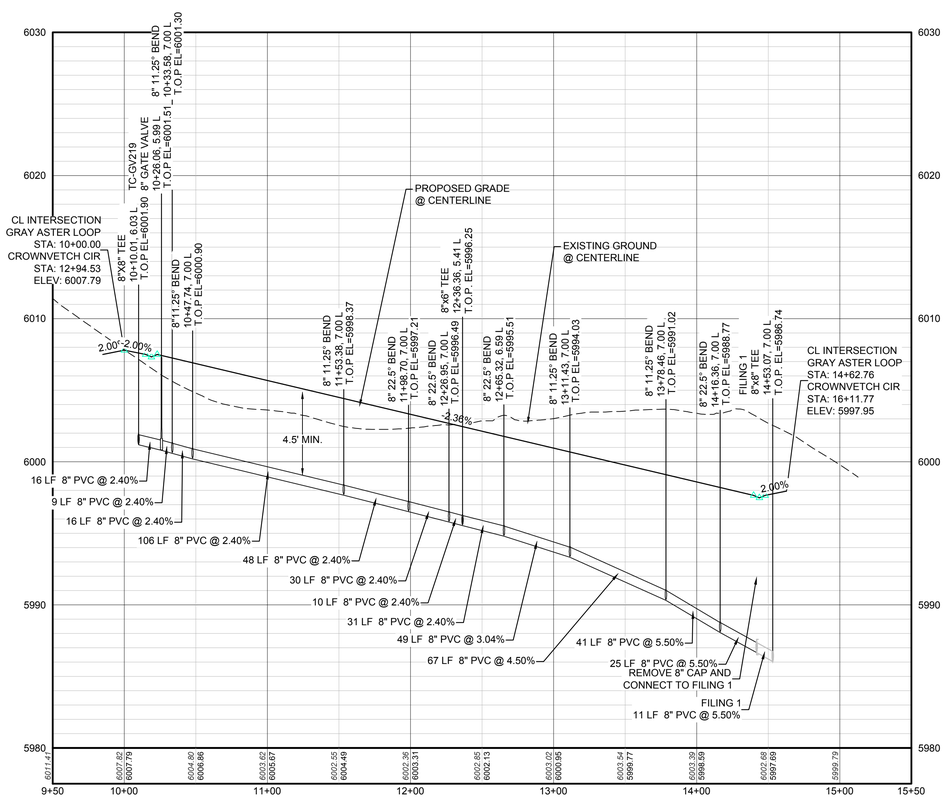

PROFILE: GRAY ASTER LOOP STA: 9+50.00 TO 15+50.00
HORIZONTAL: 1" = 50'
VERTICAL: 1" = 5'

CALL 811
TWO WORKING DAYS
BEFORE YOU DIG
1-800-922-1987
UNCC UTILITY NOTIFICATION CENTER OF COLORADO

BENCHMARK
DOUGLAS COUNTY CONTROL POINT KNOWN AS 1.060032, BEING A 3-1/4" ALUMINUM CAP, BEING LOCATED IN THE SOUTHWEST QUARTER OF SECTION 33, TOWNSHIP 6 SOUTH, RANGE 66 WEST OF THE SIXTH PRINCIPAL MERIDIAN, HAVING A PUBLISHED ELEVATION OF 1799.2870 METERS (5903.13 FEET) NAVD '88 DATUM.

BASIS OF BEARINGS:
THE EAST LINE OF THE NORTHEAST QUARTER OF SAID SECTION 9 BEING MONUMENTED AT THE NORTHEAST CORNER OF SAID SECTION 9 BY A 3-1/4" ALUMINUM CAP STAMPED LS 23053 AND AT THE EAST QUARTER CORNER OF SAID SECTION 9 BY A 2-1/2" ALUMINUM CAP STAMPED LS 6935 BEING CONSIDERED TO BEAR SOUTH 00°15'06" EAST, 2648.70 FEET.

PREPARED UNDER THE SUPERVISION OF

BRIAN P. WILSON
COLORADO P.E. 0050067

No.	Revisions	Date	Init.	Appr.	Date

CVL CONSULTANTS
10333 E. Dry Creek Rd.
Suite 240
Englewood, CO 80112
Tel: (720) 482-9526
Fax: (720) 482-9546

E5X MANAGEMENT
7353 South Alton Way
CENTENNIAL, CO 80112

TRAILS AT CROWFOOT
FILING 10 CONSTRUCTION DRAWINGS
WATER PLAN & PROFILE
GRAY ASTER LOOP

SCALE: AS SHOWN
FILE NO: 8130283701
DRAWN BY: RRR
CHECKED BY: JJJ
DATE: SEPTEMBER 2017
SHEET NUMBER 18

N:\PROJECTS\HESS RANCH\CAD\ENGINEERING\SHEET SETS\CD'S\F10\PARKER WATER AND SANITATION\WATER PLAN AND PROFILE\GRAY ASTER LOOP.DWG, LAURAC, 8/23/2017 3:51 PM

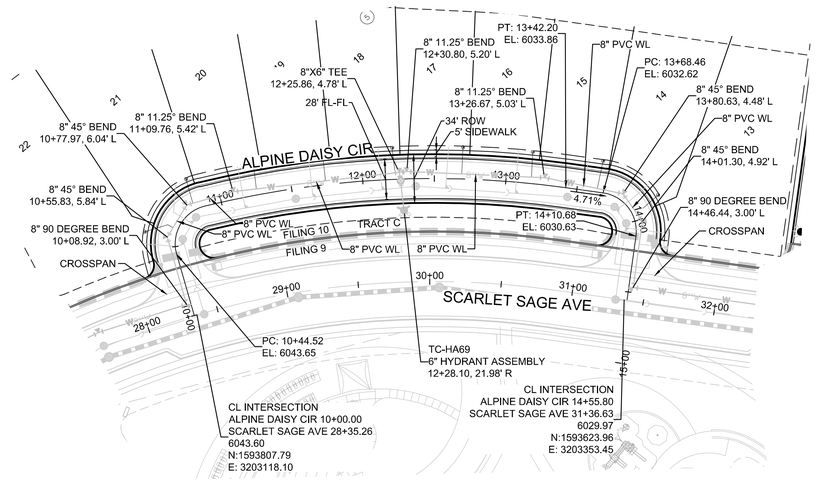

PLAN: ALPINE DAISY CIR STA: 9+50.00 TO 15+00.00
HORIZONTAL SCALE: 1" = 50'

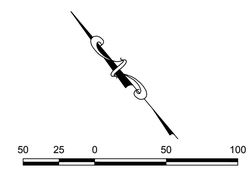

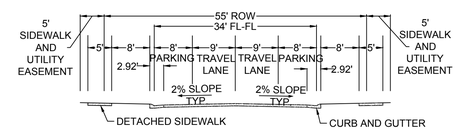

RESIDENTIAL LOCAL

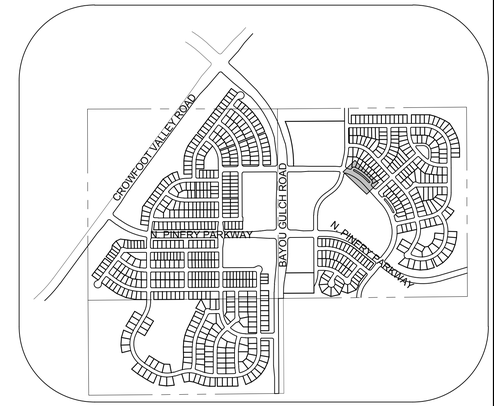

KEYMAP
N.T.S.

LEGEND

2	BLOCK NUMBER		PROPOSED RANGE POINT
A	LOT TYPE		CENTERLINE
6	LOT NUMBER		RIGHT-OF-WAY
	PROPOSED BUTTERFLY VALVE		PROPERTY LINE
	PROPOSED CAP WITH END OF LINE BLOWOFF		EDGE OF PAVEMENT
	PROPOSED REDUCER		PROPOSED DIRECTION OF FLOW
	PROPOSED VALVE	1.0%	PROPOSED SLOPE & DIRECTION
	PROPOSED FIRE HYDRANT	5615	EXISTING 5' CONTOUR
	PROPOSED WL FITTING WITH THRUST BLOCK	5616	EXISTING 1' CONTOUR
	PROPOSED FLARED END SECTION	5620	PROPOSED 5' CONTOUR
BO	PROPOSED LOW POINT BLOW-OFF	5607	PROPOSED 1' CONTOUR
AV	PROPOSED AIR VALVE		PROPOSED STORM DRAIN
BO	EXISTING BLOW OFF VALVE		PROPOSED SEWER LINE WITH MANHOLE
	EXISTING VALVE		PROPOSED SEWER LATERAL
	EXISTING FIRE HYDRANT	8"W	PROPOSED WATER LINE
	PROPOSED LIGHT POLE		PROPOSED WATER LATERAL W/ METER
	PROPOSED SIDEWALK	RW	EXISTING 60" RAW WATER LINE
	PROPOSED SIDEWALK RAMP		SECTION LINE
10.00	EXISTING ELEVATION		FILING BOUNDARY
10.00	PROPOSED DESIGN ELEVATION	FO	EXISTING FIBER OPTIC LINE
	PROPOSED STORM DRAIN INLET	HV	EXISTING OVERHEAD HIGH VOLTAGE LINE
4 5 6	PROPOSED STORM DRAIN MANHOLE	TEL	EXISTING TELEPHONE LINE

ABBREVIATIONS

AD	ANGLE DIFFERENCE	N.T.S.	NOT TO SCALE
BVC	BEGIN VERTICAL CURVE	PL	PROPERTY LINE
BVP	BEGIN VERTICAL PROFILE	PVC	POLYVINYL CHLORIDE
CRR	CURB RETURN RADIUS	PVI	PT. OF VERTICAL INTERSECTION
EL	ELEVATION	PVT	POINT OF VERTICAL TANGENT
EP	EDGE OF PAVEMENT	RCBC	REINFORCED CONCRETE BOX CULVERT
EVC	END VERTICAL CURVE	RCP	REINFORCED CONCRETE PIPE
EVP	END VERTICAL PROFILE	ROW	RIGHT OF WAY
FG	FINISHED GROUND	SD	STORM DRAIN
FL	FLOW LINE	SL	SECTION LINE
GV	GATE VALVE	SS	SANITARY SEWER
HA	HYDRANT ASSEMBLY	STA	STATION
HCR	HANDICAP CURB RAMP	T.O.P.	TOP OF PIPE
HP	HIGH POINT	UE	UTILITY EASEMENT
INV	INVERT	VC	VERTICAL CURVE
K	CURVATURE COEFFICIENT	WL	WATER LINE
LF	LINEAR FEET	WSE	WATER SURFACE ELEVATION
MH	MANHOLE		

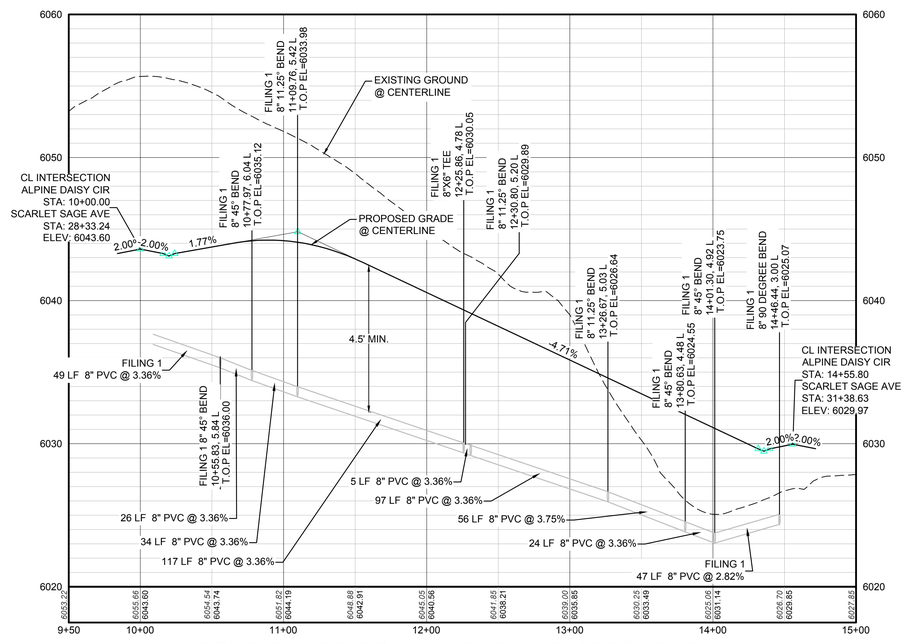

PROFILE: ALPINE DAISY CIR STA: 9+50.00 TO 15+00.00
HORIZONTAL: 1" = 50'
VERTICAL: 1" = 5'

CALL 811
TWO WORKING DAYS
BEFORE YOU DIG
1-800-922-1987
UNCC UTILITY NOTIFICATION CENTER OF COLORADO

BENCHMARK
DOUGLAS COUNTY CONTROL POINT KNOWN AS 1.060032, BEING A 3-1/4" ALUMINUM CAP, BEING LOCATED IN THE SOUTHWEST QUARTER OF SECTION 33, TOWNSHIP 6 SOUTH, RANGE 66 WEST OF THE SIXTH PRINCIPAL MERIDIAN, HAVING A PUBLISHED ELEVATION OF 1799.2870 METERS (5903.13 FEET) NAVD '88 DATUM.

BASIS OF BEARINGS:
THE EAST LINE OF THE NORTHEAST QUARTER OF SAID SECTION 9 BEING MONUMENTED AT THE NORTHEAST CORNER OF SAID SECTION 9 BY A 3-1/4" ALUMINUM CAP STAMPED LS 23053 AND AT THE EAST QUARTER CORNER OF SAID SECTION 9 BY A 2-1/2" ALUMINUM CAP STAMPED LS 6935 BEING CONSIDERED TO BEAR SOUTH 00°15'06" EAST, 2648.70 FEET.

PREPARED UNDER THE SUPERVISION OF

BRIAN P. WILSON
COLORADO P.E. 0050067

No.	Revisions	Date	Init.	Appr.	Date

10333 E. Dry Creek Rd.
Suite 240
Englewood, CO 80112
Tel: (720) 482-9526
Fax: (720) 482-9546
CVL CONSULTANTS

E5X MANAGEMENT
7353 South Alton Way
CENTENNIAL, CO 80112

TRAILS AT CROWFOOT
FILING 10 CONSTRUCTION DRAWINGS
WATER PLAN & PROFILE
ALPINE DAISY CIRCLE

SCALE: AS SHOWN
FILE NO: 8130283701
DRAWN BY: RHR
CHECKED BY: JJJ
DATE: SEPTEMBER 2017
SHEET NUMBER 19

N:\PROJECTS\HESS RANCH\CAD\ENGINEERING\SHEET SETS\CD'S\F10\PARKER WATER AND SANITATION\WATER PLAN AND PROFILE\SCARLET SAGE AVENUE AA DWG, CODYA, 8/23/2017 3:51 PM

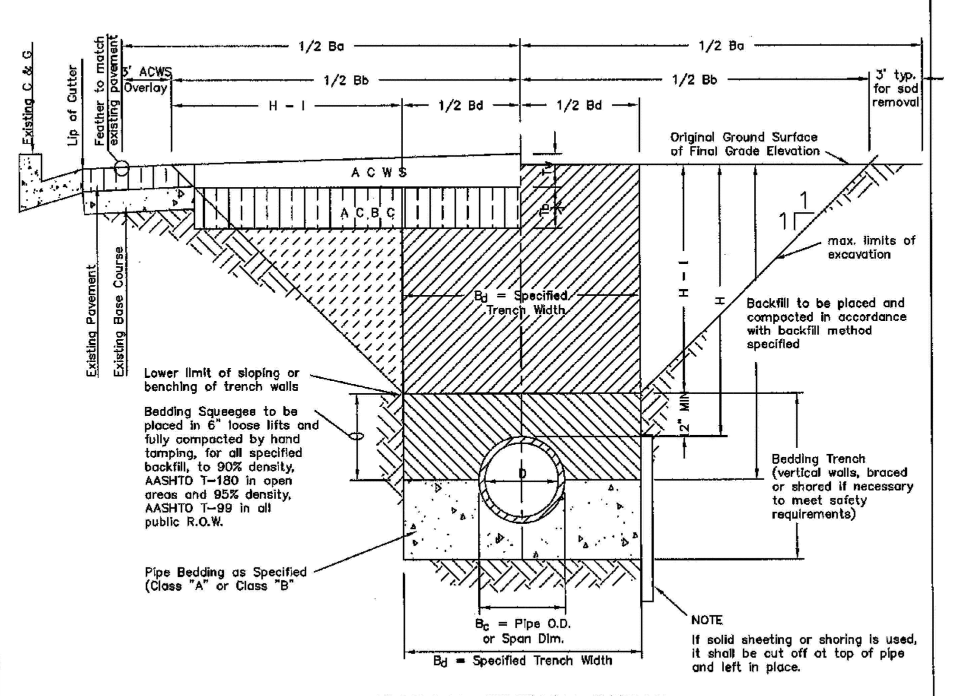

TYPICAL TRENCH DETAIL

T_b = Thickness of Asphaltic Concrete Base Course (A C B C)

T_w = Thickness of Asphaltic Concrete Wearing Surface (A C W S)

T_o = Total Asphalt Thickness (T_b + T_w)

B_c = Outside Pipe or Conduit Span Dimension

B_d = Specified Bedding Trench Width and Max Bedding Trench Width at a point 12" above Top of Pipe (See Note 2)

B_b = Max. Pay Width of Asphaltic Concrete Base Course (or Asphaltic Concrete Cold Mix) (See Note 3)

B_a = Max. Pay Width of Asphaltic Concrete Wearing Surface or Sod Replacement (See Note 3)

H = Depth of Surface to Top of Pipe

H-I= Depth from Surface to 1 ft. above Top of Pipe

NOTES

1. *Sloping or benching of trench side walls, where permitted shall be in accordance with applicable Federal, State and Local safety regulations.*
2. *Trench shall be braced and shored as necessary to afford safe working conditions or to protect adjacent utilities, structures, etc.. Unless otherwise specified on the plans, no pavement will be made for removal, replacement or relocation of curb and gutter, utilities, sidewalk, structures, etc. outside the maximum limits of excavation as shown and the contractor shall be responsible for protection of same.*
3. *If dimension "B_a" is ≤ 5', then existing asphalt pavement shall be removed and replaced up to the gutter. Maximum asphalt pay widths, B_a & B_b shall then be based upon this actual width.*

TABLE II
ASPHALT AND BASE COURSE REPLACEMENT SCHEDULE

STREET WIDTH	ASPHALTIC BASE COURSE (T_b)	ASPHALTIC WEARING SURFACE (T_w)	TOTAL THICKNESS (T_o)
UP TO 36'	4"	2"	6"
36' TO 44'	4"	3"	7"
44' TO 48'	5"	3"	8"
WIDER THAN 48'	6"	3"	9"

PARKER WATER
& SANITATION DISTRICT

SEWER TRENCHING AND BEDDING DETAIL

SCALE: NONE | DATE: 2/96
APPROVED: JFN | 5/98
DISTRICT ENGINEER

2008 REVISION — SHEET 1

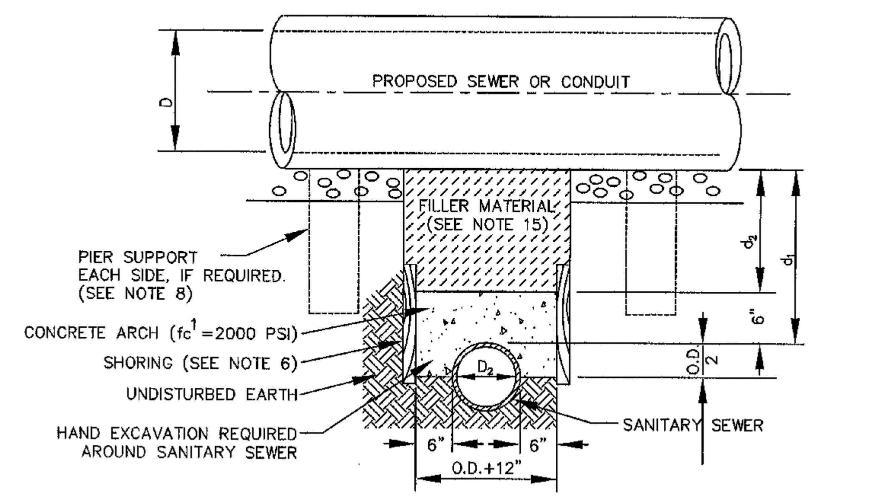

TYPE I
CONCRETE ENCASEMENT FOR SANITARY SEWERS

(CONCRETE ARCH)

GENERAL NOTES FOR TYPE I,II& III ENCASEMENT

1. CONCRETE TO BE CAST AGAINST UNDISTURBED SOIL OR SHORING. IF OPTIONAL CONSTRUCTION JOINT IS USED & BOTTOM HALF OF ENCASEMENT IS POURED SEPARATELY, A ONE INCH LAYER OF SAND OR MORTAR SHALL BE PLACED BETWEEN BOTTOM OF SANITARY SEWER AND TOP OF CONCRETE.
2. LENGTH OF ENCASEMENT FOR:
   (a) TYPE I & TYPE III ENCASEMENT SHALL EXTEND FULL TRENCH WIDTH EXCAVATED FOR PROPOSED SEWER OR CONDUIT.
   (b) TYPE II ENCASEMENT SHALL EXTEND AT LEAST 10 FEET EACH SIDE OF WATER MAIN.
3. UNLESS OTHERWISE NOTED ON PLAN/PROFILE DRAWINGS, TYPE I, II & III ENCASEMENTS NEED NOT BE REINFORCED. REINFORCEMENT, IF REQUIRED, SHALL BE SPECIFIED AND DETAILED SEPARATELY ON PLAN & PROFILE DRAWINGS.
4. TYPE I, II OR III ENCASEMENTS ARE REQUIRED UNDER FOLLOWING CONDITIONS:
   (a) TYPE I OR TYPE III IF d ≮ 18" (d ≤ 12") EXCEPT FOR SANITARY SEWER CROSSING OVER OR UNDER WATER MAINS.
   WATER MAINS AND d_3 ≤ 24" (d_4 ≤ 18")
   (c) TYPE IIb IS REQUIRED FOR SANITARY SEWERS CROSSING OVER TOP OF WATER MAINS, REGARDLESS OF DIMENSION "d_3".
   (d) EXCEPT FOR UNUSUAL CIRCUMSTANCES, WATER MAIN CROSSINGS, OR WHERE UNSTABLE SOIL CONDITIONS ARE ENCOUNTERED, TYPE I ENCASEMENT WILL NORMALLY BE SATISFACTORY.
   (e) IF THE SANITARY SEWER IS REPLACED OR CONSTRUCTED OF DUCTILE IRON PIPE (AWWA C-150 OR C-151), CONCRETE ENCASEMENT MAY NOT BE REQUIRED.
5. FILLER MATERIAL BETWEEN CONDUITS TO BE:
   (a) APPROVED COMPRESSIBLE MATERIAL SUCH AS STYROFOAM, ETC IF d_2 & d_4 ≤ 6".
   (b) COMPACTED CLASS "B" BEDDING IF d_2 & d_4 > 6" (IF d_4 > 6" FOR TYPE IIb ENCASEMENT POUR CONCRETE ON UNDISTURBED SOIL)
6. SHORING OR SHEETING, IF USED, TO BE CUT OFF AT TOP OF ENCASEMENT.
7. THESE ENCASEMENT DETAILS MAY ALSO BE APPLICABLE FOR CONDUITS OTHER THAN STORM OR SANITARY SEWER INSTALLATIONS.
8. IN CERTAIN SITUATIONS WHERE CONDUIT DIAMETER "D" IS EXTREMELY LARGE, PIER SUPPORTS ON EACH SIDE OF SANITARY SEWER MAY ALSO BE REQUIRED. IF REQUIRED, SUPPORTS SHALL BE SPECIFIED AND DETAILED SEPARATELY ON PLAN AND PROFILE DRAWINGS.

PARKER WATER
& SANITATION DISTRICT

CONCRETE ENCASEMENT TYPE I

SCALE: NONE | DATE: 2/96
APPROVED: JFN
DISTRICT ENGINEER

2008 REVISION — SHEET 6

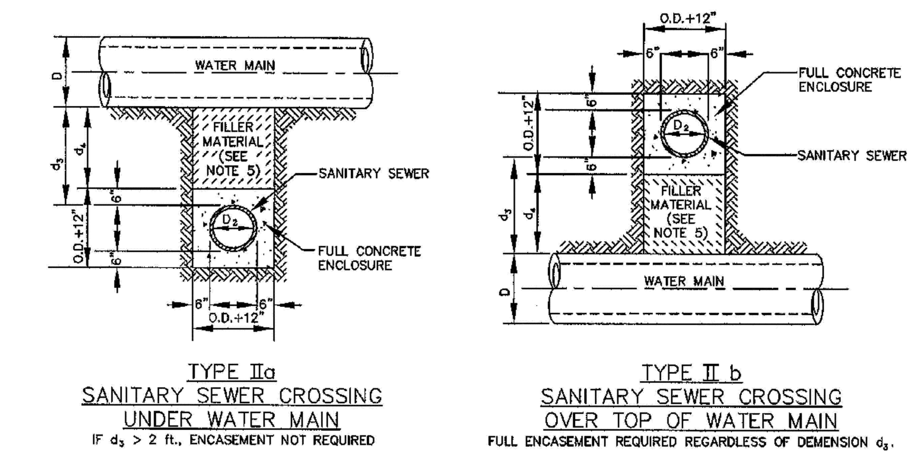

TYPE IIa
SANITARY SEWER CROSSING UNDER WATER MAIN
IF d_3 > 2 ft., ENCASEMENT NOT REQUIRED

TYPE II b
SANITARY SEWER CROSSING OVER TOP OF WATER MAIN
FULL ENCASEMENT REQUIRED REGARDLESS OF DEMENSION d_3.

TYPE II
CONCRETE ENCASEMENT FOR SANITARY SEWERS CROSSING OVER OR UNDER WATER MAIN

GENERAL NOTES FOR TYPE I,II& III ENCASEMENT

1. CONCRETE TO BE CAST AGAINST UNDISTURBED SOIL OR SHORING. IF OPTIONAL CONSTRUCTION JOINT IS USED & BOTTOM HALF OF ENCASEMENT IS POURED SEPARATELY, A ONE INCH LAYER OF SAND OR MORTAR SHALL BE PLACED BETWEEN BOTTOM OF SANITARY SEWER AND TOP OF CONCRETE.
2. LENGTH OF ENCASEMENT FOR:
   (a) TYPE I & TYPE III ENCASEMENT SHALL EXTEND FULL TRENCH WIDTH EXCAVATED FOR PROPOSED SEWER OR CONDUIT.
   (b) TYPE II ENCASEMENT SHALL EXTEND AT LEAST 10 FEET EACH SIDE OF WATER MAIN.
3. UNLESS OTHERWISE NOTED ON PLAN/PROFILE DRAWINGS, TYPE I, II & III ENCASEMENTS NEED NOT BE REINFORCED. REINFORCEMENT, IF REQUIRED, SHALL BE SPECIFIED AND DETAILED SEPARATELY ON PLAN & PROFILE DRAWINGS.
4. TYPE I, II OR III ENCASEMENTS ARE REQUIRED UNDER FOLLOWING CONDITIONS:
   (a) TYPE I OR TYPE III IF d ≮ 18" (d ≤ 12") EXCEPT FOR SANITARY SEWER CROSSING OVER OR UNDER WATER MAINS.
   WATER MAINS AND d_3 ≤ 24" (d_4 ≤ 18")
   (c) TYPE IIb IS REQUIRED FOR SANITARY SEWERS CROSSING OVER TOP OF WATER MAINS, REGARDLESS OF DIMENSION "d_3".
   (d) EXCEPT FOR UNUSUAL CIRCUMSTANCES, WATER MAIN CROSSINGS, OR WHERE UNSTABLE SOIL CONDITIONS ARE ENCOUNTERED, TYPE I ENCASEMENT WILL NORMALLY BE SATISFACTORY.
   (e) IF THE SANITARY SEWER IS REPLACED OR CONSTRUCTED OF DUCTILE IRON PIPE (AWWA C-150 OR C-151), CONCRETE ENCASEMENT MAY NOT BE REQUIRED.
5. FILLER MATERIAL BETWEEN CONDUITS TO BE:
   (a) APPROVED COMPRESSIBLE MATERIAL SUCH AS STYROFOAM, ETC IF d_2 & d_4 ≤ 6".
   (b) COMPACTED CLASS "B" BEDDING IF d_2 & d_4 > 6" (IF d_4 > 6" FOR TYPE IIb ENCASEMENT POUR CONCRETE ON UNDISTURBED SOIL)
6. SHORING OR SHEETING, IF USED, TO BE CUT OFF AT TOP OF ENCASEMENT.
7. THESE ENCASEMENT DETAILS MAY ALSO BE APPLICABLE FOR CONDUITS OTHER THAN STORM OR SANITARY SEWER INSTALLATIONS.
8. IN CERTAIN SITUATIONS WHERE CONDUIT DIAMETER "D" IS EXTREMELY LARGE, PIER SUPPORTS ON EACH SIDE OF SANITARY SEWER MAY ALSO BE REQUIRED. IF REQUIRED, SUPPORTS SHALL BE SPECIFIED AND DETAILED SEPARATELY ON PLAN AND PROFILE DRAWINGS.

PARKER WATER
& SANITATION DISTRICT

CONCRETE ENCASEMENT TYPE II

SCALE: NONE | DATE: 2/96
APPROVED: JFN | 5/98 4/01 1/08
DISTRICT ENGINEER

2008 REVISION — SHEET 7

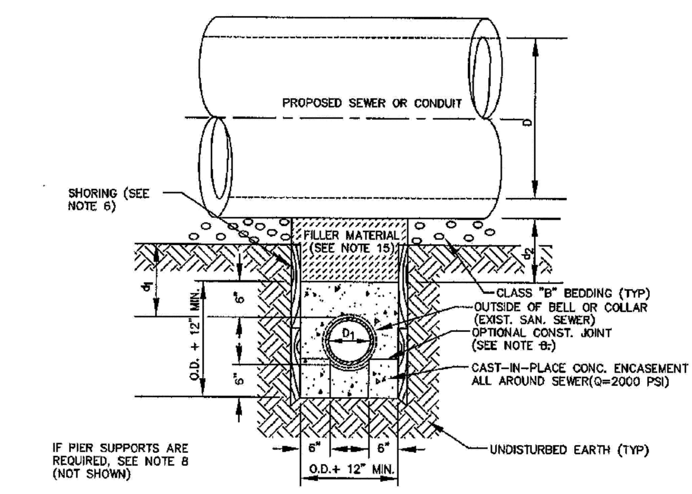

TYPE III
CONCRETE ENCASEMENT FOR SANITARY SEWERS

(FULL ENCASEMENT) NO SCALE

GENERAL NOTES FOR TYPE I,II& III ENCASEMENT

1. CONCRETE TO BE CAST AGAINST UNDISTURBED SOIL OR SHORING. IF OPTIONAL CONSTRUCTION JOINT IS USED & BOTTOM HALF OF ENCASEMENT IS POURED SEPARATELY, A ONE INCH LAYER OF SAND OR MORTAR SHALL BE PLACED BETWEEN BOTTOM OF SANITARY SEWER AND TOP OF CONCRETE.
2. LENGTH OF ENCASEMENT FOR:
   (a) TYPE I & TYPE III ENCASEMENT SHALL EXTEND FULL TRENCH WIDTH EXCAVATED FOR PROPOSED SEWER OR CONDUIT.
   (b) TYPE II ENCASEMENT SHALL EXTEND AT LEAST 10 FEET EACH SIDE OF WATER MAIN.
3. UNLESS OTHERWISE NOTED ON PLAN/PROFILE DRAWINGS, TYPE I,II & III ENCASEMENTS NEED NOT BE REINFORCED. REINFORCEMENT, IF REQUIRED, TO BE SPECIFIED AND DETAILED SEPARATELY ON PLAN & PROFILE DRAWINGS.
4. TYPE I, II OR III ENCASEMENTS REQUIRED UNDER FOLLOWING CONDITIONS:
   (a) TYPE I OR TYPE III IF d_1 ≤ 18"(d_2 ≤ 12") EXCEPT FOR SANITARY SEWERS CROSSING OVER OR UNDER WATER MAINS.
   (b) TYPE IIa REQUIRED FOR SANITARY SEWERS CROSSING UNDER WATER MAINS AND d_3 ≤ 24"(d_4 ≤ 18")
   (c) TYPE IIb REQUIRED FOR SANITARY SEWERS CROSSING OVER TOP OF WATER MAINS, REGARDLESS OF DIMENSION "d_3".
   (d) EXCEPT FOR UNUSUAL CIRCUMSTANCES, WATER MAIN CROSSINGS, OR WHERE UNSTABLE SOIL CONDITIONS ARE ENCOUNTERED, TYPE I ENCASEMENT WILL NORMALLY BE SATISFACTORY.
   (e) IF THE SANITARY SEWER IS REPLACED OR CONSTRUCTED OF DUCTILE IRON PIPE (AWWA C-150 OR C-151), CONCRETE ENCASEMENT MAY NOT BE REQUIRED.
5. FILLER MATERIAL BETWEEN CONDUITS TO BE:
   (a) APPROVED COMPRESSIBLE MATERIAL SUCH AS STYROFOAM, ETC., IF d_2& d_4 ≤ 6".
   (b) COMPACTED CLASS "B" BEDDING IF d_2& d_4 > 6". (IF d_4> 6" FOR TYPE IIb ENCASEMENT POUR CONCRETE ON UNDISTURBED SOIL)
6. SHORING OR SHEETING, IF USED, TO BE CUT OFF AT TOP OF ENCASEMENT.
7. THESE ENCASEMENT DETAILS MAY ALSO BE APPLICABLE FOR CONDUITS OTHER THAN STORM OR SANITARY SEWER INSTALLATIONS.
8. IN CERTAIN SITUATIONS WHERE CONDUIT DIAMETER "D" IS EXTREMELY LARGE, PIER SUPPORTS EACH SIDE OF SANITARY SEWER MAY ALSO BE REQUIRED. IF REQUIRED, SUPPORTS TO BE SPECIFIED AND DETAILED SEPARATELY ON PLAN AND PROFILE DRAWINGS.

PARKER WATER
& SANITATION DISTRICT

CONCRETE ENCASEMENT TYPE III

SCALE: NONE | DATE: 2/96
APPROVED: JFN | 5/98
DISTRICT ENGINEER

2008 REVISION — SHEET 8

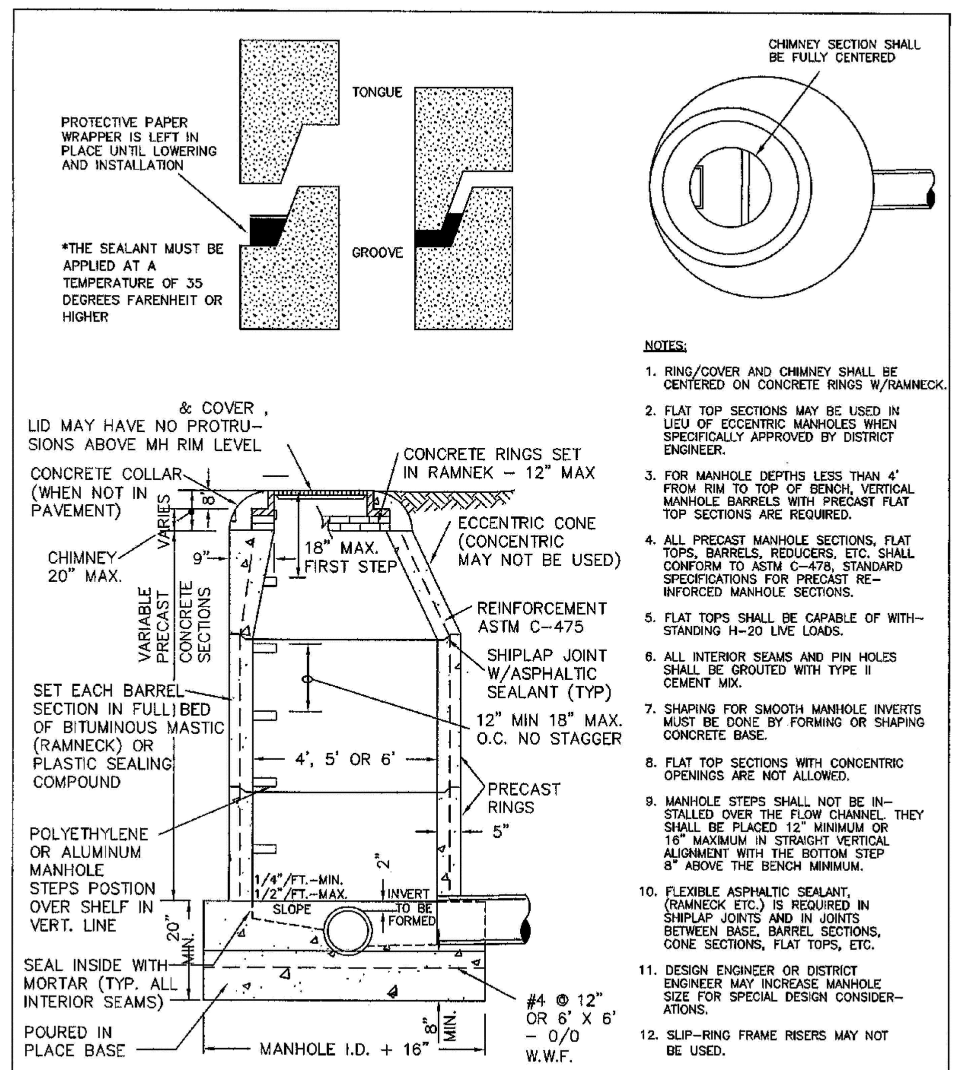

NOTES:

1. RING/COVER AND CHIMNEY SHALL BE CENTERED ON CONCRETE RINGS W/RAMNECK.
2. FLAT TOP SECTIONS MAY BE USED IN LIEU OF ECCENTRIC MANHOLES WHEN SPECIFICALLY APPROVED BY DISTRICT ENGINEER.
3. FOR MANHOLE DEPTHS LESS THAN 4' FROM RIM TO TOP OF BENCH, VERTICAL MANHOLE BARRELS WITH PRECAST FLAT TOP SECTIONS ARE REQUIRED.
4. ALL PRECAST MANHOLE SECTIONS, FLAT TOPS, BARRELS, REDUCERS, ETC. SHALL CONFORM TO ASTM C-478, STANDARD SPECIFICATIONS FOR PRECAST REINFORCED MANHOLE SECTIONS.
5. FLAT TOPS SHALL BE CAPABLE OF WITHSTANDING H-20 LIVE LOADS.
6. ALL INTERIOR SEAMS AND PIN HOLES SHALL BE GROUTED WITH TYPE II CEMENT MIX.
7. SHAPING FOR SMOOTH MANHOLE INVERTS MUST BE DONE BY FORMING OR SHAPING CONCRETE BASE.
8. FLAT TOP SECTIONS WITH CONCENTRIC OPENINGS ARE NOT ALLOWED.
9. MANHOLE STEPS SHALL NOT BE INSTALLED OVER THE FLOW CHANNEL. THEY SHALL BE PLACED 12" MINIMUM OR 16" MAXIMUM IN STRAIGHT VERTICAL ALIGNMENT WITH THE BOTTOM STEP 8" ABOVE THE BENCH MINIMUM.
10. FLEXIBLE ASPHALTIC SEALANT, (RAMNECK ETC.) IS REQUIRED IN SHIPLAP JOINTS AND IN JOINTS BETWEEN BASE, BARREL SECTIONS, CONE SECTIONS, FLAT TOPS, ETC.
11. DESIGN ENGINEER OR DISTRICT ENGINEER MAY INCREASE MANHOLE SIZE FOR SPECIAL DESIGN CONSIDERATIONS.
12. SLIP-RING FRAME RISERS MAY NOT BE USED.

PIPE I.D.	MANHOLE I.D.
18" & SMALLER	4'-0"
21" TO 48"	5'-0"
54"	6'-0"
60" & LARGER	SPECIAL DESIGN

PARKER WATER
& SANITATION DISTRICT

PARKER MANHOLE ECCENTRIC CONE

SCALE: NONE | DATE: 2/96
APPROVED: JFN | 4/01 01/02 1/08
DISTRICT ENGINEER

2008 REVISION — SHEET 9

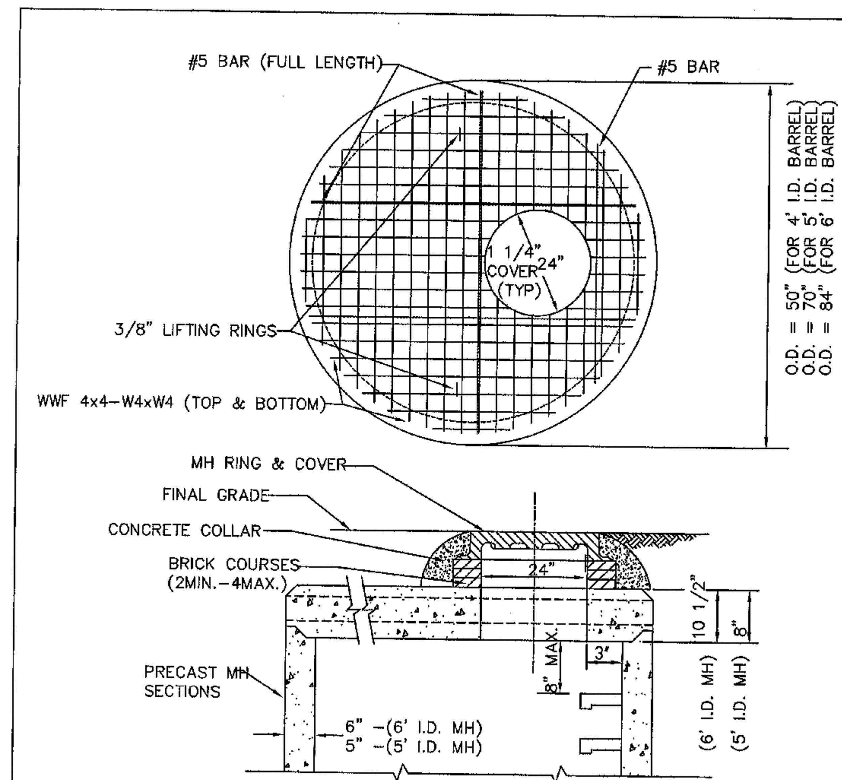

FLAT TOP SECTION w/ECCENTRIC OPENING
5' & 6' I.D. MANHOLES

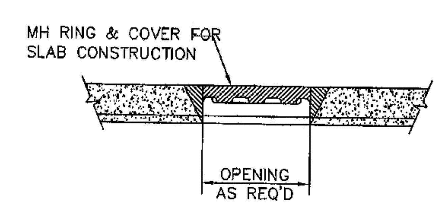

SECTION
(NON-ADJUSTABLE RING & COVER TO BE CAST IN FLAT TOP)

ALTERNATE RING & COVER
(TO BE USED ONLY WHEN SPECIFICALLY AUTHORIZED.)

PARKER WATER
& SANITATION DISTRICT

PRECAST MANHOLE – 5' & 6' I.D. WITH ECCENTRIC CONE

SCALE: NONE | DATE: 2/96
APPROVED: JFN | 01/02
DISTRICT ENGINEER

2008 REVISION — SHEET 11

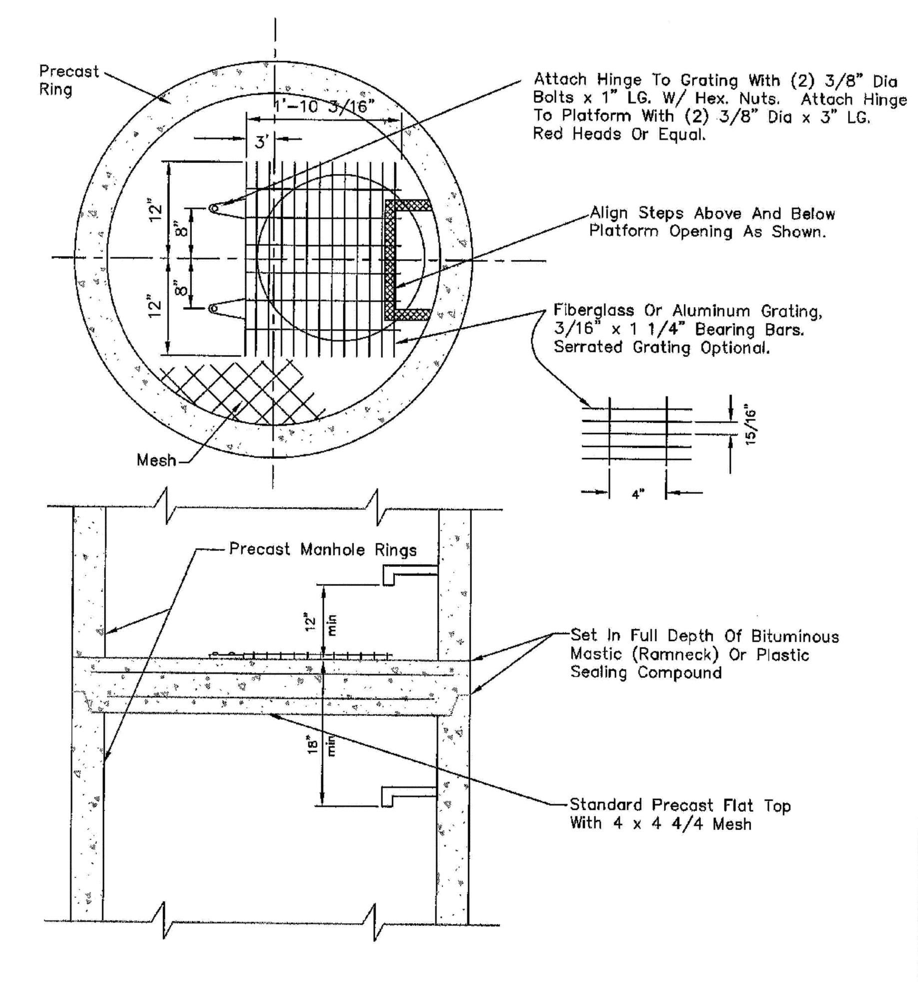

NOTES:
1.1 Maximum distance between platforms shall be 15' vertically.
1.2 Minimum distance between platforms shall be 10' vertically.

PARKER WATER
& SANITATION DISTRICT

INTERMEDIATE PLATFORM FOR MANHOLES OVER 20' DEPTH

SCALE: NONE | DATE: 2/96
APPROVED: RJG | 2/00
DISTRICT ENGINEER

2008 REVISION — SHEET 14

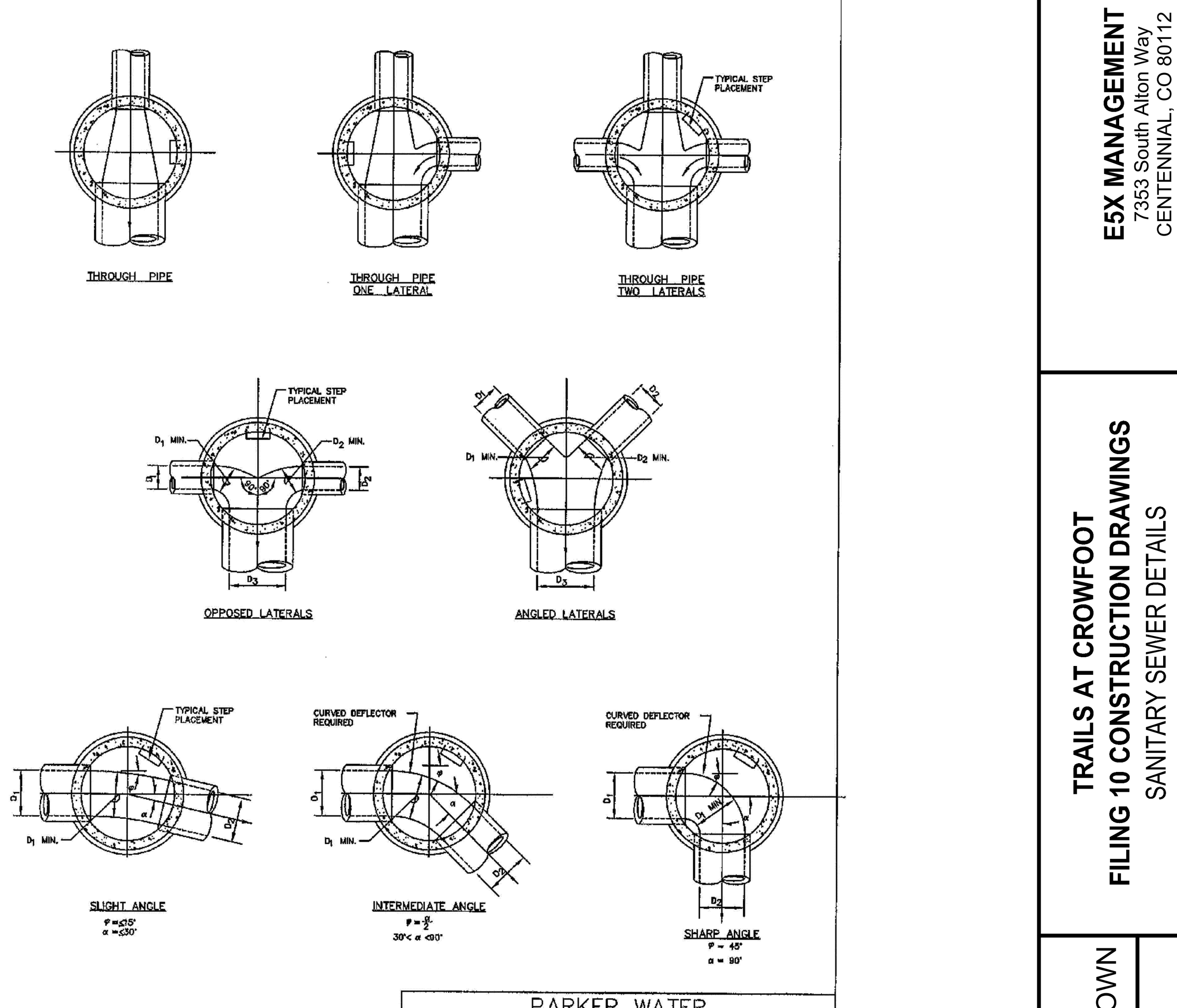

PARKER WATER
& SANITATION DISTRICT

TYPICAL BASE CHANNELIZATION DETAILS

SCALE: NONE | DATE: 2/96
APPROVED: JFN
DISTRICT ENGINEER

2008 REVISION — SHEET 15

CALL 811
TWO WORKING DAYS
BEFORE YOU DIG
1-800-922-1987
UNCC UTILITY NOTIFICATION CENTER OF COLORADO

N:\PROJECTS\HESS RANCH\CAD\ENGINEERING\SHEET SETS\CD'S\F10\PARKER WATER AND SANITATION\SANITARY SEWER DETAILS.DWG, LAURAC, 8/23/2017 3:51 PM

No.	Revisions	Date	Init.	Appr.	Date

CVL CONSULTANTS
10333 E. Dry Creek Rd.
Suite 240
Englewood, CO 80112
Tel: (720) 482-9526
Fax: (720) 482-9546

E5X MANAGEMENT
7353 South Alton Way
CENTENNIAL, CO 80112

TRAILS AT CROWFOOT
FILING 10 CONSTRUCTION DRAWINGS
SANITARY SEWER DETAILS

DRAWN BY: JF
CHECKED BY: JJJ
DATE: SEPTEMBER 2017
SCALE: AS SHOWN
FILE NO: 8130283701
SHEET NUMBER 20

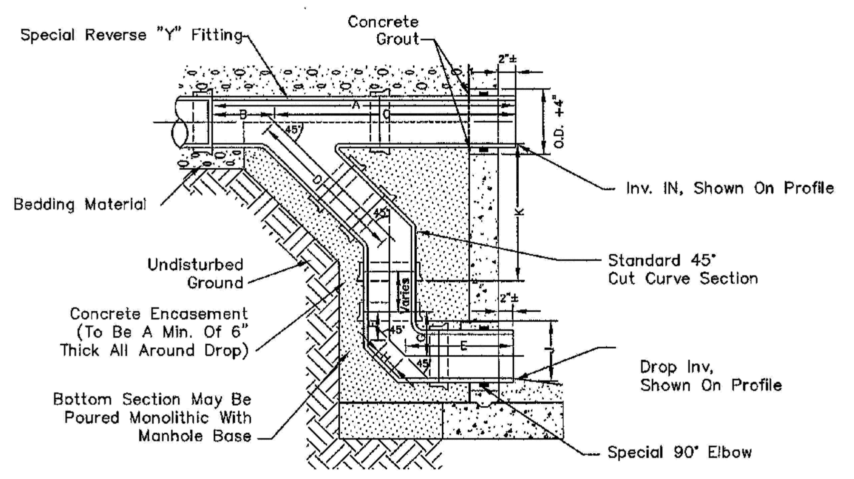

SECTION THRU DROP

PIPE I.D.	A	B	C	D	E	F	G	H	J	K	J+K
8"	60"	26"	34"	18"	21"	4 1/2"	8"	4 3/8"	12"	15 7/8"	27 7/8"
10"	60"	20"	40"	21"	21"	5 1/8"	9"	5 1/2"	14"	18 1/2"	32 1/2"
12"	60"	18"	42"	24"	21"	5 7/8"	10 3/4"	5 7/8"	16 3/4"	21"	35 7/8"
16"	78"	38"	50"	30"	24"	7"	12 1/2"	7 3/4"	20"	25 7/8"	45 7/8"

NOTES:

1. Vit Clay Pipe & fittings (A.S.T.M. C-700) shown, details similar for all other pipe.
2. For payment purposed: all fittings, pipe, concrete encasement except special "Y" fitting shall be included in the cost of outside drop. The cost of the special "Y" fitting shall be included in the unit price bid for line pipe.
3. Diameter of drop shall not be less than the line pipe diameter.
4. For 18" diameter and larger, outside drop detail shall be a special design.

OUTSIDE DROP MANHOLE CONSTRUCTION

PARKER WATER & SANITATION DISTRICT
OUTSIDE DROP MANHOLE CONSTRUCTION
SCALE: NONE — DATE: 2/96
APPROVED: JFN
DISTRICT ENGINEER

2008 REVISION — SHEET 16

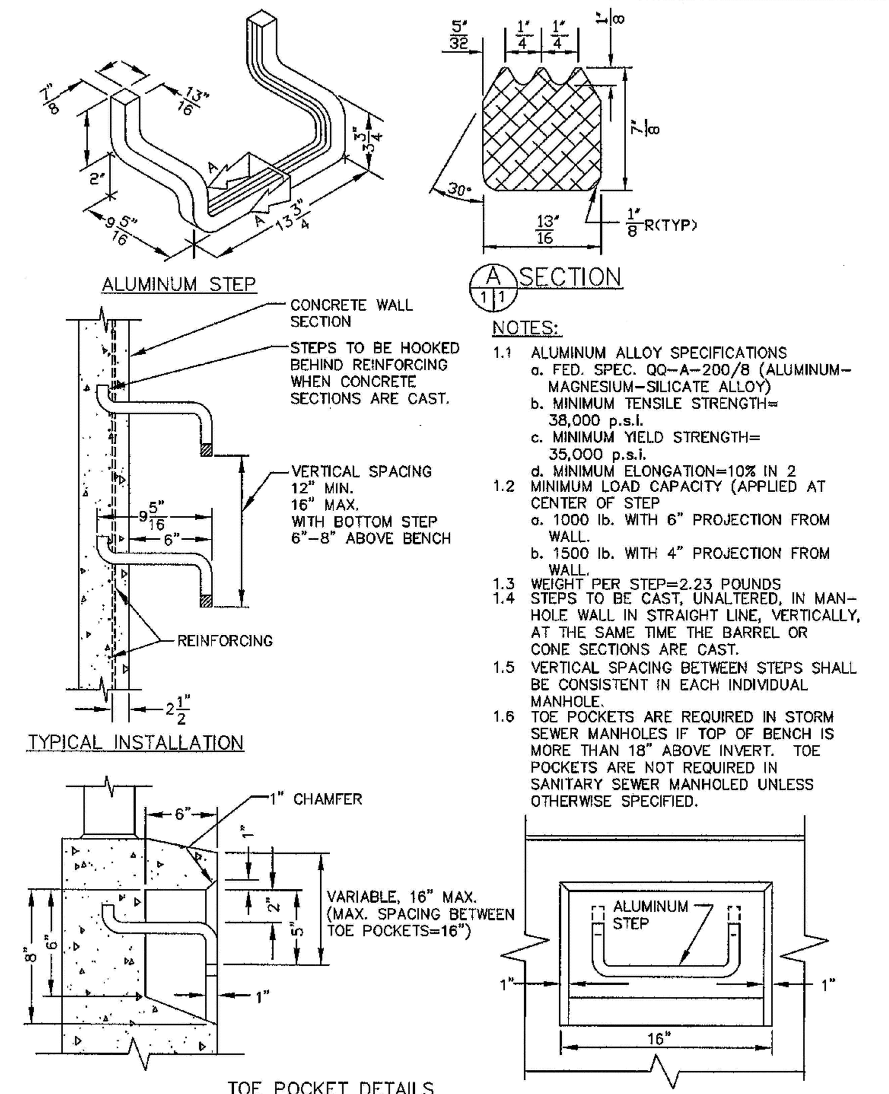

NOTES:

1.1 ALUMINUM ALLOY SPECIFICATIONS
a. FED. SPEC. QQ-A-200/8 (ALUMINUM-MAGNESIUM-SILICATE ALLOY)
b. MINIMUM TENSILE STRENGTH= 38,000 p.s.i.
c. MINIMUM YIELD STRENGTH= 35,000 p.s.i.
d. MINIMUM ELONGATION=10% IN 2
1.2 MINIMUM LOAD CAPACITY (APPLIED AT CENTER OF STEP
a. 1000 lb. WITH 6" PROJECTION FROM WALL.
b. 1500 lb. WITH 4" PROJECTION FROM WALL.
1.3 WEIGHT PER STEP=2.23 POUNDS
1.4 STEPS TO BE CAST, UNALTERED, IN MANHOLE WALL IN STRAIGHT LINE, VERTICALLY, AT THE SAME TIME THE BARREL OR CONE SECTIONS ARE CAST.
1.5 VERTICAL SPACING BETWEEN STEPS SHALL BE CONSISTENT IN EACH INDIVIDUAL MANHOLE.
1.6 TOE POCKETS ARE REQUIRED IN STORM SEWER MANHOLES IF TOP OF BENCH IS MORE THAN 18" ABOVE INVERT. TOE POCKETS ARE NOT REQUIRED IN SANITARY SEWER MANHOLED UNLESS OTHERWISE SPECIFIED.

STANDARD EXTRUDED ALUMINUM MANHOLE STEP

PARKER WATER & SANITATION DISTRICT
STANDARD EXTRUDED ALUMINUM MANHOLE STEP
SCALE: NONE — DATE: 2/96
APPROVED: JFN
DISTRICT ENGINEER

2008 REVISION — SHEET 18

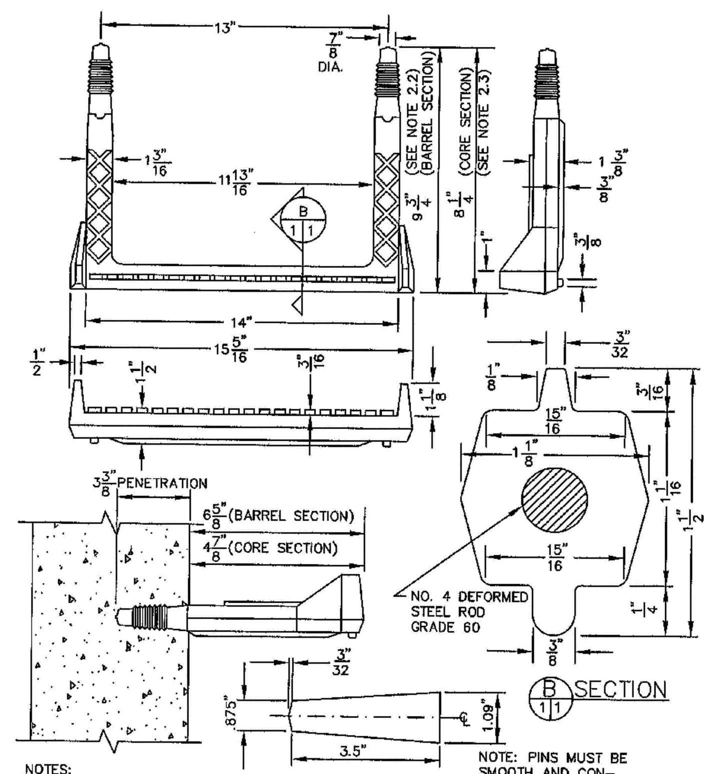

NOTES:

2.1 ASTM SPECIFICATIONS:
a) ASTM C-478
b) ASTM A-615 GRADE 60 (STEEL ROD)
c) ASTM 2146-69, TYPE II, GRADE 16906 (POLYPROPYLENE)
2.2 STEPS INSTALLED IN MANHOLE BARREL SECTIONS OR VERTICAL WALLS OF STRUCTURE SHALL HAVE A 9-3/4 INCH LEG AND SHALL PROJECT FROM THE WALL 6-5/8 INCHES.
2.3 STEPS INSTALLED IN MANHOLE CONE SECTIONS SHALL HAVE AN 8-1/4 INCH LEG AND SHALL PROJECT FROM THE WALL 4-7/8 INCHES.
2.4 ALL STEPS SHALL HAVE A PENETRATION DEPTH INTO THE WALL OF 3-3/8 INCHES.
2.5 STEPS SHALL BE INSTALLED BY THE "PRESS-FIT" METHOD UTILIZING A SPECIALLY TAPERED PIN TO FORM THE INSERT HOLE AS SHOWN.
2.6 INSTALLED STEPS SHALL BE CAPABLE OF WITHSTANDING A PULL OUT FORCE OF 2500 P.S.I. PER LEG FOR A MINIMUM PERIOD OF TWO MINUTES.
2.7 STEPS SHALL BE INSTALLED BY THE "PRESS-FIT" METHOD EXCLUSIVELY FOLLOWING MANUFACTURER'S RECOMMENDED PROCEDURE AND SHALL NOT BE GROUTED IN PLACE.

POLYPROPYLENE REINFORCED PLASTIC STEP

PARKER WATER & SANITATION DISTRICT
POLYPROPYLENE REINFORCED PLASTIC MANHOLE STEP
SCALE: NONE — DATE: 2/00
APPROVED: JFN
DISTRICT ENGINEER

2008 REVISION — SHEET 19A

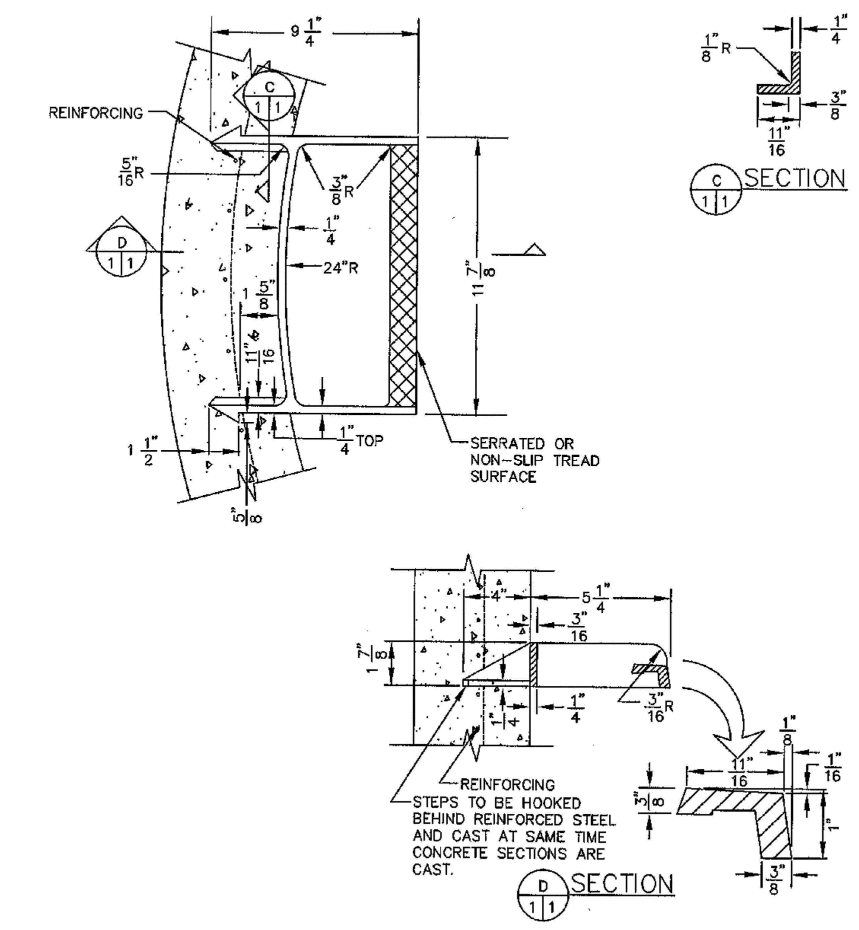

CAST ALUMINUM MANHOLE STEP

NOTES:
3.1 THE CAST ALUMINUM MANHOLE STEP SHALL ONLY BE USED WHEN SPECIFIED ON THE DRAWINGS.
3.2 ALUMINUM ALLOY SPECIFICATIONS:
a. ALLOY DESIGNATION ALMAG 35
b. MIN. TENSILE STRENGTH= 40 K.S.I.
c. MIN. YIELD STRENGTH= 20 K.S.I.
d. MIN. SHEAR STRENGTH= 27.45 K.S.I.
e. ELONGATION= 10% IN 2
f. BRINELL HARDNESS= 70
3.3 MINIMUM LOAD CAPACITY, STEP SPACING AND ALIGNMENT, TOE POCKET DETAILS AND OTHER APPLICABLE NOTES OR DETAILS SPECIFIED FOR EXTRUDED ALUMINUM MANHOLE STEP SHALL ALSO APPLY TO THIS STANDARD.
3.4 MIN. WT. = 2.0 lb.

PARKER WATER & SANITATION DISTRICT
CAST ALUMINUM MANHOLE STEP
SCALE: NONE — DATE: 2/96
APPROVED: JFN
DISTRICT ENGINEER

2008 REVISION — SHEET 19

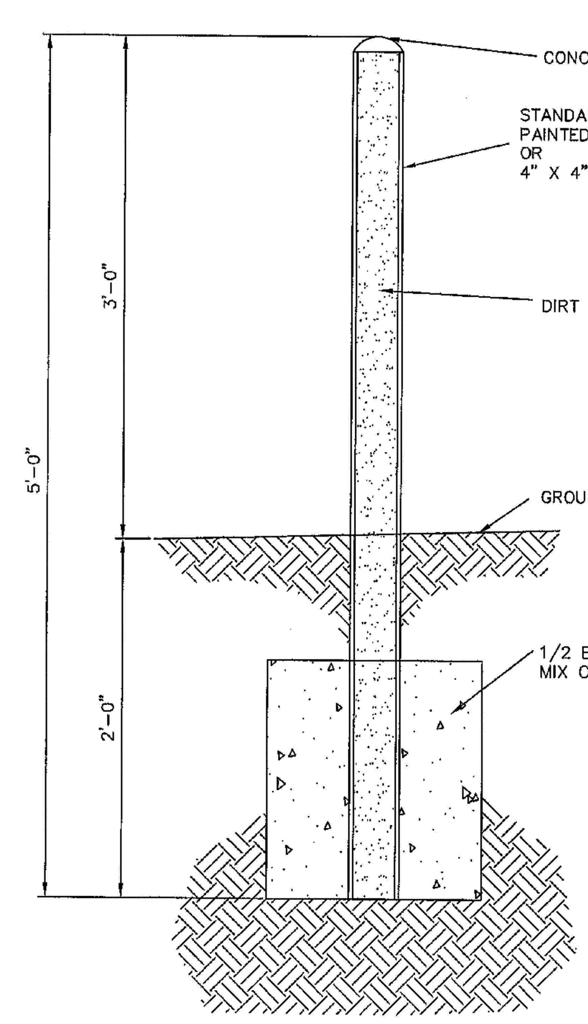

MARKER POST DETAIL

STEEL PIPE
STENCILED IDENTIFICATION MARKS ON POSTS SHALL FACE THE APPURTENANCE WITH 2" STENCILS INDICATING TYPE OF APPURTENANCE (MH, 12" VALVE, ETC.) AND THE DISTANCE IN FEET AND INCHES FROM POST.

REDWOOD POST
ROUTER LETTERS AND NUMBERS INTO POST. PAINT LETTERS AND NUMBERS BLACK.

PARKER WATER & SANITATION DISTRICT
MARKER POST DETAIL
SCALE: NONE — DATE: 2/96
APPROVED: JFN — 2/00 4/01 1/08
DISTRICT ENGINEER

2008 REVISION — SHEET 20

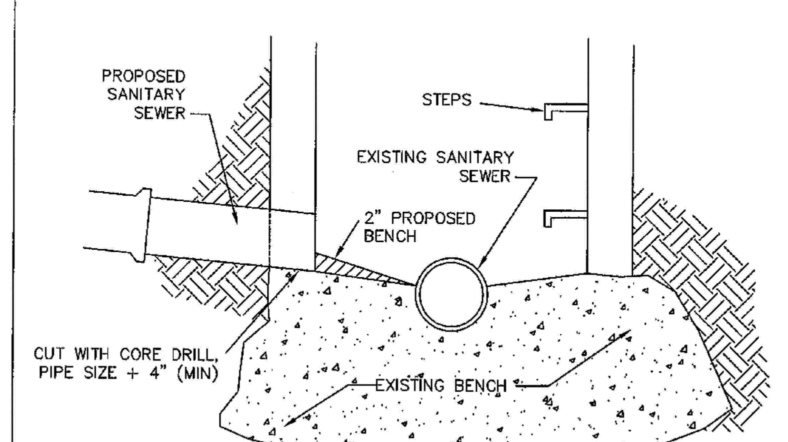

MANHOLE INVERT TIE-IN

PARKER WATER & SANITATION DISTRICT
MANHOLE INVERT TIE-IN DETAIL
SCALE: NONE — DATE: 2/96
APPROVED: JFN
DISTRICT ENGINEER

2008 REVISION — SHEET 21

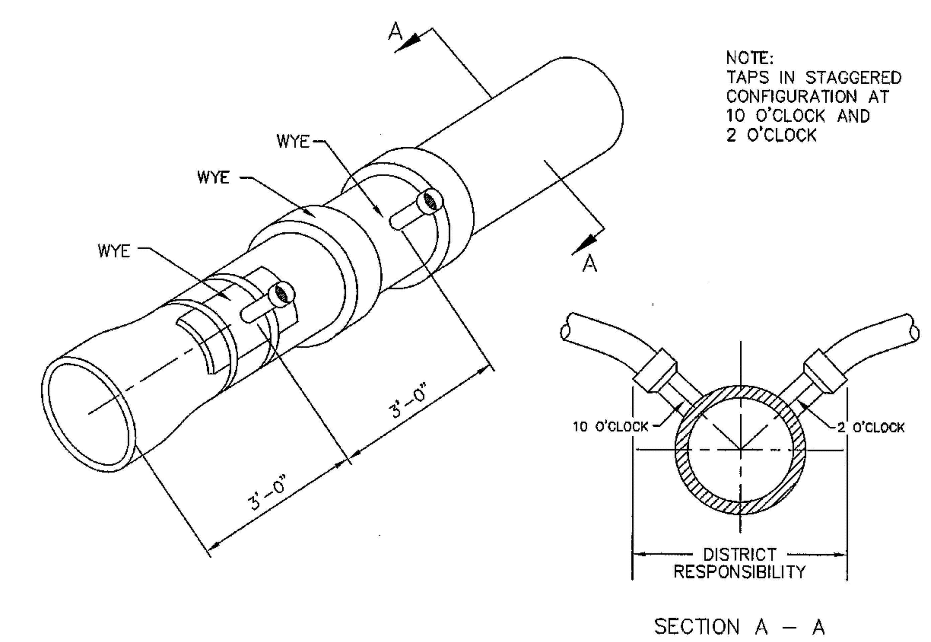

SEWER

Service connections – Sewer service connections shall be positioned at either the 2 o'clock or the 10 o'clock postion on the circumference of the sewer main. On new installations, tee or wye fittings shall be used. When tapping into existing sewer main, a saddle connection and approved coring method shall be used. The minimum distance between service connections made along the pipe shall be 3 feet. The minimum distance from either the bell or spigot end of a pipe shall be 3 feet. The minimum distance from the center of a manhole to a service connection shall be either 7 feet or the transition point from the manhole trench to the normal pipe trench, whichever is greater. A maximum of 4 sewer service connections shall be allowed per 20 foot length of pipe. In al cases, a specific soils investigation should be conducted to assure that the external loading will be within allowable limits regardless of the number of taps involved.

DOMESTIC SEWER TAPPING DETAIL

PARKER WATER & SANITATION DISTRICT
DOMESTIC SEWER TAPPING DETAIL
SCALE: NONE — DATE: 2/96
APPROVED: JFN — 4/01 1/08
DISTRICT ENGINEER

2008 REVISION — SHEET 26

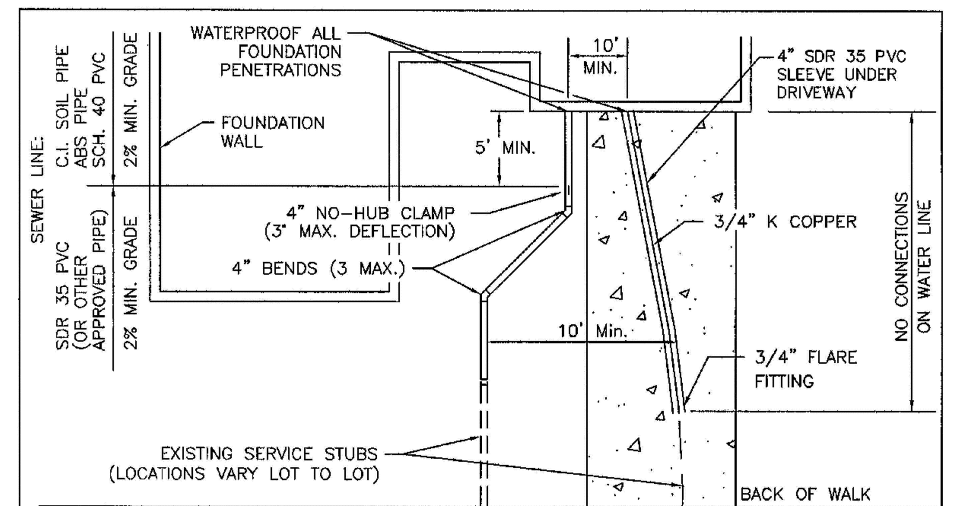

TYPICAL SERVICES PLAN VIEW

NTS

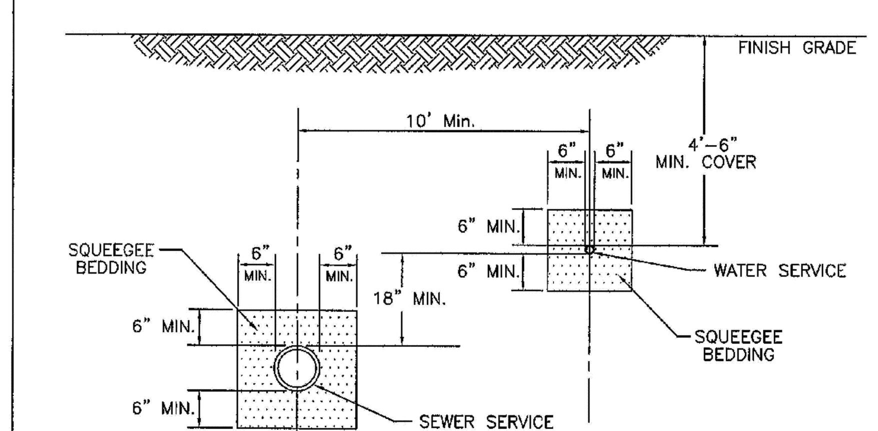

TYPICAL SERVICES SECTION

NTS

NOTE
SEE SHEET 28 FOR DISTRICT POLICIES AND INSTALLATION NOTES.

PARKER WATER & SANITATION DISTRICT
TYPICAL SEWER SERVICES
SCALE: NONE — DATE: 2/96
APPROVED: JFN — 2/00 01/02
DISTRICT ENGINEER

2008 REVISION — SHEET 27

No.	Revisions	Date	Init.	Appr.	Date

CVL CONSULTANTS
10333 E. Dry Creek Rd. Suite 240
Englewood, CO 80112
Tel: (720) 482-9526
Fax: (720) 482-9546

E5X MANAGEMENT
7353 South Alton Way
CENTENNIAL, CO 80112

TRAILS AT CROWFOOT
FILING 10 CONSTRUCTION DRAWINGS
SANITARY SEWER DETAILS

SCALE: AS SHOWN
FILE NO: 8130283701
DRAWN BY: JF
CHECKED BY: JJJ
DATE: SEPTEMBER 2017

SHEET NUMBER 21

CALL 811
TWO WORKING DAYS
BEFORE YOU DIG
1-800-922-1987
UNCC UTILITY NOTIFICATION CENTER OF COLORADO

N:\PROJECTS\HESS RANCH\CAD\ENGINEERING\SHEET SETS\CD'S\F10\PARKER WATER AND SANITATION\SANITARY SEWER DETAILS.DWG, LAURAC, 8/23/2017 3:51 PM

INSPECTION POLICY:

1. ALL SERVICE INSPECTIONS MUST BE SCHEDULED WITH THE DISTRICT OFFICE (303-841-4627) AT LEAST 24 HOURS IN ADVANCE OF THE REQUESTED INSPECTION.
2. SERVICE INSPECTIONS WILL OCCUR BETWEEN 1:00 P.M. AND 4:00 P.M. SPECIFIC INSPECTION TIMES ARE NOT AVAILABLE.
3. IF THE CONTRACTOR IS NOT READY FOR INSPECTION WHEN THE INSPECTOR ARRIVES AT THE SITE, A RE-INSPECTION WILL HAVE TO BE SCHEDULED IN ACCORDANCE WITH NOTES 1 AND 2 ABOVE AND A RE-INSPECTION FEE CHARGED.
4. SHOULD THE SERVICE LINES BE DAMAGED BY LATER CONSTRUCTION, AN INSPECTION OF THE REPAIR WILL BE REQUIRED IN ACCORDANCE WITH NOTES 1 AND 2 ABOVE.
5. THE CONTRACTOR SHALL LEAVE ALL PIPE AND FITTINGS EXPOSED FOR THE INSPECTOR TO OBSERVE. INSPECTORS WILL NOT ENTER ANY EXCAVATIONS TO CHECK MATERIALS. THE TOP LAYER OF BEDDING CAN BE ADDED AFTER THE INSPECTION HAS BEEN COMPLETED.
6. ALL EXCAVATIONS SHALL BE IN ACCORDANCE WITH OSHA STANDARDS.

INSTALLATION NOTES:

SEWER

1. ACCEPTABLE PIPE MATERIALS ARE TO BE SDR 35 PVC PIPE, ABS PIPE AND CAST IRON CLASS 22 SOIL PIPE. APPROVED BEDDING IS TO BE SQUEEGEE.
2. NO-HUB CLAMPS SHALL BE USED TO JOIN 2 MALE PIPE ENDS WITH A MAXIMUM DEFLECTION OF 3°.
3. MINIMUM GRADE SHALL BE 2%.
4. INSTALLATION SHALL INCLUDE NO MORE THAN 3 BENDS. 90° BENDS ARE NOT ALLOWED. SOLVENT WELDED PIPE WILL NOT BE ALLOWED.
5. CLEAN-OUTS SHALL BE INSTALLED AT 100' INTERVALS. CLEAN-OUTS ARE NOT REQUIRED FOR SERVICES LESS THAN 100'.
6. STRESSING OF THE PIPE BETWEEN FITTINGS WILL NOT BE ALLOWED.

PARKER WATER & SANITATION DISTRICT	
DISTRICT POLICIES & INSTALLATION NOTES FOR SEWER SERVICES	
SCALE: NONE	DATE: 2/96
APPROVED: JFN DISTRICT ENGINEER	01/02 1/08

2008 REVISION

SHEET 28

CALL 811
TWO WORKING DAYS
BEFORE YOU DIG
1-800-922-1987
UNCC UTILITY NOTIFICATION CENTER OF COLORADO

N:\PROJECTS\HESS RANCH\CAD\ENGINEERING\SHEET SETS\CD'S\F10\PARKER WATER AND SANITATION\SANITARY SEWER DETAILS.DWG, LAURAC, 8/23/2017 3:51 PM

No.	Revisions	Date	Init.	Appr.	Date

CVL CONSULTANTS
10333 E. Dry Creek Rd.
Suite 240
Englewood, CO 80112
Tel: (720) 482-9526
Fax: (720) 482-9546

E5X MANAGEMENT
7353 South Alton Way
CENTENNIAL, CO 80112

TRAILS AT CROWFOOT
FILING 10 CONSTRUCTION DRAWINGS
SANITARY SEWER DETAILS

DRAWN BY: JF		SCALE: AS SHOWN	
CHECKED BY: JJJ		FILE NO: 8130283701	
DATE: SEPTEMBER 2017			

SHEET NUMBER
22

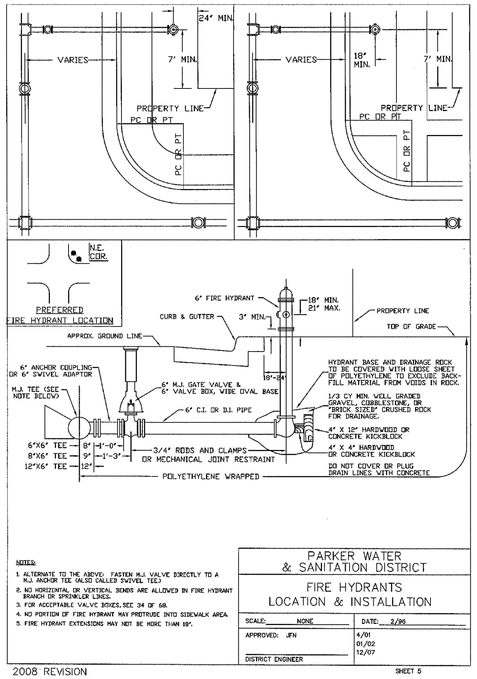

NOTES:
1. ALTERNATE TO THE ABOVE: FASTEN M.J. VALVE DIRECTLY TO A M.J. ANCHOR TEE (ALSO CALLED SWIVEL TEE)
2. NO HORIZONTAL OR VERTICAL BENDS ARE ALLOWED IN FIRE HYDRANT BRANCH OR SPRINKLER LINES.
3. FOR ACCEPTABLE VALVE BOXES, SEE 34 OF 68.
4. NO PORTION OF FIRE HYDRANT MAY PROTRUDE INTO SIDEWALK AREA.
5. FIRE HYDRANT EXTENSIONS MAY NOT BE MORE THAN 18".

PARKER WATER & SANITATION DISTRICT
FIRE HYDRANTS LOCATION & INSTALLATION
SCALE: NONE DATE: 2/96
APPROVED: JFN 4/01 01/02 12/07
DISTRICT ENGINEER

2008 REVISION SHEET 5

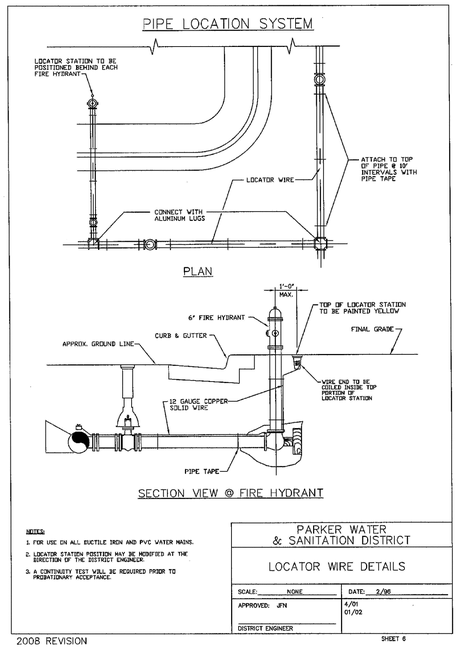

NOTES:
1. FOR USE ON ALL DUCTILE IRON AND PVC WATER MAINS.
2. LOCATOR STATION POSITION MAY BE MODIFIED AT THE DIRECTION OF THE DISTRICT ENGINEER.
3. A CONTINUITY TEST WILL BE REQUIRED PRIOR TO PRELIMINARY ACCEPTANCE.

PARKER WATER & SANITATION DISTRICT
LOCATOR WIRE DETAILS
SCALE: NONE DATE: 2/96
APPROVED: JFN 4/01 01/02
DISTRICT ENGINEER

2008 REVISION SHEET 6

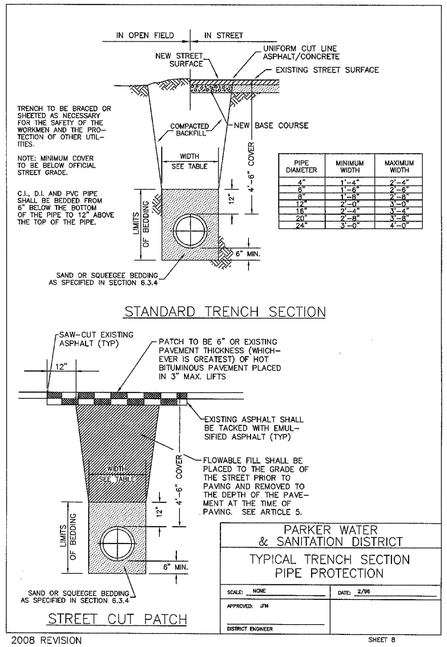

PIPE DIAMETER	MINIMUM WIDTH	MAXIMUM WIDTH
4"	1'-4"	2'-4"
6"	1'-6"	2'-6"
8"	1'-8"	2'-8"
12"	2'-0"	3'-0"
18"	2'-4"	3'-4"
20"	2'-8"	3'-8"
24"	3'-0"	4'-0"

PARKER WATER & SANITATION DISTRICT
TYPICAL TRENCH SECTION PIPE PROTECTION
SCALE: NONE DATE: 2/96
APPROVED: JFN
DISTRICT ENGINEER

2008 REVISION SHEET 8

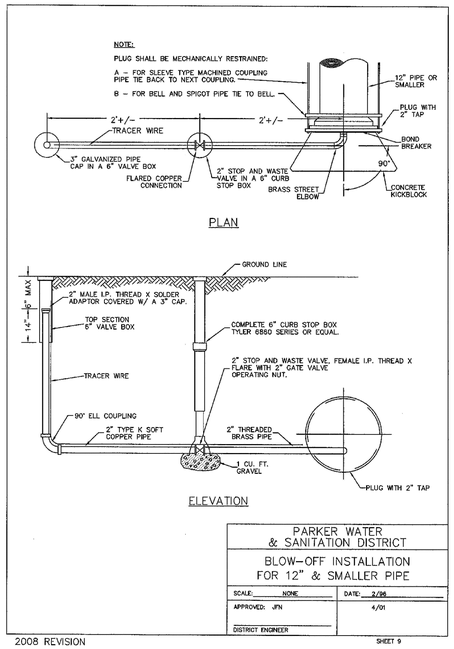

PARKER WATER & SANITATION DISTRICT
BLOW-OFF INSTALLATION FOR 12" & SMALLER PIPE
SCALE: NONE DATE: 2/96
APPROVED: JFN 4/01
DISTRICT ENGINEER

2008 REVISION SHEET 9

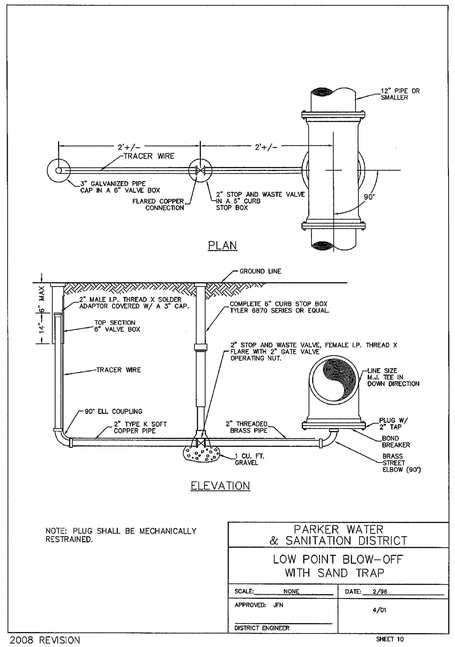

NOTE: PLUG SHALL BE MECHANICALLY RESTRAINED.

PARKER WATER & SANITATION DISTRICT
LOW POINT BLOW-OFF WITH SAND TRAP
SCALE: NONE DATE: 2/96
APPROVED: JFN 4/01
DISTRICT ENGINEER

2008 REVISION SHEET 10

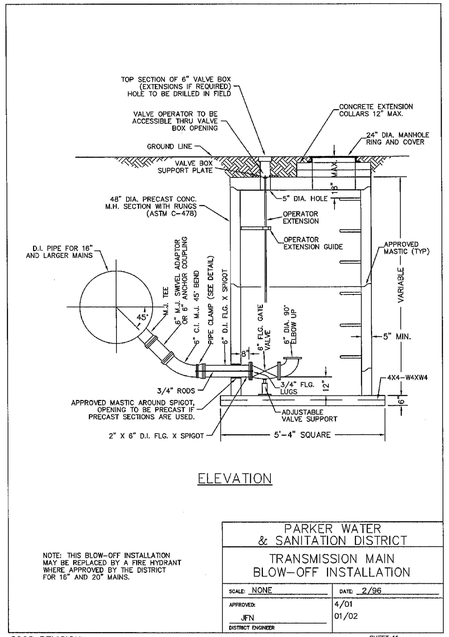

NOTE: THIS BLOW-OFF INSTALLATION MAY BE REPLACED BY A FIRE HYDRANT WHERE APPROVED BY THE DISTRICT FOR 16" AND 20" MAINS.

PARKER WATER & SANITATION DISTRICT
TRANSMISSION MAIN BLOW-OFF INSTALLATION
SCALE: NONE DATE: 2/96
APPROVED: JFN 4/01 01/02
DISTRICT ENGINEER

2008 REVISION SHEET 11

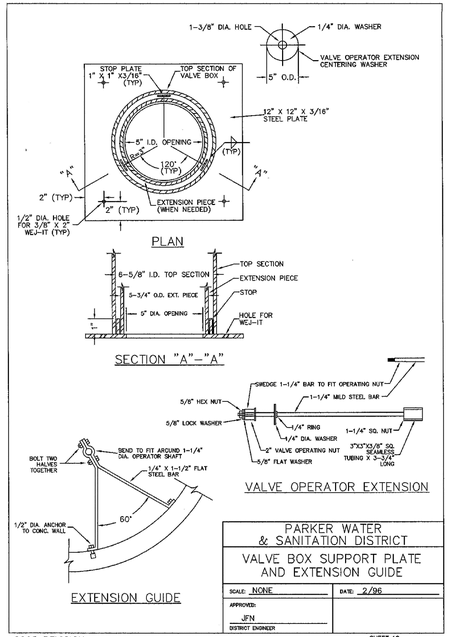

PARKER WATER & SANITATION DISTRICT
VALVE BOX SUPPORT PLATE AND EXTENSION GUIDE
SCALE: NONE DATE: 2/96
APPROVED: JFN
DISTRICT ENGINEER

2008 REVISION SHEET 12

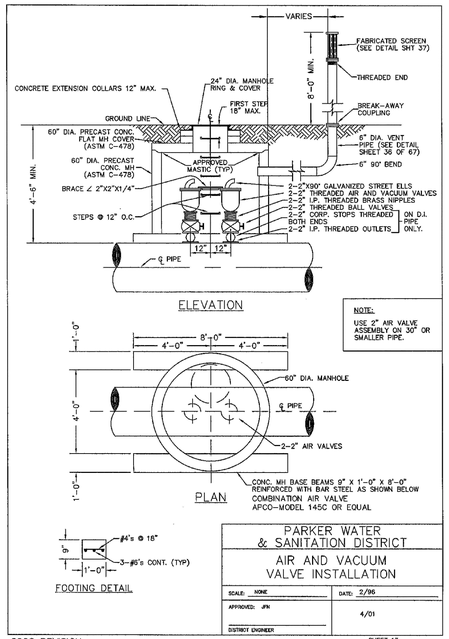

PARKER WATER & SANITATION DISTRICT
AIR AND VACUUM VALVE INSTALLATION
SCALE: NONE DATE: 2/96
APPROVED: JFN 4/01
DISTRICT ENGINEER

2008 REVISION SHEET 13

CALL 811
TWO WORKING DAYS
BEFORE YOU DIG
1-800-922-1987
UNCC UTILITY NOTIFICATION CENTER OF COLORADO

N:\PROJECTS\HESS RANCH\CAD\ENGINEERING\SHEET SETS\CD'S\F10\PARKER WATER AND SANITATION\WATER DETAILS.DWG, LAURAC, 8/23/2017 3:52 PM

No.	Revisions	Date	Init.	Date	Appr.

CVL CONSULTANTS
10333 E. Dry Creek Rd.
Suite 240
Englewood, CO 80112
Tel: (720) 482-9526
Fax: (720) 482-9546

E5X MANAGEMENT
7353 South Alton Way
CENTENNIAL, CO 80112

TRAILS AT CROWFOOT
FILING 10 CONSTRUCTION DRAWINGS
WATER DETAILS

SHEET NUMBER 23
DRAWN BY: JF
CHECKED BY: JJJ
DATE: SEPTEMBER 2017
SCALE: AS SHOWN
FILE NO: 8130283701

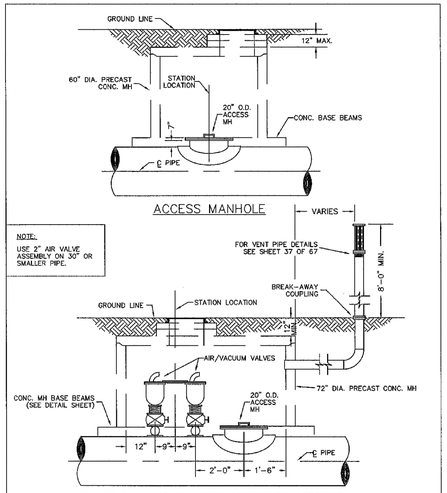

NOTE:
USE 2" AIR VALVE ASSEMBLY ON 30" OR SMALLER PIPE.

NOTE:
SEE SHEET 13 OF 67 FOR CONCRETE MANHOLE BASE BEAMS AND AIR/VACUUM VALVE DETAILS.

PARKER WATER & SANITATION DISTRICT
ACCESS MANHOLE ASSEMBLY
SCALE: NONE | DATE: 2/96
APPROVED: JFN DISTRICT ENGINEER | 4/01

2008 REVISION | SHEET 14

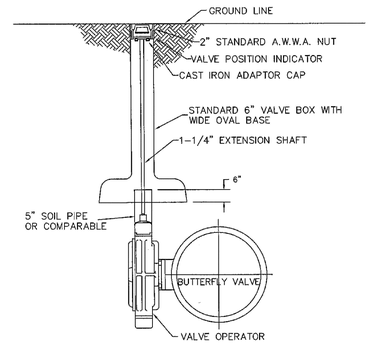

NOTE: THE VALVE BOX SHALL NOT BE PLACED DIRECTLY ON SOIL PIPE.

PARKER WATER & SANITATION DISTRICT
TRANSMISSION MAIN BUTTERFLY VALVE INSTALLATION
SCALE: NONE | DATE: 2/96
APPROVED: JFN DISTRICT ENGINEER

2008 REVISION | SHEET 15

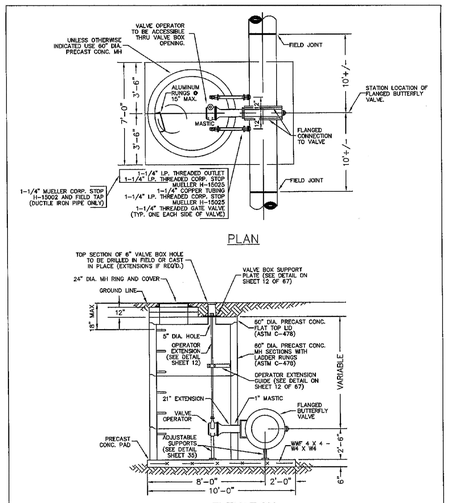

PARKER WATER & SANITATION DISTRICT
20",24" AND 30" BUTTERFLY VALVE ASSEMBLY
SCALE: NONE | DATE: 2/96
APPROVED: JFN DISTRICT ENGINEER | 4/01

2008 REVISION | SHEET 16

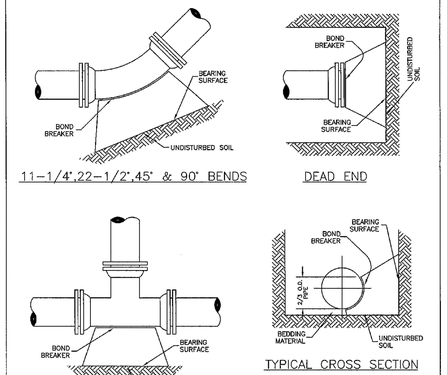

MINIMUM BEARING SURFACE AREA (IN SQUARE FEET)

SIZE OF PIPE	BENDS 11-1/4°	22-1/2°	45°	90°	TEE OR DEAD END
4"	1.00	1.00	1.60	1.80	1.00
6"	1.00	1.25	2.25	4.00	3.00
8"	1.00	2.00	4.00	7.00	5.25
12"	2.00	4.25	8.25	15.25	11.00
16"	3.50	6.50	12.50	23.00	16.50
20"	5.00	10.00	19.50	35.50	25.00
24"	6.50	13.00	26.00	47.00	33.00

NOTES:

1. ALL VALVES, TEES, BENDS AND PLUGS SHALL BE RODDED AND KICKBLOCKED.
2. BEARING SURFACES SHOWN IN CHART ARE MINIMUM.
3. BASED ON 150 PSI PIPE PRESSURE PLUS WATER HAMMER:
   4", 6" AND 8" WATER HAMMER = 120 PSI.
   12" WATER HAMMER = 110 PSI
   16", 20" AND 24" WATER HAMMER = 70 PSI.
4. SOIL BEARING CAPACITY = 3,000 LBS./SQ. FT.

PARKER WATER & SANITATION DISTRICT
CONCRETE KICKBLOCKS
BEARING SURFACES AND INSTALLATION
SCALE: NONE | DATE: 2/96
APPROVED: JFN DISTRICT ENGINEER | 4/01

2008 REVISION | SHEET 17

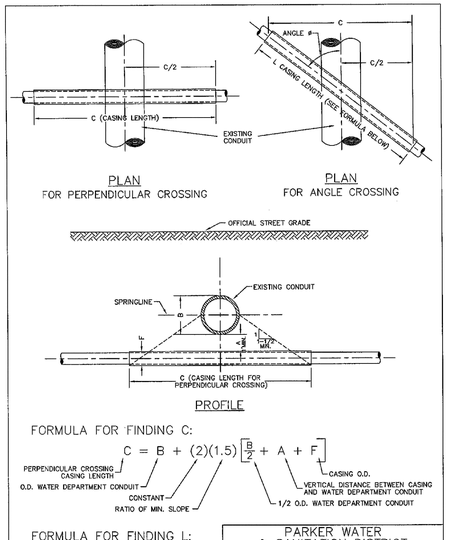

FORMULA FOR FINDING C:

$$C = B + (2)(1.5)\left[\frac{\phi}{2}\right] + A + F$$

B — PERPENDICULAR CROSSING CASING LENGTH
φ — O.D. WATER DEPARTMENT CONDUIT
1.5 — CONSTANT RATIO OF MIN. SLOPE
φ/2 — 1/2 O.D. WATER DEPARTMENT CONDUIT
A — VERTICAL DISTANCE BETWEEN CASING AND WATER DEPARTMENT CONDUIT
F — CASING O.D.

FORMULA FOR FINDING L:

$$L = \frac{C}{\sin \phi}$$

NOTES:

1. FINAL APPROVAL OF BORING AND CASING METHOD AND MATERIALS SHALL BE OBTAINED FROM THE ENGINEER PRIOR TO CONSTRUCTION.

PARKER WATER & SANITATION DISTRICT
BORED CROSSINGS BENEATH CONDUITS
SCALE: NONE | DATE: 2/96
APPROVED: JFN DISTRICT ENGINEER | 2/00

2008 REVISION | SHEET 25

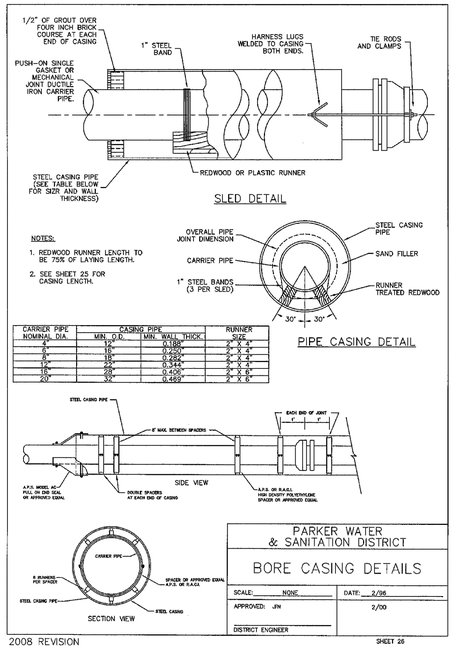

CARRIER PIPE NOMINAL DIA.	CASING PIPE MIN. O.D.	MIN. WALL THICK.	RUNNER SIZE
4"	12"	0.188"	3" X 4"
6"	16"	0.250"	3" X 4"
8"	18"	0.282"	3" X 4"
12"	26"	0.344"	3" X 4"
16"	28"	0.406"	3" X 6"
20"	32"	0.469"	3" X 6"

NOTES:

1. REDWOOD RUNNER LENGTH TO BE 75% OF LAYING LENGTH.
2. SEE SHEET 25 FOR CASING LENGTH.

PARKER WATER & SANITATION DISTRICT
BORE CASING DETAILS
SCALE: NONE | DATE: 2/96
APPROVED: JFN DISTRICT ENGINEER | 2/00

2008 REVISION | SHEET 26

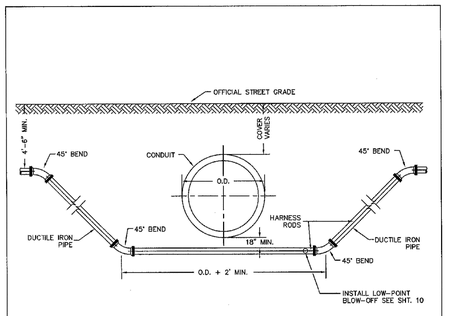

NOTES:

1. LENGTH OF EXTENSION OF PIPE AND HARNESS RODS SHALL BE IN ACCORDANCE WITH THESE ENGINEERING STANDARDS.
2. ALL WATER MAINS TWELVE (12") INCHES OR SMALLER, WHICH CROSS UNDER DISTRICT CONDUITS SHALL BE DUCTILE IRON.
3. A BORED CROSSING MAY BE REQUIRED BY THE ENGINEER.

PARKER WATER & SANITATION DISTRICT
CONDUIT OR STORM SEWER CROSSING
SCALE: NONE | DATE: 2/96
APPROVED: JFN DISTRICT ENGINEER | 5/98 2/00 12/07

2008 REVISION | SHEET 27

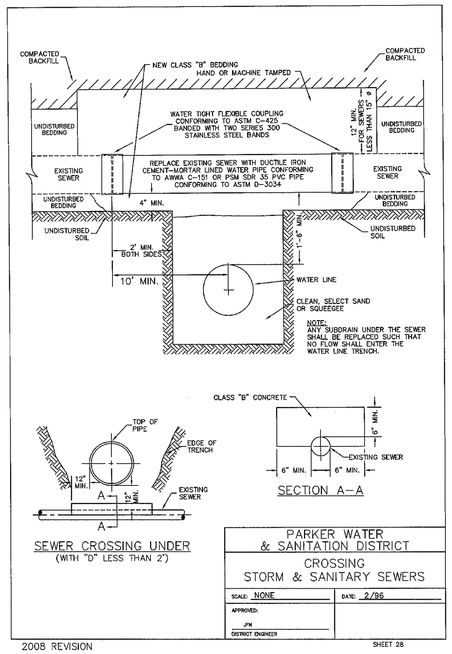

PARKER WATER & SANITATION DISTRICT
CROSSING STORM & SANITARY SEWERS
SCALE: NONE | DATE: 2/96
APPROVED: JFN DISTRICT ENGINEER

2008 REVISION | SHEET 28

CALL 811
TWO WORKING DAYS
BEFORE YOU DIG
1-800-922-1987
UNCC UTILITY NOTIFICATION CENTER OF COLORADO

N:\PROJECTS\HESS RANCH\CAD\ENGINEERING\SHEET SETS\CD'S\SF1\DP\PARKER WATER AND SANITATION\WATER DETAILS.DWG, LAURAC, 8/23/2017 3:52 PM

No.	Revisions	Date	Init.	Appr.	Date

CVL CONSULTANTS
10333 E. Dry Creek Rd.
Suite 240
Englewood, CO 80112
Tel: (720) 482-9526
Fax: (720) 482-9546

E5X MANAGEMENT
7353 South Alton Way
CENTENNIAL, CO 80112

TRAILS AT CROWFOOT
FILING 10 CONSTRUCTION DRAWINGS
WATER DETAILS

SHEET NUMBER 24
DRAWN BY: JF
CHECKED BY: JJJ
DATE: SEPTEMBER 2017
SCALE: AS SHOWN
FILE NO: 8130283701

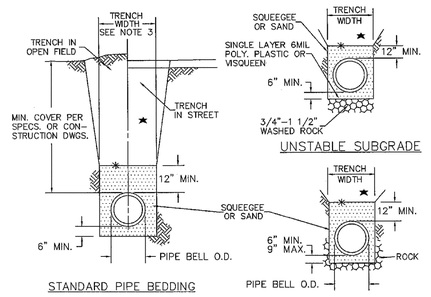

★ MACHINE COMPACTED TRENCH BACKFILL

✳ LIMIT OF SLOPING OR BENCHING OF TRENCH WALLS

UNDISTURBED GROUND

NOTES:

1. MIN .COVER TO BE BELOW FINAL STREET GRADE WHEN AVAILABLE.
2. TRENCH TO BE BRACED OR SHEETED AS NECESSARY FOR THE PROTECTION OF OTHER UTILITIES AND TO MEET OSHA SAFETY REQUIREMENT.
3. TRENCH WIDTH SHALL NOT BE MORE THAN 16" NOR LESS THAN 12" WIDER THAN THE LARGEST OUTSIDE DIAMETER OF THE PIPE LAID THEREIN (BELL OR COUPLING O.D. IF APPLICABLE).

PARKER WATER & SANITATION DISTRICT

BEDDING DETAILS

SCALE: NONE | DATE: 2/96

APPROVED: JFN

DISTRICT ENGINEER

2008 REVISION

SHEET 29

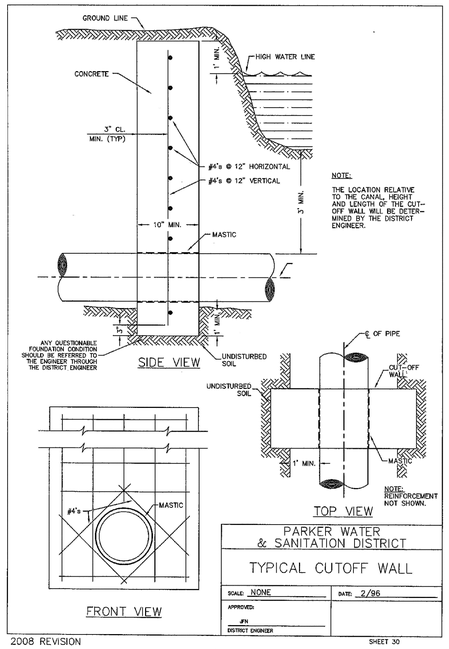

PARKER WATER & SANITATION DISTRICT

TYPICAL CUTOFF WALL

SCALE: NONE | DATE: 2/96

APPROVED: JFN

DISTRICT ENGINEER

2008 REVISION

SHEET 30

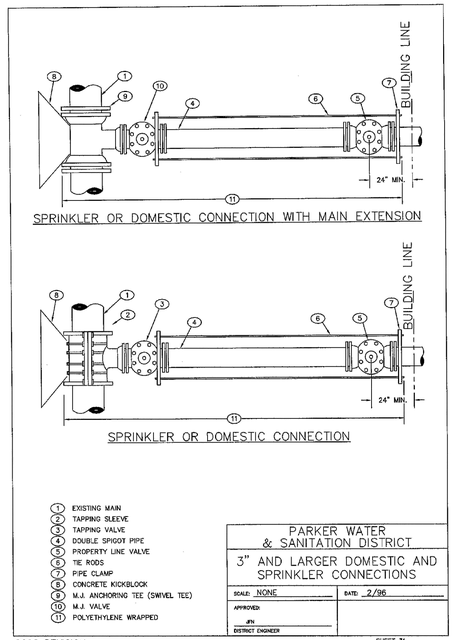

1. EXISTING MAIN
2. TAPPING SLEEVE
3. TAPPING VALVE
4. DOUBLE SPIGOT PIPE
5. PROPERTY LINE VALVE
6. TIE RODS
7. PIPE CLAMP
8. CONCRETE KICKBLOCK
9. M.J. ANCHORING TEE (SWIVEL TEE)
10. M.J. VALVE
11. POLYETHYLENE WRAPPED

PARKER WATER & SANITATION DISTRICT

3" AND LARGER DOMESTIC AND SPRINKLER CONNECTIONS

SCALE: NONE | DATE: 2/96

APPROVED: JFN

DISTRICT ENGINEER

2008 REVISION

SHEET 31

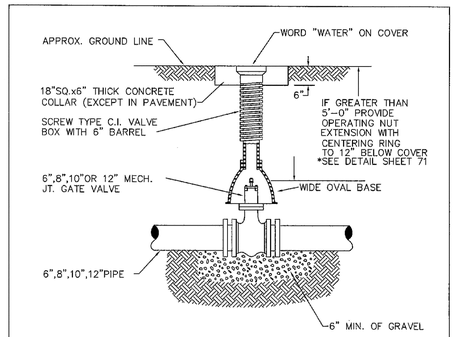

6-INCH VALVE BOXES

Materials:

Valve box parts shall be made from gray cast iron, ASTM A48 Class 20A.

Use of an aluminum alloy as a casting material is not acceptable.

NOTES:

1. ALL C.I. SHALL BE WRAPPED WITH 8 MIL. MIN. THICKNESS POLYETHYLENE.
2. VALVE NUT SHALL BE CENTERED.
3. VALVE BOX SHALL BE PLUMB.

PARKER WATER & SANITATION DISTRICT

VALVE BOX DETAIL

SCALE: NONE | DATE: 2/96

APPROVED: JFN | 5/98 6/99 12/07

DISTRICT ENGINEER

2008 REVISION

SHEET 34

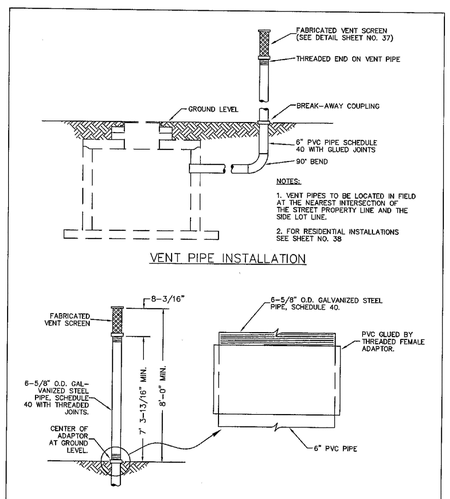

PARKER WATER & SANITATION DISTRICT

VENT PIPE INSTALLATION AND DETAILS

SCALE: NONE | DATE: 2/96

APPROVED: JFN

DISTRICT ENGINEER

2008 REVISION

SHEET 36

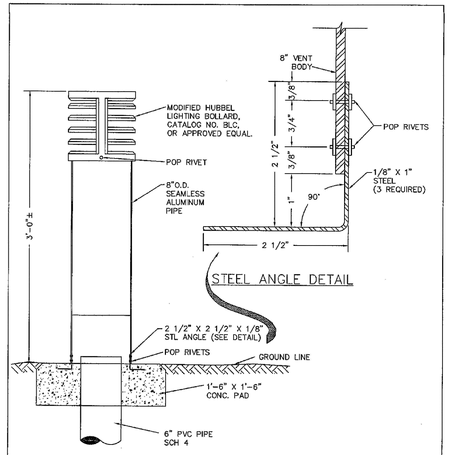

NOTE:
COLOR SHALL BE OLIVE GREEN OR FLAT BLACK TO MATCH SURROUNDINGS.

PARKER WATER & SANITATION DISTRICT

RESIDENTIAL VENT ASSEMBLY

SCALE: NONE | DATE: 2/96

APPROVED: JFN

DISTRICT ENGINEER

2008 REVISION

SHEET 38

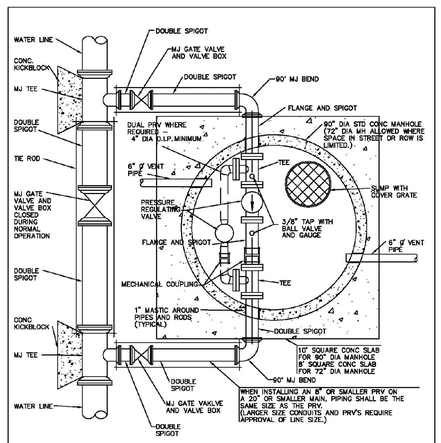

NOTES:

1 - A RECTANGULAR VAULT IS REQUIRED WHERE TELEMETRY OR ELECTRICAL EQUIPMENT IS ANTICIPATED INSIDE THE VAULT.

2 - ACCESS STAIRS WITH DOOR OUTSIDE OF PAVEMENT MAY BE REQUIRED ON STREETS WITH HEAVY TRAFFIC.

3 - FOR ELEVATION VIEW SEE CROSS SECTION DWG SHEET NO. 40

4 - DO NOT PLACE SUMP DIRECTLY UNDER MANHOLE.

5 - POLYETHENE STEPS SHALL BE INSTALLED.

PARKER WATER & SANITATION DISTRICT

PRESSURE REGULATING VALVE MANHOLE INSTALLATION TYPICAL PLAN

SCALE: NONE | DATE: 2/96

APPROVED: JFN | 2/00 3/03

DISTRICT ENGINEER

2008 REVISION

SHEET 39

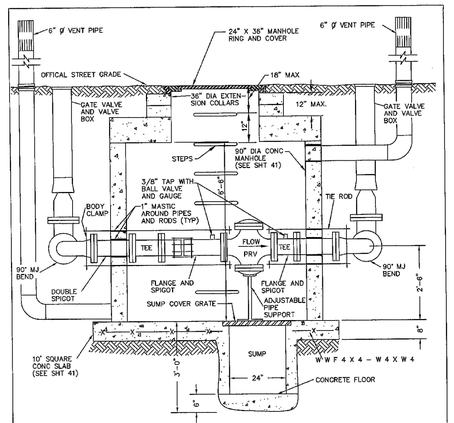

NOTES:

1 - SEE SHT. 41 FOR PLAN VIEW AND ADDITIONAL NOTES.

2 - POLYETHENE STEPS SHALL BE INSTALLED. AND ANY STEPS IN CHIMNEY SECTION SHALL BE INSTALLED AS A HANDHOLD & SHALL NOT IMPEDE ACCESS THRU THE CHIMNEY.

PARKER WATER & SANITATION DISTRICT

PRESSURE REGULATING VALVE MANHOLE INSTALLATION CROSS SECTION

SCALE: NONE | DATE: 2/96

APPROVED: JFN | 4/01 3/03

DISTRICT ENGINEER

2008 REVISION

SHEET 40

CALL 811
TWO WORKING DAYS
BEFORE YOU DIG
UNCC UTILITY NOTIFICATION CENTER OF COLORADO
1-800-922-1987

N:\PROJECTS\HESS RANCH\CAD\ENGINEERING\SHEET SETS\CD\SF10\PARKER WATER AND SANITATION\WATER DETAILS.DWG, LAURAC, 8/23/2017 3:52 PM

No.	Revisions	Date	Init.	Appr.	Date

CVL CONSULTANTS
10333 E. Dry Creek Rd.
Suite 240
Englewood, CO 80112
Tel: (720) 482-9526
Fax: (720) 482-9546

E5X MANAGEMENT
7353 South Alton Way
CENTENNIAL, CO 80112

TRAILS AT CROWFOOT
FILING 10 CONSTRUCTION DRAWINGS
WATER DETAILS

SHEET NUMBER 25

DRAWN BY: JF
CHECKED BY: JJJ
DATE: SEPTEMBER 2017

SCALE: AS SHOWN
FILE NO: 8130283701

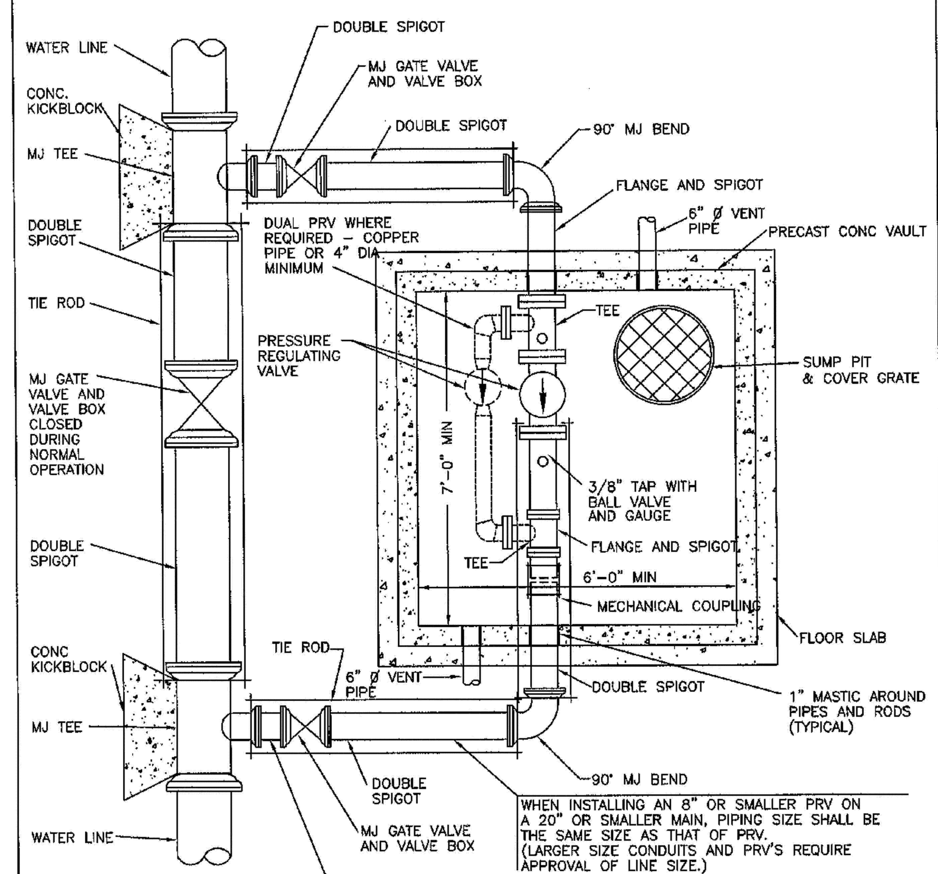

NOTES:

1 – A RECTANGULAR VAULT IS REQUIRED WHERE TELEMETRY OR ELECTRICAL EQUIPMENT INSIDE THE VAULT IS ANTICIPATED.

2 – ACCESS STAIRS WITH DOOR OUTSIDE OF PAVEMENT MAY BE REQUIRED ON STREETS WITH HEAVY TRAFFIC.

3 – FOR ELEVATION VIEW SEE CROSS SECTION DWG SHEET NO. 42.

4 – SUMP PUMP AND VENT FAN REQUIRED IN VAULTS WITH ELECTRICAL OR TELEMETRY EQUIPMENT.

5 – POLYETHENE STEPS SHALL BE INSTALLED.

PARKER WATER & SANITATION DISTRICT

PRESSURE REGULATING VALVE RECTANGULAR VAULT TYPICAL PLAN

SCALE: NONE — DATE: 2/96

APPROVED: JFN — 2/00, 3/03

DISTRICT ENGINEER

2008 REVISION — SHEET 41

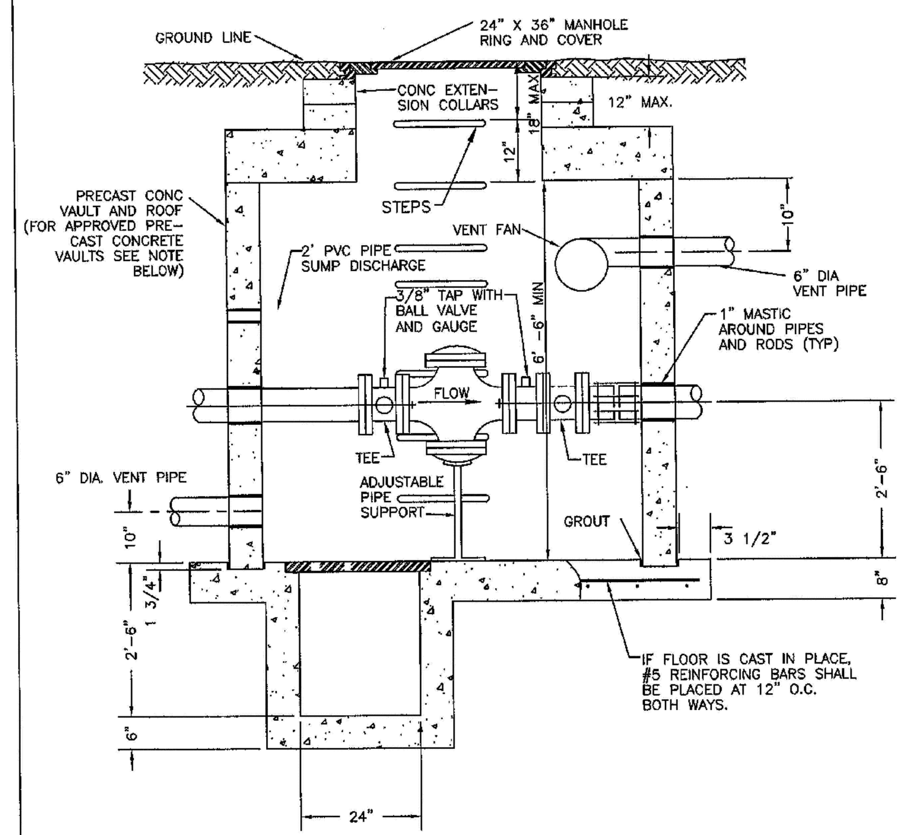

NOTES:

1 – APPROVED PRECAST CONCRETE VAULTS ARCO CONC INC – 10' X 10' X 7', 7080M, 7080 – 12 ADAMS CITY MFG – 11' X 12', 6' X 8'-6", 7' X 12'-6"

2 – A PERMIT IS REQUIRED FOR SUMP PUMP DISCHARGE TO STORM SEWERS.

3 – SEE SHEET 41 FOR PLAN VIEW AND ADDITIONAL NOTES.

4 – POLYETHENE STEPS SHALL BE INSTALLED.

PARKER WATER & SANITATION DISTRICT

PRESSURE REGULATING VALVE RECTANGULAR VAULT CROSS SECTION

SCALE: NONE — DATE: 2/96

APPROVED: JFN — 4/01, 3/03

DISTRICT ENGINEER

2008 REVISION — SHEET 42

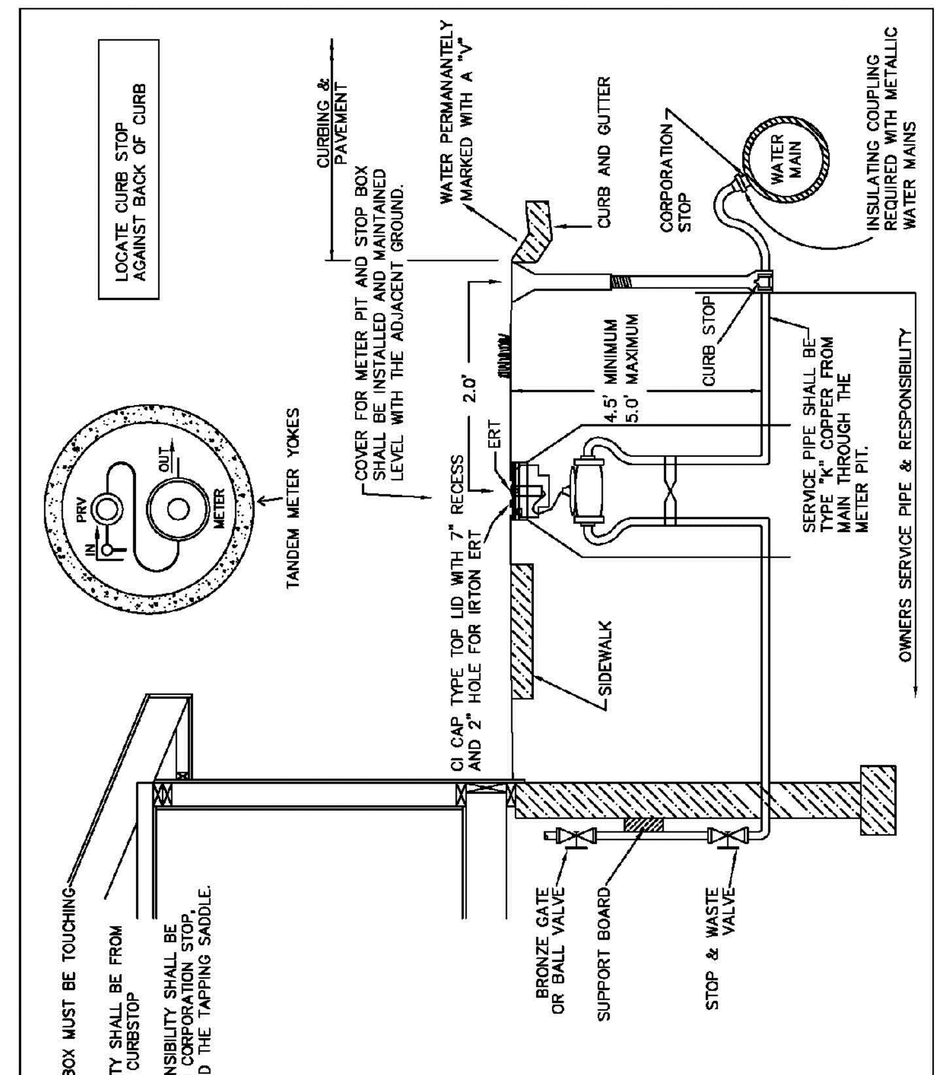

NOTES

1 – PLACEMENT OF STOP BOX MUST BE TOUCHING BACK OF CURB.

2 – OWNER'S RESPONSIBILITY SHALL BE FROM THE BUILDING TO THE CURBSTOP

3 – THE DISTRICT'S RESPONSIBILITY SHALL BE THE WATER MAIN, THE CORPORATION STOP, TO THE CURBSTOP AND THE TAPPING SADDLE.

PARKER WATER & SANITATION DISTRICT

SERVICE LINE, STOP BOX AND OUTSIDE METER INSTALLATION

SCALE: NONE — DATE: 2/96

APPROVED: JFN — 2/00 5/05, 4/01 1/12, 01/02, 12/03

DISTRICT ENGINEER

2008 REVISION — SHEET 44

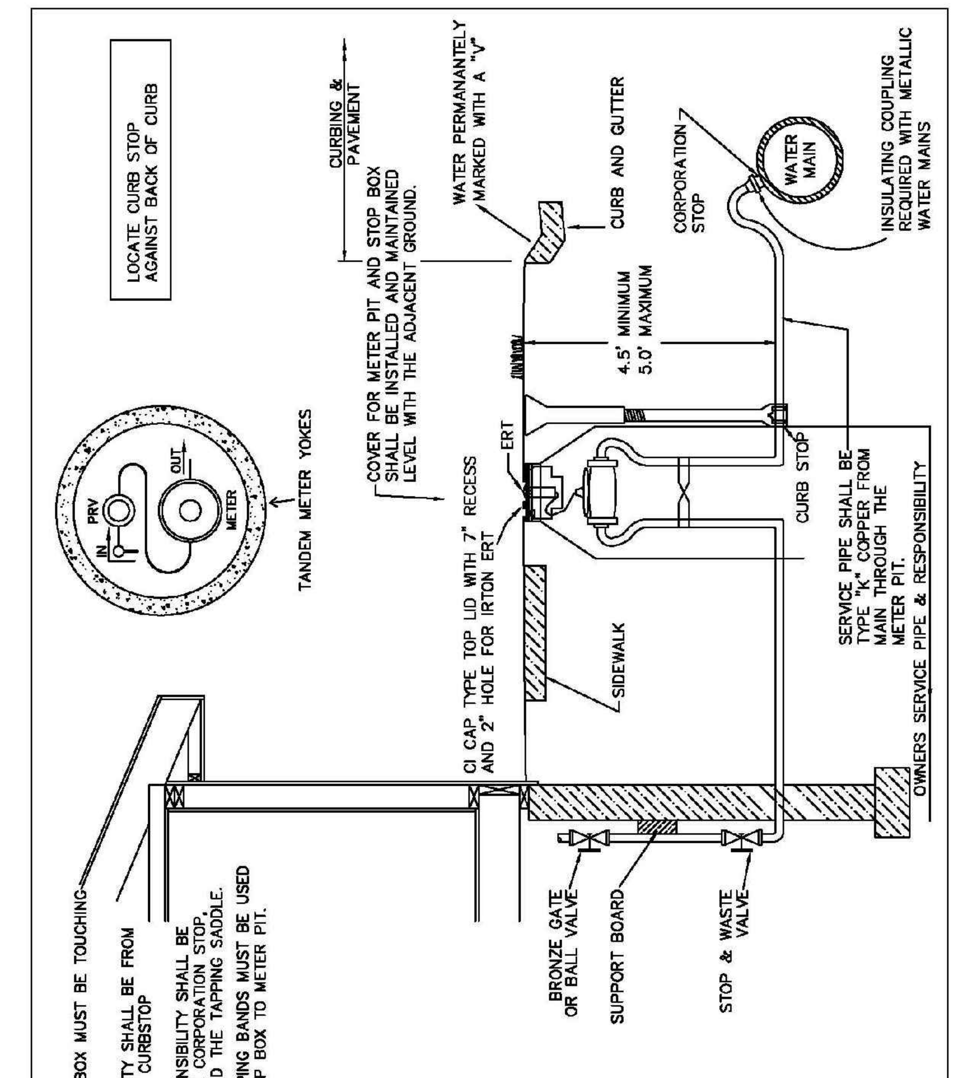

NOTES

1 – PLACEMENT OF STOP BOX MUST BE TOUCHING EDGE OF METER PIT.

2 – OWNER'S RESPONSIBILITY SHALL BE FROM THE BUILDING TO THE CURBSTOP

3 – THE DISTRICT'S RESPONSIBILITY SHALL BE THE WATER MAIN, THE CORPORATION STOP, TO THE CURBSTOP AND THE TAPPING SADDLE.

4 – TWO 1" STEEL STRAPPING BANDS MUST BE USED TO SECURE CURB STOP BOX TO METER PIT.

PARKER WATER & SANITATION DISTRICT

SERVICE LINE, STOP BOX AND OUTSIDE METER INSTALLATION

SCALE: NONE — DATE: 2/96

APPROVED: JFN — 2/00 5/05, 4/01 1/12, 01/02, 12/03

DISTRICT ENGINEER

2008 REVISION — SHEET 44B

1. NOT FOR INSTALLATION IN ROADWAYS, PARKING AREAS OR DRIVEWAYS.
2. IF SURFACE IS NOT TO FINAL GRADE AT TIME OF INSTALLATION OF METER, OWNER MUST RAISE OR LOWER PIT WHEN SURFACE IS GRADED.
3. METER SETTING MUST BE INSPECTED BY THE DISTRICT BEFORE BACKFILLING.
4. LOCATION OF METER TO BE ESTABLISHED BY A DISTRICT REPRESENTATIVE.
5. NO CONCRETE FLOOR TO BE LAID IN METER PIT.
6. METER PIT SHALL BE CONSTRUCTED OF FOUR 12", OR ONE 12" AND ONE 36" RINGS. WALLS SHALL BE 2" THICK.
7. 8" FROM BOTTOM OF BONNET TO YOKE SPREAD FOR METER
8. ADJUSTMENT RINGS SHALL BE 2", 3" 4" OR 6" IN HEIGHT AND SHALL BE INSERTED BETWEEN THE TOP TWO RINGS.
9. NO CONNECTIONS OR CHANGES IN PIPE DIAMETER SHALL BE MADE IN THE METER PIT OR IN THE DISTANCE OF FIVE FEET BEYOND THE METER PIT WALL ON THE OUTLET SIDE.
10. LAWN SPRINKLER CONNECTION SHALL BE A MINIMUM OF FIVE FEET FROM THE METER PIT WALL ON THE OUTLET SIDE.
11. A COPY OF THE PERMIT CARD MUST BE ONSITE AT TIME OF METER SET.

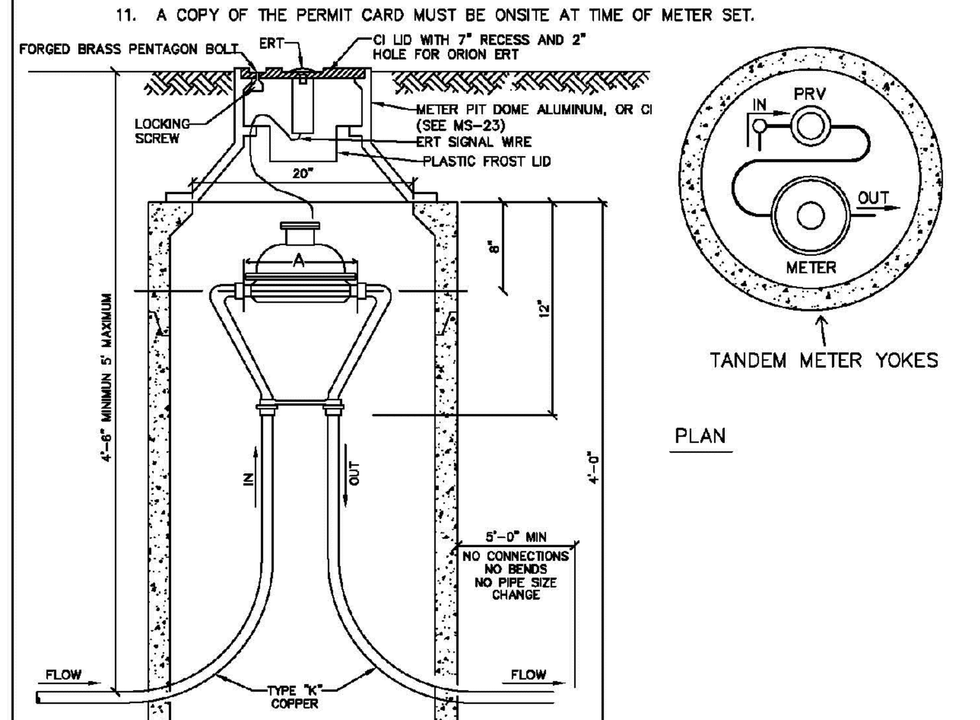

METER SIZE	A
5/8" X 3/4"	7 1/2"
1"	11 1/16"

PARKER WATER & SANITATION DISTRICT

ALL OUTSIDE SETTINGS FOR 5/8" X 3/4 & 1" METERS

SCALE: NONE — DATE: 2/96

APPROVED: JFN — 01/04, 06/05, 01/08, 01/12

DISTRICT ENGINEER

2008 REVISION — SHEET 45

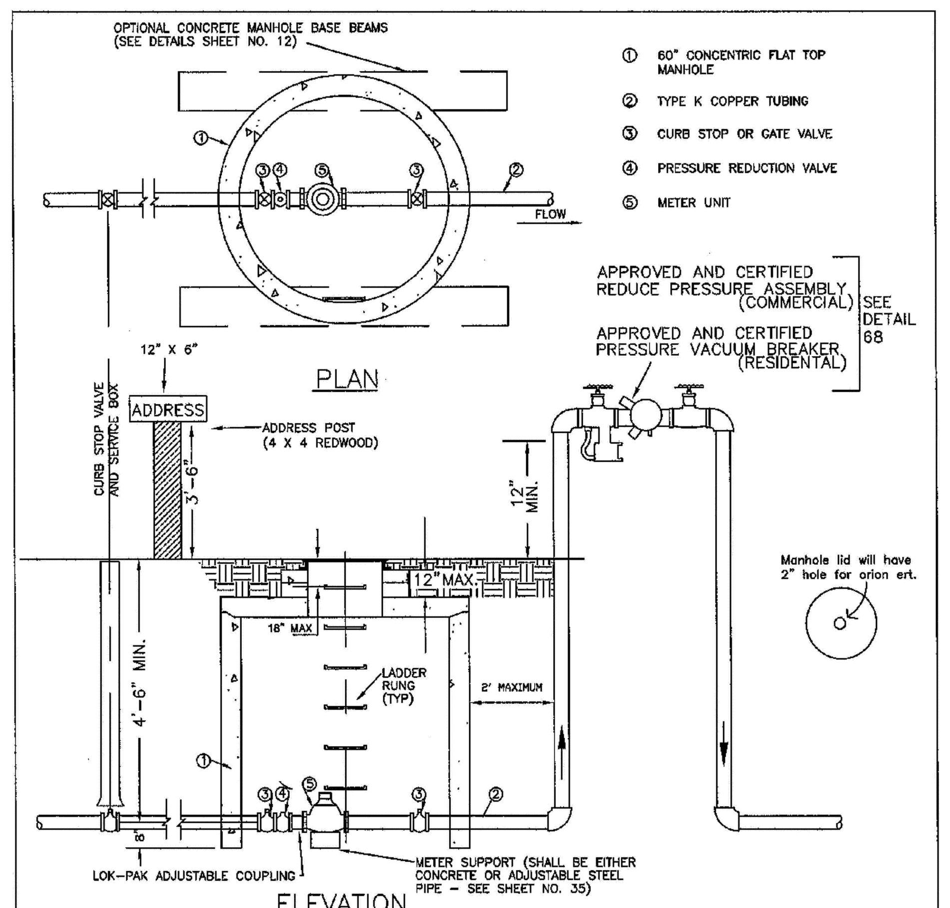

NOTES:

1 – MANHOLE BASE BEAMS SHALL BE REQUIRED FOR INSTALLATIONS IN DRIVEWAYS, OR PARKING AREAS.

2 – A 60" DIA. MANHOLE PIT WILL ACCOMODATE 1 1/2" AND 2" SPLIT BASE METERS.

3 – JOINTS INSIDE METER VAULT SHALL BE EITHER THREADED OR SOLDERED WITH 95–5 TINANTIMONY SOLDER.

4 – SEE SECTION 10.9, WATER SYSTEM SPECIFICATIONS FOR GENERAL METER NOTES.

5 – NO CONCRETE TO BE LAID IN FLOOR OF METER M.H.

6 – METER SHALL BE FLANGED WITH BRASS COMPANION FLANGES.

7 – NO CONNECTIONS OR CHANGES IN PIPE DIAMETER SHALL BE MADE IN THE METER PIT OR IN THE DISTANCE OF FIVE FEET BEYOND THE METER PIT ON THE OUTLET SIDE.

8 – LADDER RUNGS SHALL BE ON OPPOSITE SIDE OF BYPASS.

9 – VALVE MUST BE CENTERED IN STOP BOX. NO DEBRIS OR STANDING WATER IN STOP BOX.

10 – PLACEMENT OF STOP BOX MUST BE TOUCHING BACK OF CURB

11 – SEE SHEET 75 FOR MANHOLE RING AND COVER DETAIL

12 – BACKFLOW MUST BE INSTALLED PRIOR TO SETTING METER

13 – BADGER METER USED BY DISTRICT

METER	YOKE DISTANCE
1.5"	13.25"
2"	17.25" WITH ADJUSTABLE FLANGE FOR GASKET

IRRIGATION ONLY

NOT TO BE USED IN COMMERCIAL WITHOUT EXPRESS PERMISSION OF THE DISTRICT MANAGER.

PARKER WATER & SANITATION DISTRICT

OUTSIDE SETTING FOR 1 1/2" & 2" METER FOR IRRIGATION

SCALE: NONE — DATE: 2/96

APPROVED: JFN — 1/04, 06/05

DISTRICT ENGINEER

2008 REVISION — SHEET 49

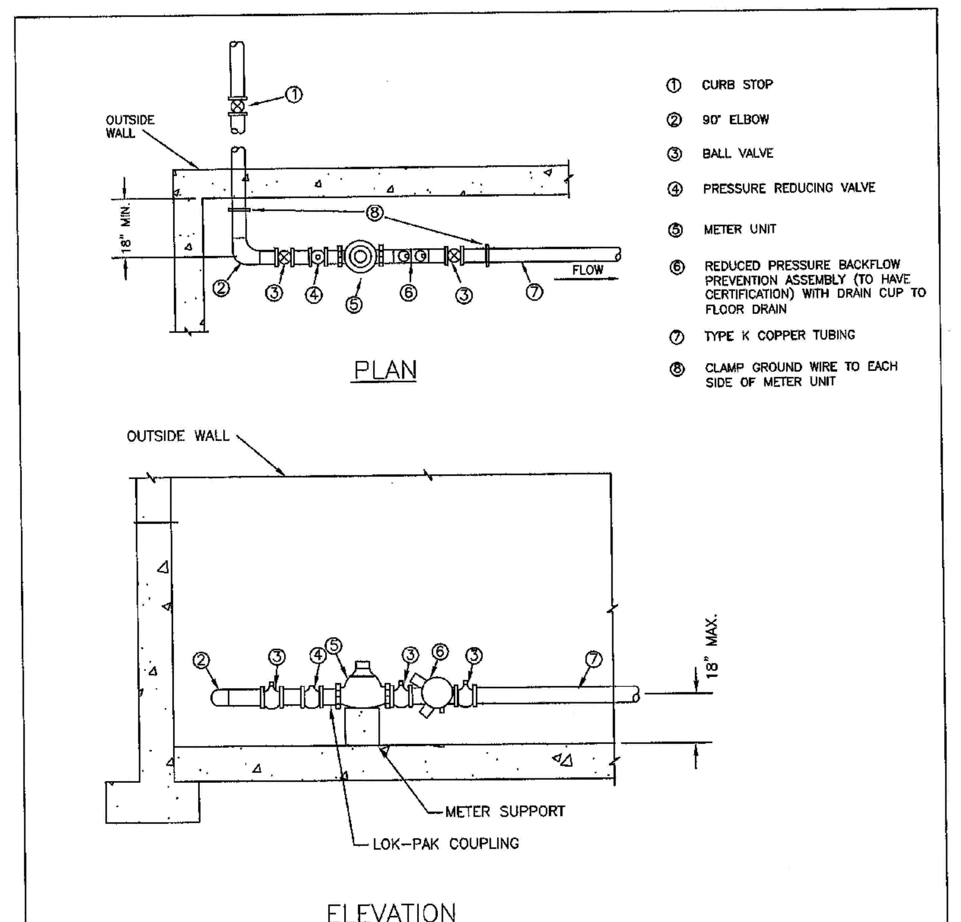

NOTES

1 – PIPE JOINT SHALL BE THREADED OR SOLDERED WITH SILVER SOLDER.

2 – INSTALLATION MUST ALLOW ACCESS FOR MAINTENANCE AND BE PROTECTED FROM FREEZING.

3 – SEE SECTION 10.9, WATER SYSTEM SPECIFICATIONS FOR GENERAL METER NOTES.

4 – COMPANION FLANGES SHALL BE BRASS.

5 – METER SUPPORT SHALL BE EITHER CONCRETE OR ADJ. STEEL PIPE (SEE SHEET NO. 34)

6 – 1.0' MINIMUM CLEARANCE AROUND BACKFLOW DEVICE

7 – FLOOR DRAIN TO BE 2X PIPE SIZE

*8 – INSIDE METER WITH CHECK VALVE ONLY INSTALLED WITH EXPRESSED WRITTEN PERMISSIN OF THE DISTRICT

METER	YOKE DISTANCE
1.5"	13.25"
2"	17.25" WITH ADJUSTABLE FLANGE FOR GASKET

PARKER WATER & SANITATION DISTRICT

INSIDE SETTING FOR $1\frac{1}{2}$" & 2" METER WITH CHECK VALVE

SCALE: NONE — DATE: 2/96

APPROVED: JFN — 8/99 01/02, 2/00 06/05, 4/01 07/06

DISTRICT ENGINEER

2008 REVISION — SHEET 51

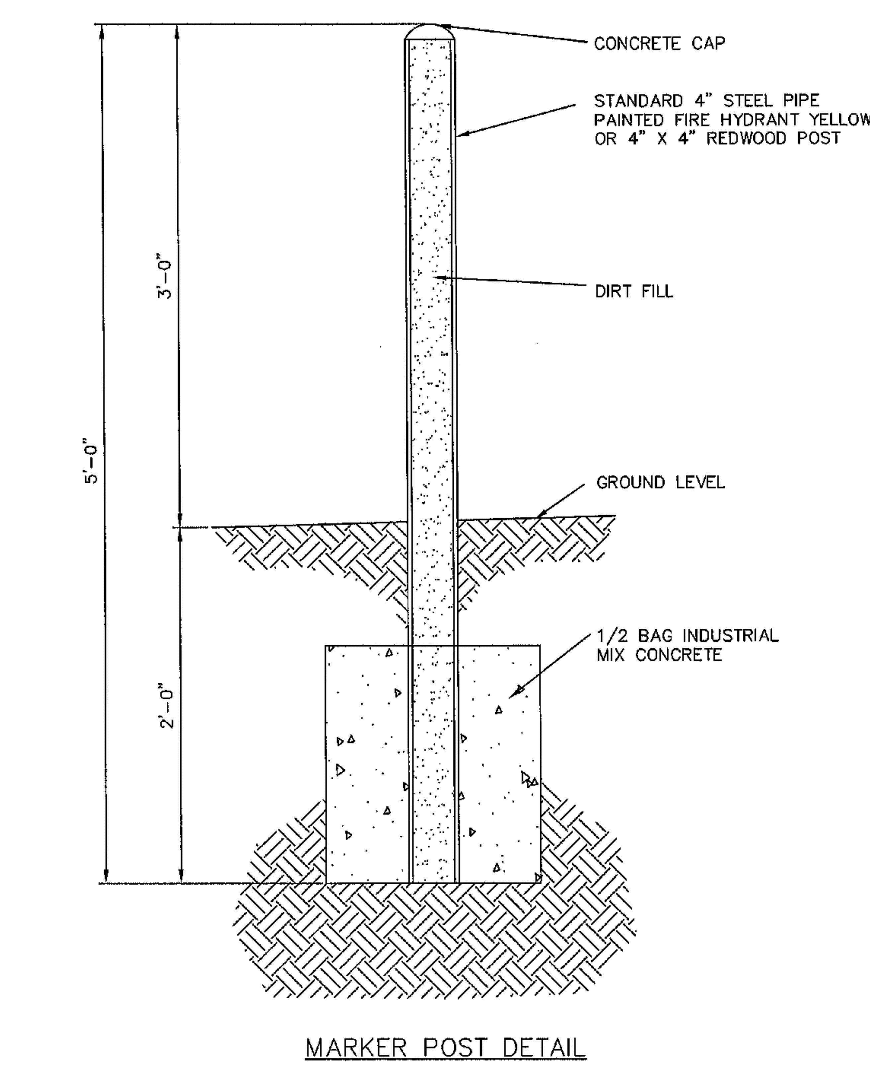

MARKER POST DETAIL

STEEL PIPE
STENCILED IDENTIFICATION MARKS ON POSTS SHALL FACE THE APPURTENANCE, WITH 2" STENCILS INDICATING TYPE OF APPURTENANCE (MH, 12" VALVE, ETC.) AND THE DISTANCE IN FEET AND INCHES FROM POST.

REDWOOD POST
ROUTER LETTERS AND NUMBERS INTO POST. PAINT LETTERS AND NUMBERS BLACK.

PARKER WATER AND SANITATION DISTRICT

MARKER POST

SCALE: NONE — DATE: 2/96

APPROVED: JFN — 2/00, 4/01, 12/07

DISTRICT ENGINEER

2008 REVISION — SHEET 58

N:\PROJECTS\HESS RANCH\CAD\ENGINEERING\SHEET SETS\CD'S\F10\PARKER WATER AND SANITATION\WATER DETAILS.DWG, LAURAC, 8/23/2017 3:52 PM

CALL 811
TWO WORKING DAYS
BEFORE YOU DIG
1-800-922-1987
UNCC UTILITY NOTIFICATION CENTER OF COLORADO

No.	Revisions	Date	Init.	Appr.	Date

CVL CONSULTANTS
10333 E. Dry Creek Rd.
Suite 240
Englewood, CO 80112
Tel: (720) 482-9526
Fax: (720) 482-9546

E5X MANAGEMENT
7353 South Alton Way
CENTENNIAL, CO 80112

TRAILS AT CROWFOOT
FILING 10 CONSTRUCTION DRAWINGS
WATER DETAILS

SCALE: AS SHOWN
FILE NO: 8130283701
DRAWN BY: JF
CHECKED BY: JJJ
DATE: SEPTEMBER 2017
SHEET NUMBER 26

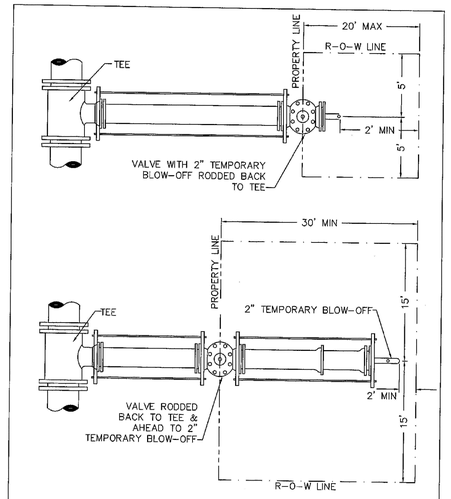

PARKER WATER & SANITATION DISTRICT

STUB-OUT CONFIGURATIONS

SCALE: NONE | DATE: 2/96

APPROVED: JFN DISTRICT ENGINEER

2008 REVISION

SHEET 59

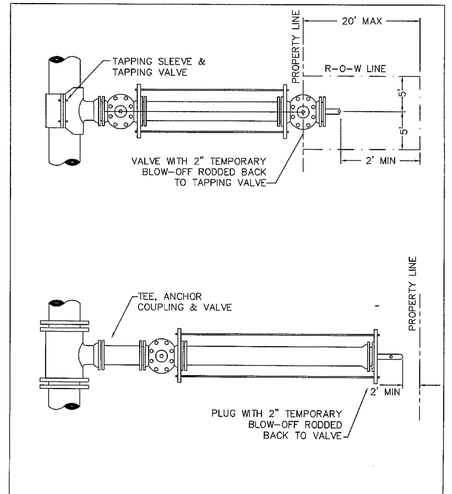

PARKER WATER & SANITATION DISTRICT

STUB-OUT CONFIGURATIONS

SCALE: NONE | DATE: 2/96

APPROVED: JFN DISTRICT ENGINEER

2008 REVISION

SHEET 60

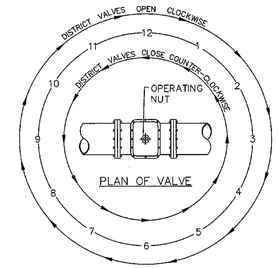

NOTE:
NORMALLY VALVES WITH A RED OPERATING NUT INDICATE A STANDARD DENVER VALVE.

VALVE OPENING & CLOSING PROCEDURE

PARKER WATER & SANITATION DISTRICT

VALVE OPERATION

SCALE: NONE | DATE: 2/96

APPROVED: JFN DISTRICT ENGINEER

2008 REVISION

SHEET 61

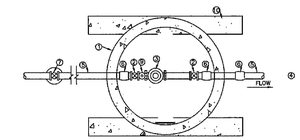

PLAN

1. 60" DIA. CONCRETE MANHOLE
2. CURB STOP VALVE
3. METER UNIT
4. APPROVED AND CERTIFIED REDUCED PRESSURE BACKFLOW PREVENTER INSTALLED DIRECTLY AFTER MANHOLE
5. TYPE K COPPER TUBING
6. SILVER-SOLDERED COPPER TO IRON COUPLING OR D.W.D. APPOVED EQUAL
7. CURB STOP VALVE AND SERVICE BOX MUST BE CENTERED AND FREE OF DEBRIS
8. FLANGE TO MATCH METER UNIT
9. APPROVED PRESSURE REDUCTION VALVE
10. OPTIONAL CONCRETE MANHOLE BASE BEAMS

NOTES:

1. DASHED LINES REPRESENT THE 2" METER PIPING PLAN
2. OUTSIDE METER SETTING ONLY ALLOWED WITH EXPRESSED WRITTEN PERMISSION OF THE DISTRICT.
3. SILVER SOLDER ALL JOINTS.

PARKER WATER & SANITATION DISTRICT

OUTSIDE SETTING FOR 1 1/2" & 2" METER

SCALE: NONE | DATE: 2/96

APPROVED: JFN DISTRICT ENGINEER | 1/04 06/05

2008 REVISION

SHEET 62

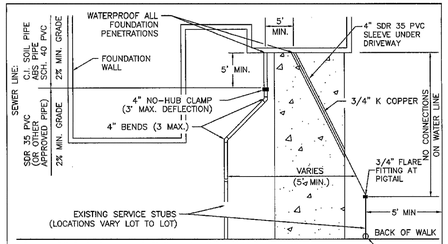

TYPICAL SERVICES PLAN VIEW

NTS

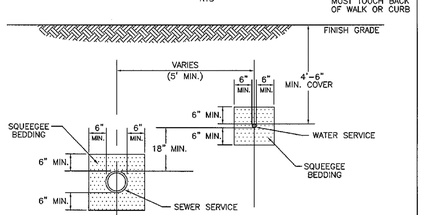

TYPICAL SERVICES SECTION

NTS

NOTE

SEE SHEET 67 OF 68 FOR DISTRICT POLICIES AND INSTALLATION NOTES.

PARKER WATER & SANITATION DISTRICT

TYPICAL WATER SERVICES

SCALE: NONE | DATE: 2/96

APPROVED: JFN DISTRICT ENGINEER | 1/04 06/05 12/07

2008 REVISION

SHEET 66

INSPECTION POLICY:

1. ALL SERVICE INSPECTIONS MUST BE SCHEDULED WITH THE DISTRICT OFFICE (303)841-2058 AT LEAST 24 HOURS IN ADVANCE OF THE REQUESTED INSPECTION.
2. SERVICE INSPECTIONS WILL OCCUR BETWEEN 1:00 P.M. AND 3:00 P.M. SPECIFIC INSPECTION TIMES ARE NOT AVAILABLE.
3. IF THE CONTRACTOR IS NOT READY FOR INSPECTION WHEN THE INSPECTOR ARRIVES AT THE SITE OR SERVICE FAILS, A RE-INSPECTION WILL HAVE TO BE SCHEDULED IN ACCORDANCE WITH NOTES 1 AND 2 ABOVE AND A $60 RE-INSPECTION FEE CHARGED.
4. SHOULD THE SERVICE LINES BE DAMAGED BY LATER CONSTRUCTION, AN INSPECTION OF THE REPAIR WILL BE REQUIRED IN ACCORDANCE WITH NOTES 1 AND 2 ABOVE.
5. THE CONTRACTOR SHALL LEAVE ALL PIPE AND FITTINGS EXPOSED FOR THE INSPECTOR TO OBSERVE. INSPECTORS WILL NOT ENTER ANY EXCAVATIONS TO CHECK MATERIALS. THE TOP LAYER OF BEDDING CAN BE ADDED AFTER THE INSPECTION HAS BEEN COMPLETED.
6. ALL EXCAVATIONS SHALL BE IN ACCORDANCE WITH OSHA STANDARDS.
7. LOTS WITHOUT BULDING ADDRESSES OR LOT AND BLOCK NUMBERS BEFORE DISTRICT INSPECTION OR METER SET WILL FAIL AUTOMATICALLY.
8. CONTRACTOR MUST BE PRESSENT AT TIME OF INSPECTION.

INSTALLATION NOTES:

WATER

1. ACCEPTABLE PIPE MATERIALS SHALL BE K-COPPER TUBING. (3/4" MIN.)
2. APPROVED BEDDING TO BE SQUEEGEE.
3. ONLY ONE COUPLING WILL BE ALLOWED BETWEEN THE STUB-IN AND BUILDING. A COUPLING MAY BE EITHER FLARED OR SILVER-SOLDERED. COMPRESSION COUPLINGS WILL NOT BE ALLOWED. MOVED CURB BOXES MUST BE INSPECTED BY PWSD PRIOR TO BURIAL.
4. A WATER SERVICE WHICH CROSSES A SEWER SERVICE CAN DO SO ONLY AT A 90°± ANGLE MAXIMUM, 45° ANGLE MINIMUM. WATER SERVICES SHALL BE LOCATED A MINIMUM OF 18" ABOVE SEWER SERVICE.
5. WATER SERVICE FOUNDATION PENETRATIONS SHALL BE WATERPROOFED USING MASTIC OR OTHER APPROVED METHOD, CRAW SPACE REQUIRES CONTINOUS COPPER WITH A 1' BURY.
6. STOPBOX MUST BE PLUMB AND CENTERED OVER NUT AT THE BACK OF CURB, AND MUST BE SET AT OR SLIGHTLY ABOVE FINISHED GRADE.
7. STOPBOXES MUST BE SET AT BACK OF SIDEWALK OR CURB (MUST BE TOUCHING).
8. NO CRAWLSPACE MOUNTED METERS ALLOWED.
9. WATERLINE MUST BE ATTACHED TO A SUPPORT BOARD THAT IS MOUNTED TO THE WALL.
10. NO VOIDS ALLOWED UNDER WATERLINES FROM STOP BOX TO FOUNDATION.
11. CURBSTOP BOXES CANNOT BE IN DRIVEWAYS.
12. WATERLINES PASSING UNDER DRIVEWAYS NEED TO BE SLEEVED IN 4" P.V.C. AND HAVE EXPRESS PERMISSION OF THE DISTRICT.
13. YOKES SHOULD BE MOUNTED NO GREATER THAN 6 INCHES ABOVE BOTTOM SHUTTOFF. EACH SERVICE MUST INCLUDE A STOP AND WASTE VALVE AND A PRESSURE REDUCING VALVE LOCATED WITHIN THE ABOVE REFERENCED 6 INCH SPACE.
14. NO SPLICES OR FLARED COUPLINGS ALLOWED ON SERVICES LARGER THAN 3/4". SILVER SOLDIERED JOINTS MUST BE USED IN MOVING STOPBOXES ON SERVICES LARGER THAN 3/4". SILVER SOLDIERED JOINTS MUST BE INSPECTED BY PWSD PRIOR TO BURIAL. FLARED COUPLINGS WILL BE ALLOWED ON ALL SERVICES 3/4" AND SMALLER.
15. ONLY 3/4" (JUMPER OR CHEATER) PIPES (RESIDENCES) ARE ALLOWED. (JUMPER OR CHEATER) PIPES WILL BE REMOVED PRIOR TO METER SET DATE.
16. ALL SERVICES WILL BE PERMANANTELY MARKED ON CURB FACE AS FOLLOWS: "X" FOR SANITARY SEWER SERVICE "V" FOR WATER SERVICES
17. CONTRACTOR MUST BE PRESENT AT TIME OF THE INSPECTION

PARKER WATER & SANITATION DISTRICT

DISTRICT POLICIES & INSTALLATION NOTES FOR WATER SERVICES

SCALE: NONE | DATE: 2/96

APPROVED: JFN DISTRICT ENGINEER | 1/04

2008 REVISION

SHEET 67

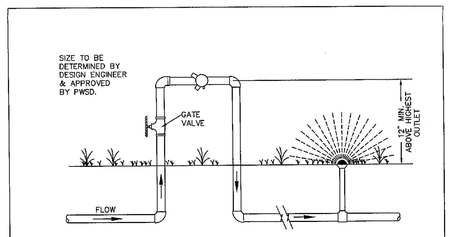

REDUCED PRESSURE BACKFLOW

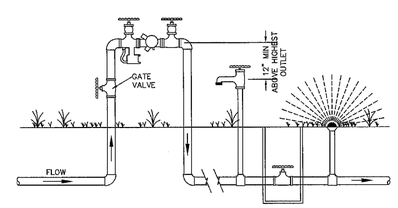

REDUCED PRESSURE BACKFLOW ON IRRIGATION SYSTEM

* NOTE:
ALL IRRIGATION SYSTEMS MUST BE CONNECTED DOWN STREAM OF METER.

PARKER WATER & SANITATION DISTRICT

REDUCED PRESSURE BACKFLOW

SCALE: NONE | DATE: 2/96

APPROVED: JFN DISTRICT ENGINEER | 2004 06/05

2008 REVISION

SHEET 68

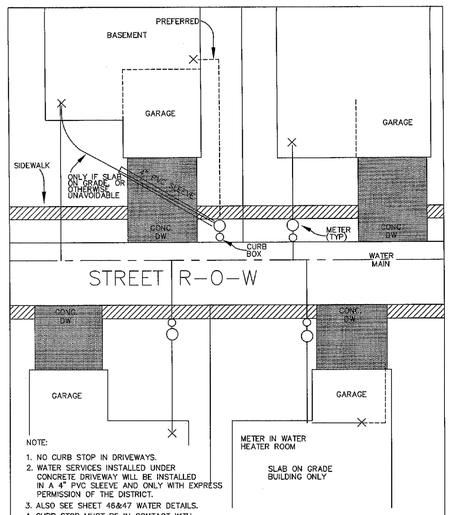

NOTE:

1. NO CURB STOP IN DRIVEWAYS.
2. WATER SERVICES INSTALLED UNDER CONCRETE DRIVEWAY WILL BE INSTALLED IN A 4" PVC SLEEVE AND ONLY WITH EXPRESS PERMISSION OF THE DISTRICT.
3. ALSO SEE SHEET 46&47 WATER DETAILS.
4. CURB STOP MUST BE IN CONTACT WITH BACK OF WALK.
5. WATERLINE MUST BE CAULKED AT ENTRY THROUGH CONCRETE.
6. WATER LINE THROUGH CRAWL SPACE MUST BE CONTINOUS COPPER AND AT A 1' MIN. BURY.

PARKER WATER & SANITATION DISTRICT

METER/REMOTE LOCATIONS

SCALE: NONE | DATE: 4/98

APPROVED: JFN DISTRICT ENGINEER | 1/04 06/05

2008 REVISION

SHEET 69

CALL 811
TWO WORKING DAYS
BEFORE YOU DIG
1-800-922-1987
UNCC UTILITY NOTIFICATION CENTER OF COLORADO

N:\PROJECTS\HESS RANCH\CAD\ENGINEERING\SHEET SETS\CD\SF10\PARKER WATER AND SANITATION\WATER DETAILS.DWG, LAURAC, 8/23/2017 3:52 PM

No.	Revisions	Date	Init.	Appr.	Date

CVL CONSULTANTS
10333 E. Dry Creek Rd.
Suite 240
Englewood, CO 80112
Tel: (720) 482-9526
Fax: (720) 482-9546

E5X MANAGEMENT
7353 South Alton Way
CENTENNIAL, CO 80112

TRAILS AT CROWFOOT
FILING 10 CONSTRUCTION DRAWINGS
WATER DETAILS

SCALE: AS SHOWN
FILE NO: 8130283701
DRAWN BY: JF
CHECKED BY: JJJ
DATE: SEPTEMBER 2017
SHEET NUMBER 27

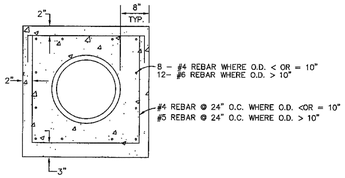

TYPICAL SECTION

NTS

NOTES:
1. ALL CONCRETE SHALL HAVE A 28 DAY STRENGTH OF 3,000 PSI USING TYPE I PORTLAND CEMENT AND 3/4" AGGREGATE. ALL CONCRETE SHALL HAVE 5–7% ENTRAINED AIR CONTENT AND A MAXIMUM SLUMP OF 4".
2. ALL REINFORCEMENT SHALL CONFORM TO ASTM A615,GRADE 60.
3. ALL REINFORCEMENT SHALL HAVE 2" MIN. CONCRETE COVER.
4. THE SUBGRADE SHALL BE COMPACTED TO 95% OF THE MAXIMUM STANDARD PROCTOR DENSITY PRIOR TO FORMING THE STRUCTURE.

PARKER WATER & SANITATION DISTRICT	
WATERLINE ENCASEMENT	
SCALE: NONE	DATE: 5/98
APPROVED: JFN	
DISTRICT ENGINEER	

2008 REVISION

SHEET 70

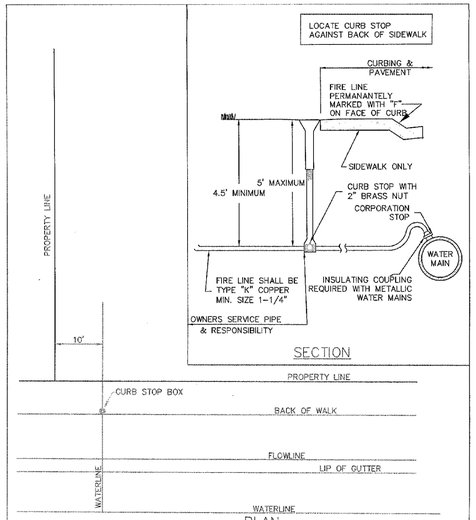

NOTES:
1. AN "F" WILL BE PERMANENTELY MARKED ON CURB FACE OVER FIRE LINE.
2. DOMESTIC WATER SERVICE SHALL BE INSTALLED A MINIMUM OF FIVE (5) FEET FROM THE FIRE LINE.
3. SANITARY SEWER SERVICE SHALL BE INSTALLED A MINIMUM OF TEN (10) FEET FROM THE WATER SERVICE (EITHER DOMESTIC OR FIRE LINE).

PARKER WATER & SANITATION DISTRICT	
RESIDENTIAL FIRE LINES	
SCALE: NONE	DATE: 6/99
APPROVED: RJG	2/00 06/05 12/07
DISTRICT ENGINEER	

2008 REVISION

SHEET 73

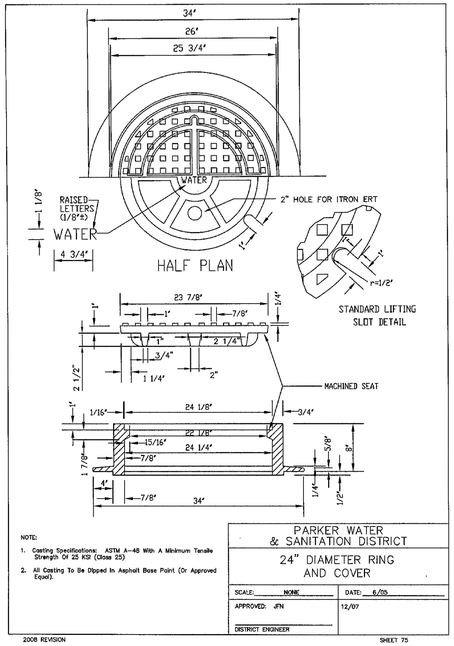

NOTE:
1. Casting Specifications: ASTM A-48 With A Minimum Tensile Strength Of 25 KSI (Class 25)
2. All Casting To Be Dipped In Asphalt Base Paint (Or Approved Equal).

PARKER WATER & SANITATION DISTRICT	
24" DIAMETER RING AND COVER	
SCALE: NONE	DATE: 6/05
APPROVED: JFN	12/07
DISTRICT ENGINEER	

2008 REVISION

SHEET 75

CALL 811
TWO WORKING DAYS
BEFORE YOU DIG
1-800-922-1987
UNCC
UTILITY NOTIFICATION CENTER OF COLORADO

N:\PROJECTS\HESS RANCH\CAD\ENGINEERING\SHEET SETS\CD'S\F10\PARKER WATER AND SANITATION\WATER DETAILS.DWG, LAURAC, 8/23/2017 3:52 PM

No.	Revisions	Date	Init.	Appr.	Date

CVL CONSULTANTS
10333 E. Dry Creek Rd.
Suite 240
Englewood, CO 80112
Tel: (720) 482-9526
Fax: (720) 482-9546

E5X MANAGEMENT
7353 South Alton Way
CENTENNIAL, CO 80112

TRAILS AT CROWFOOT
FILING 10 CONSTRUCTION DRAWINGS
WATER DETAILS

SHEET NUMBER	DRAWN BY: JF	SCALE:	AS SHOWN
28	CHECKED BY: JJJ	FILE NO:	8130283701
	DATE: SEPTEMBER 2017		