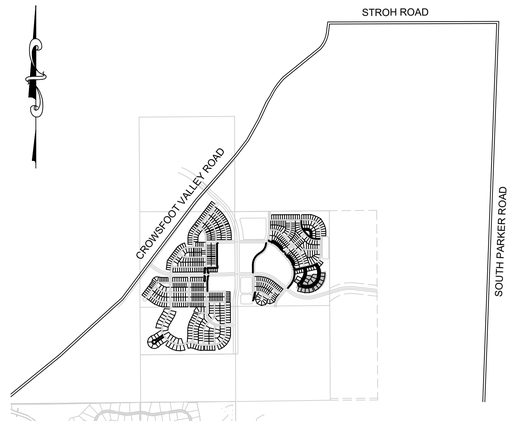
TRAILS AT CROWFOOT FILING 12

PARKER WATER AND SANITATION CONSTRUCTION PLANS

SECTIONS 4, 8, AND 9 TOWNSHIP 7 SOUTH, RANGE 66 WEST OF THE SIXTH PRINCIPAL MERIDIAN COUNTY OF DOUGLAS, STATE OF COLORADO

Sheet List Table	
Sheet Number	Sheet Title
1	COVER SHEET
2	PARKER WATER AND SANITATION NOTES
3	AREA UTILITY PLAN
4	SANITARY P&P BEEBALM LOOP
5	SANITARY P&P BEEBALM LOOP
6	WATER P&P BEEBALM LOOP
7	WATER P&P BEEBALM LOOP
8	SANITARY SEWER DETAIL
9	SANITARY SEWER DETAIL
10	SANITARY SEWER DETAIL
11	WATER DETAILS
12	WATER DETAILS
13	WATER DETAILS
14	WATER DETAILS
15	WATER DETAILS
16	WATER DETAILS
17	WATER DETAILS



VICINITY MAP
SCALE: 1" = 2000'

MATERIALS LIST		
DESCRIPTION	QUANTITY	UNIT
8" SEWER (PVC)	1,266	L.F.
4' DIA. MANHOLE	9	EA.
4" SEWER SERVICE	18	EA.
CONNNECTION TO EXISTING MAIN	1	EA.
6" WATERPIPE (DIP)	40	L.F.
8" WATERPIPE (PVC)	1,494	L.F.
6" GATE VALVE	2	E.A.
8" GATE VALVE	2	EA.
8" MISC. FITTINGS	14	EA.
2" BLOW OFF VALVE (8" LINE-LOW POINT)	1	EA.
FIRE HYDRANT WITH 6" LEAD	2	EA.
DOMESTIC WATER SERVICE	18	EA.
CONNECTION TO EXISTING MAIN	2	EA.

FIRE DEPARTMENT APPROVAL

ALL FIRE HYDRANTS SHALL BE INSTALLED ACCORDING TO WATER UTILITY STANDARDS. THE NUMBER AND LOCATIONS OF THE FIRE HYDRANTS AS SHOWN ON THE OVERALL UTILITY PLAN ARE CORRECT AS SPECIFIED BY THE TOWN OF PARKER, COMMUNITY DEVELOPMENT DEPARTMENT.

07/02/2021
FIRE CODE OFFICIAL OR DESIGNATED REPRESENTATIVE — DATE

(NOTE - UNDERGROUND FIRE LINE (UFL) SUBMITTAL DOCUMENTS MUST MEET THE REQUIREMENT OF NFPA 24 WHEN SUBMITTING FOR REVIEW.

THE DISTRICT INSPECTOR MUST BE NOTIFIED AT LEAST 48 HOURS PRIOR TO START OF CONSTRUCTION. CALL PARKER WATER AND SANITATION DISTRICT AT 303-841-4627. THE DISTRICT WILL PROVIDE PERIODIC INSPECTIONS OF THE WORK. 24 HOUR NOTICE TO THE INSPECTOR IS REQUIRED FOR SCHEDULINE INSPECTIONS.
ANY WORK ACCOMPLISHED WITHOUT THE APPROVAL OF THE INSPECTOR WILL BE SUBJECT TO REJECTION.

REVIEWED FOR CONFORMANCE TO PARKER WATER AND SANITATION DISTRICT STANDARDS.

BY: _____
(DISTRICT REPRESENTATIVE)

DATE SIGNED: _____

APPROVED FOR CONSTRUCTION:
PARKER WATER AND SANITATION DISTRICT

BY: _____
(DISTRICT ENGINEER)

DATE SIGNED: _____

DEVELOPER

HR 935 LLC
7353 SOUTH ALTON WAY
CENTENNIAL, CO 80112
TEL: (303) 770-9111
CONTACT: MATT JANKE

PLANNER/ LANDSCAPE DESIGNER:

PCS GROUP, INC.
200 KALAMATH STREET
DENVER, CO 80233
TEL: (303) 531-4905
CONTACT: JOHN PRESTWICH

SURVEYOR/ ENGINEER:

CVL, A WESTWOOD TEAM
10333 E. DRY CREEK RD. STE 240
ENGLEWOOD, CO 80112
TEL: (720) 482-9526
CONTACT: JIM JANNICKE

UTILITY DISTRICT

PARKER WATER AND SANITATION DISTRICT
18100 E. WOODMAN DRIVE
PARKER, CO 80134
TEL: (303) 841-4627

CALL 811
TWO WORKING DAYS
BEFORE YOU DIG
UNCC UTILITY NOTIFICATION CENTER OF COLORADO 1-800-922-1987

BENCHMARK
DOUGLAS COUNTY CONTROL POINT KNOWN AS 1.060032, BEING A 3-1/4" ALUMINUM CAP, BEING LOCATED IN THE SOUTHWEST QUARTER OF SECTION 33, TOWNSHIP 6 SOUTH, RANGE 66 WEST OF THE SIXTH PRINCIPAL MERIDIAN, HAVING A PUBLISHED ELEVATION OF 1799.2870 METERS (5903.13 FEET) NAVD '88 DATUM.

BASIS OF BEARINGS:
THE EAST LINE OF THE NORTHEAST QUARTER OF SAID SECTION 9 BEING MONUMENTED AT THE NORTHEAST CORNER OF SAID SECTION 9 BY A 3-1/4" ALUMINUM CAP STAMPED LS 23053 AND AT THE EAST QUARTER CORNER OF SAID SECTION 9 BY A 2-1/2" ALUMINUM CAP STAMPED LS 6935 BEING CONSIDERED TO BEAR SOUTH 00°15'06" EAST, 2648.70 FEET.

PREPARED UNDER THE SUPERVISION OF
COLORADO LICENSED BRIAN P. WILSON 0050067 PROFESSIONAL ENGINEER
6-30-21
BRIAN P. WILSON
COLORADO P.E. 0050067

Date	Appr.	Init.	Date	Revisions	No.

10333 E. Dry Creek Rd.
Suite 240
Englewood, CO 80112
Tel: 720.482.9526
www.cvlinc.net
westwoodps.com
CVL a Westwood team

HR 935 LLC
7353 South Alton Way
CENTENNIAL, CO 80112

TRAILS AT CROWFOOT
FILING 12 CONSTRUCTION DRAWINGS
COVER SHEET

SCALE:	AS SHOWN	FILE NO:	8130283701
DRAWN BY:	KJD		
CHECKED BY:	JJJ		
DATE:	SEPTEMBER 2017		
SHEET NUMBER	1		

N:\PROJECTS\HESS RANCH\CAD\ENGINEERING\SHEET SETS\CD'S\F12\PARKER WATER AND SANITATION\F12 COVER.DWG, RHROWLAND, 6/17/2021 9:36 AM

GENERAL NOTES

1. ALL MATERIALS AND WORKMANSHIP SHALL BE IN CONFORMANCE WITH THE PWSD ENGINEERING STANDARDS AND SPECIFICATIONS, LATEST VERSION.
2. THE CONTRACTOR SHALL CONTACT ALL APPROPRIATE UTILITY COMPANIES AND THE TOWN OF PARKER, DOUGLAS COUNTY AND OTHER NEIGHBORING CITIES AND TOWNS PRIOR TO THE BEGINNING OF ANY CONSTRUCTION. CONTRACTOR SHALL BE RESPONSIBLE FOR LOCATING ANY EXISTING UTILITY (INCLUDING DEPTHS) WHICH MAY CONFLICT WITH THE PROPOSED CONSTRUCTION. ALL EXISTING UTILITIES SHALL BE PROTECTED FROM DAMAGE BY THE CONTRACTOR. DAMAGED UTILITIES SHALL BE REPAIRED BY THE CONTRACTOR AT HIS OWN EXPENSE.
3. ALL ITEMS SHOWN ON THE PLANS AS EXISTING ARE SHOWN IN APPROXIMATE LOCATIONS ONLY. THE ACTUAL LOCATIONS MAY VARY FROM THE PLANS, ESPECIALLY IN THE CASE OF UNDERGROUND UTILITIES. WHENEVER THE CONTRACTOR DISCOVERS A DISCREPANCY IN LOCATIONS CONTACT THE PWSD IMMEDIATELY.
4. PWSD ENGINEER AND OTHER APPROVING AGENCIES ARE TO BE NOTIFIED 48 HOURS PRIOR TO CONSTRUCTION.
5. THE CONTRACTOR SHALL OBTAIN, AT HIS EXPENSE, ALL PERMITS NECESSARY TO PERFORM THE PROPOSED WORK.
6. ALL CONCRETE SHALL BE A MINIMUM OF CLASS A, 6 SACK, TYPE II, 3000-POUND COMPRESSION STRENGTH.
7. THE DESIGN ENGINEER SHALL SUBMIT ONE (1) SET OF "AS-BUILT" DRAWINGS AND ELECTRONIC FILES TO THE DISTRICT ENGINEER FOR APPROVAL BY DISTRICT. AFTER APPROVAL HAS BEEN GRANTED BY THE DISTRICT ENGINEER, FULL SIZE PRINTS SHALL BE TRANSMITTED TO THE PWSD OFFICE.
8. NO WORK SHALL BE BACKFILLED UNTIL THE CONSTRUCTION HAS BEEN INSPECTED AND APPROVED FOR BACKFILLING BY THE DISTRICT ENGINEER OR REPRESENTATIVE OF THE DISTRICT ENGINEER. ALL BACKFILL MATERIAL SHALL BE COMPACTED TO 95% STANDARD PROCTOR DENSITY. COMPACTION TESTS MUST BE SUBMITTED TO DISTRICT ENGINEER PRIOR TO PROBATIONARY ACCEPTANCE.
9. TRENCHES SHALL BE EXCAVATED AND THE PIPE EXPOSED FOR THE INSPECTION AT ANY LOCATION ON THE PROJECT IF SO ORDERED BY THE INSPECTOR.
10. THE CONTRACTOR WILL BE HELD RESPONSIBLE FOR THE PROPER FUNCTIONING OF LINES (WATER AND SEWER) FOR UP TO TWO (2) YEARS FROM THE DATE OF PROBATIONARY ACCEPTANCE OF THE LINES BY THE DISTRICT. ANY MALFUNCTION DURING THIS PERIOD OF GUARANTEE SHALL BE REMEDIED BY THE CONTRACTOR TO THE SATISFACTION OF THE DISTRICT ENGINEER AT NO EXPENSE TO THE DISTRICT.
11. SURFACE GRADES ARE TO BE WITHIN PLUS OR MINUS ONE FOOT OF FINISHED GRADE AND VERIFICATION OF COMPACTION RESULTS OBTAINED PRIOR TO THE INSTALLATION OF WATER AND SEWER LINES. RESULTS MUST BE SUBMITTED TO THE DISTRICT ENGINEER.
12. ALL SERVICES WILL BE PERMANENTLY MARKED ON CURB FACE AS FOLLOWS:
    "X" FOR SANITARY SERVICE SEWERS
    "V" FOR WATER SERVICES
14. NO TREES ALLOWED IN EASEMENTS OR WITHIN 8' OF WATER OR SANITARY SEWER MAINS IN RIGHT OF WAY.
15. THE CONTRACTOR SHALL HAVE IN HIS POSSESSION AT ALL TIMES ONE (1) SIGNED COPY OF THE PLANS WHICH HAVE BEEN APPROVED BY THE PWSD AND THE DISTRICT ENGINEER AND ONE (1) COPY OF THE LATEST PWSD SPECIFICATION MANUAL.

WATER SYSTEM NOTES

1. ALL MATERIALS AND WORKMANSHIP SHALL BE IN CONFORMANCE WITH THE PWSD ENGINEERING STANDARDS AND SPECIFICATIONS, LATEST REVISION.
2. ALL WATER MAINS SHALL BE PER PWSD MATERIALS SPECIFICATIONS. ALL MATERIALS IN CONTACT WITH POTABLE WATER SHALL BE SUITABLE FOR CHLORINATED AND CHLORAMINATED WATER.
3. ALL BENDS, PLUGS, REDUCERS, AND FIRE HYDRANTS TO BE RODDED OR MEGA-LUGGED. ALL FITTINGS SHALL BE WRAPPED PER PWSD MATERIALS SPECIFICATIONS.
4. THERE SHALL BE A MINIMUM COVER OF 4.5 FEET OVER ALL WATER MAINS.
5. FIRE HYDRANTS SHALL CONFORM TO AWWA C-502 "DRY BARREL FIRE HYDRANTS" PIPE HYDRANT ASSEMBLIES PER PWSD SPECIFICATIONS.
6. ALL BENDS, TEES, FIRE HYDRANTS, BLOW-OFFS, AND PLUGS AT DEAD-END MAINS SHALL BE PROTECTED FROM THRUST WITH CONCRETE THRUST BLOCKS.
7. PRECAUTIONS SHALL BE TAKEN TO PROTECT THE INTERIOR OF PIPES, FITTINGS, AND VALVES AGAINST CONTAMINATION. ALL OPENINGS IN THE PIPELINE SHALL BE CLOSED WITH WATERTIGHT PLUGS WHEN PIPE LAYING IS STOPPED AT THE CLOSE OF THE DAY'S WORK OR FOR OTHER REASONS, SUCH AS REST BREAKS OR MEAL PERIODS.
8. VALVES IN STREETS ARE TO BE LOCATED AT PROPERTY LINE EXTENSIONS EXCEPT FOR TAPPING TEES; WHERE AN ADDITIONAL VALVE SHALL BE PLACED ON THE TAPPING TEE. OTHER LOCATIONS SHOWN ON THE PLANS.
9. WHEN NECESSARY TO LOWER OR RAISE WATER LINES AT STORM DRAINS AND OTHER UTILITY CROSSING, A MINIMUM CLEARANCE OF 1.5 FEET SHALL BE MAINTAINED BETWEEN OUTSIDE OF PIPES.
10. THE CONTRACTOR SHALL NOTIFY THE PWSD AT LEAST 48 HOURS PRIOR TO ANY CONSTRUCTION. IF WORK IS SUSPENDED FOR ANY PERIOD OF TIME AFTER INITIAL START-UP, THE CONTRACTOR MUST NOTIFY THE DISTRICT ENGINEER 48 HOURS PRIOR TO RE-START.
11. PIPE BEDDING SHALL BE A CLEAN, WELL-GRADED SAND OR SQUEEGEE SAND IN ACCORDANCE WITH PWSD STANDARDS AND SPECIFICATIONS, LATEST REVISION.
12. THE CONTRACTOR SHALL NOTIFY THE PUBLIC UTILITY COMPANIES AND DETERMINE THE LOCATION OF ALL EXISTING UNDERGROUND UTILITIES PRIOR TO PROCEEDING WITH THE EXCAVATION. ALL WORK PERFORMED IN THE AREA OF THE PUBLIC UTILITIES SHALL BE PERFORMED ACCORDING TO THE REQUIREMENTS OF THESE AGENCIES.
13. COMPACTION OF ALL TRENCHES MUST BE ATTAINED IN ACCORDANCE WITH THE SOILS REPORTS AND COMPACTION TEST RESULTS SUBMITTED TO THE DISTRICT ENGINEER PRIOR TO PROBATIONARY ACCEPTANCE.
14. AT LEAST FIVE (5) DAYS PRIOR TO THE START OF CONSTRUCTION, A PRE-CONSTRUCTION MEETING WILL BE HELD AT THE OFFICE OF THE DISTRICT ENGINEER AND ATTENDED BY THE CONTRACTOR, DESIGN ENGINEER, AND REPRESENTATIVE OF OTHER APPROVING AGENCIES.
15. CHLORINATION AND FLUSHING: ALL WATER MAINS SHALL BE INSTALLED AND CHLORINATED PER PWSD SPECIFICATIONS. CHLORINATION OF FINISHED PIPELINE COMPLETED BEFORE HYDROSTATIC TESTING.
16. HYDROSTATIC TESTING: ALL WATER MAINS SHALL BE TESTED PER THE REQUIREMENTS OF THE PWSD SPECIFICATIONS UP TO MINIMUM OF 150 PSI IN THE PRESENCE OF A PWSD INSPECTOR/ENGINEER.

SANITARY SEWER NOTES

1. ALL MATERIALS AND WORKMANSHIP SHALL BE IN CONFORMANCE WITH THE PWSD ENGINEERING STANDARDS AND SPECIFICATIONS, LATEST VERSION.
2. ALL SEWER MAINS SHALL BE PVC, ASTM D-3034, SDR 35 OR APPROVED EQUAL. ALL SEWER MAIN SIZE IS 8" IN DIAMETER UNLESS OTHERWISE NOTED.
3. SEWER LINES SHALL BE INSTALLED 5.0 FEET SOUTH OR WEST OF STREET CENTERLINE, UNLESS OTHERWISE SHOWN ON PLANS. SEWER LINES SHALL BE 10.00 FEET FROM WATER LINES EXCEPT WHEN CROSSING EACH OTHER. SEWER LINES WHICH CROSS LESS THAN 1.50 FEET VERTICALLY FROM THE WATER MAIN SHALL BE ENCASED IN CONCRETE AS PER PWSD SPECIFICATIONS. USE RUBBER GASKETS FOR PVC ENCASEMENT.
4. SEWER RIM ELEVATIONS SHOWN ARE APPROPRIATE ONLY AND ARE NOT TO BE TAKEN AS FINAL ELEVATIONS. RING AND COVER SHALL BE SET IN CENTERED CONCRETE RINGS WITH RAM-NECK FOR ADJUSTMENT TO MATCH FINAL PAVEMENT ELEVATIONS.
5. THE CONTRACTOR AND SURVEY CREW SHALL VERIFY ELEVATIONS OF EXISTING SEWER LINES AND MANHOLES TO BE TIED TO PRIOR TO CONSTRUCTION OR STAKING OF SANITARY SEWER.
6. NO UNDERDRAIN SYSTEM WILL BE ALLOWED TO BE PLACED IN MAINLINE OR SEWER SERVICE TRENCHES.
7. SEWER SERVICE TEES FOR EACH UNIT SHALL BE STAKED BY A SURVEY CREW AND FURNISHED AND INSTALLED BY THE CONTRACTOR. THE CONTRACTOR SHALL FURNISH TO THE ENGINEER "AS CONSTRUCTED" LOCATION OF TEES. SEWER WYES SHALL BE USED RATHER THAN TEES.
8. ALL MANHOLES SHALL BE 48-INCHES IN DIAMETER WITH 24-INCH RING AND COVER, ECCENTRIC CONE UNLESS OTHERWISE SPECIFIED. ALL MANHOLES SHALL HAVE SHAPED INVERTS.
9. PIPE BEDDING SHALL BE CLASS "B" AND SHALL CONFORM TO ASTM C-33 OR D-448 GRADATION NO. 6 OR NO. 67.
10. AT LEAST FIVE (5) DAYS PRIOR TO THE START OF CONSTRUCTION, A PRE-CONSTRUCTION MEETING WILL BE HELD AT THE OFFICE OF THE DISTRICT ENGINEER AND ATTENDED BY THE CONTRACTOR AND REPRESENTATIVES OF THE OTHER APPROVING AGENCIES. IT WILL BE THE RESPONSIBILITY OF THE CONTRACTOR TO CONTACT THE DISTRICT ENGINEER TO SCHEDULE THIS MEETING.
11. THE CONTRACTOR SHALL HAVE IN HIS POSSESSION AT ALL TIMES ONE (1) SIGNED COPY OF THE PLANS WHICH HAVE BEEN APPROVED BY THE PWSD AND THE DISTRICT ENGINEER AND ONE (1) COPY OF THE LATEST PWSD SPECIFICATION MANUAL.
12. ALL SEWER LINES SHALL BE TESTED IN ACCORDANCE WITH THE PWSD STANDARDS AND SPECIFICATIONS PRIOR TO ACCEPTANCE OR ANY CONNECTION TO AN EXISTING SEWER LINE.
13. PRIOR TO STARTING WORK WHERE SEWER MAIN IS TO BE CONNECTED TO EXISTING PWSD SEWER SYSTEMS. THE NEAREST MANHOLE TO THE POINT OF TIE-IN SHALL BE PLUGGED WITH A PLUMBER'S PLUG ON THE INLET SIDE BY THE CONTRACTOR. THIS PLUG SHALL REMAIN IN PLACE UNTIL FINAL PROBATIONARY ACCEPTANCE BY PWSD. THE CONTRACTOR SHALL BE RESPONSIBLE FOR PUMPING AND CLEANING THESE MANHOLES AND REMOVING THE PLUG WHEN INSTRUCTED BY THE DISTRICT.
14. PRIOR TO PROBATIONARY ACCEPTANCE WALK-THROUGH, THE CONTRACTOR SHALL JET CLEAN THE ENTIRE SANITARY SEWER SYSTEM AND PUMP OUT AT THE PLUGGED MANHOLE.

CALL 811
TWO WORKING DAYS
BEFORE YOU DIG
UNCC UTILITY NOTIFICATION CENTER OF COLORADO 1-800-922-1987

BENCHMARK
DOUGLAS COUNTY CONTROL POINT KNOWN AS 1.060032, BEING A 3-1/4" ALUMINUM CAP, BEING LOCATED IN THE SOUTHWEST QUARTER OF SECTION 33, TOWNSHIP 6 SOUTH, RANGE 66 WEST OF THE SIXTH PRINCIPAL MERIDIAN, HAVING A PUBLISHED ELEVATION OF 1799.2870 METERS (5903.13 FEET) NAVD '88 DATUM.

BASIS OF BEARINGS:
THE EAST LINE OF THE NORTHEAST QUARTER OF SAID SECTION 9 BEING MONUMENTED AT THE NORTHEAST CORNER OF SAID SECTION 9 BY A 3-1/4" ALUMINUM CAP STAMPED LS 23053 AND AT THE EAST QUARTER CORNER OF SAID SECTION 9 BY A 2-1/2" ALUMINUM CAP STAMPED LS 6935 BEING CONSIDERED TO BEAR SOUTH 00°15'06" EAST, 2648.70 FEET.

PREPARED UNDER THE SUPERVISION OF
COLORADO LICENSED BRIAN P. WILSON 0050067 PROFESSIONAL ENGINEER
6-30-21
BRIAN P. WILSON
COLORADO P.E. 0050067

No.	Revisions	Date	Init.	Appr.	Date

CIVIL a Westwood team
10333 E. Dry Creek Rd.
Suite 240
Englewood, CO 80112
Tel: 720.482.9526
www.civilts.net
westwoodps.com

HR 935 LLC
7353 South Alton Way
CENTENNIAL, CO 80112

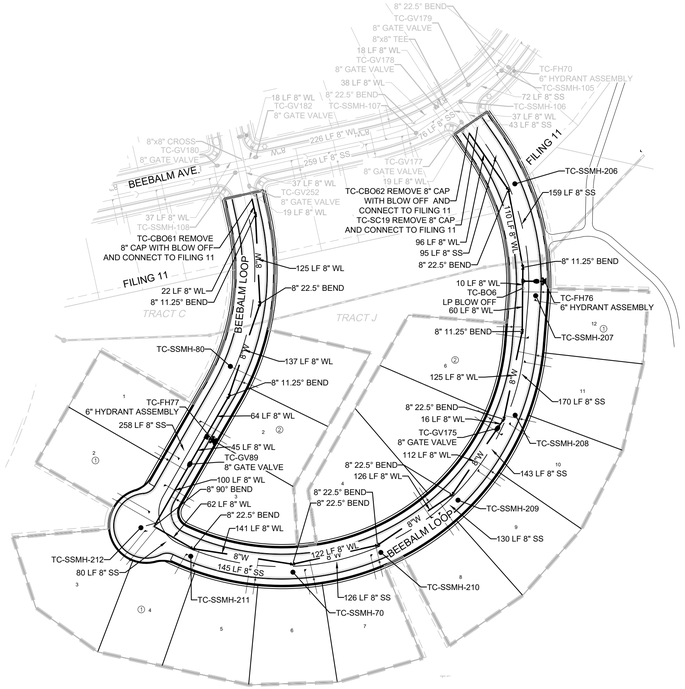
TRAILS AT CROWFOOT
FILING 12 CONSTRUCTION DRAWINGS
PARKER WATER AND SANITATION NOTES

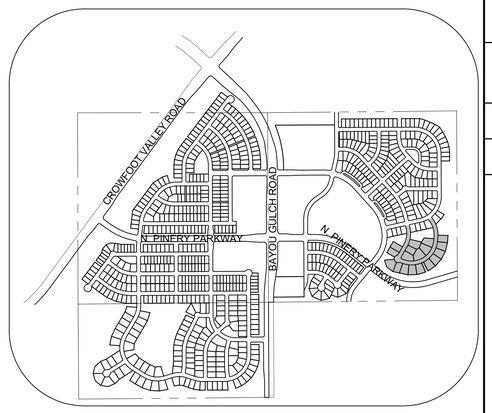
DRAWN BY:	KJD	SCALE:	AS SHOWN
CHECKED BY:	JJ	FILE NO:	8130283701
DATE:	SEPTEMBER 2017		

SHEET NUMBER 2

N:\PROJECTS\HESS RANCH\CAD\ENGINEERING\SHEET SETS\CD'S\F12\PARKER WATER AND SANITATION\F12 COVER.DWG, RHROWLAND, 6/17/2021 9:36 AM

SERVICE TABLE			
FILING, BLOCK, LOT	STREET	SANITARY STATIONING	WATER STATIONING
F12,B1,L1	BEEBALM LOOP	29+50.25	29+60.25
F12,B1,L2	BEEBALM LOOP	10+23.20	10+37.66
F12,B1,L3	BEEBALM LOOP	10+41.14	10+43.08
F12,B1,L4	BEEBALM LOOP	10+93.97	11+08.63
F12,B1,L5	BEEBALM LOOP	11+83.19	11+93.73
F12,B1,L6	BEEBALM LOOP	12+58.55	12+67.20
F12,B1,L7	BEEBALM LOOP	13+51.92	13+63.49
F12,B1,L8	BEEBALM LOOP	14+62.18	14+73.36
F12,B1,L9	BEEBALM LOOP	15+42.16	15+52.12
F12,B1,L10	BEEBALM LOOP	16+20.13	16+28.14
F12,B1,L11	BEEBALM LOOP	17+07.78	17+21.65
F12,B1,L12	BEEBALM LOOP	17+94.58	18+05.80
F12,B2,L1	BEEBALM LOOP	28+02.69	28+16.97
F12,B2,L2	BEEBALM LOOP	28+90.38	29+00.34
F12,B2,L3	BEEBALM LOOP	29+92.34	30+02.34
F12,B2,L4	BEEBALM LOOP	14+49.92	14+60.76
F12,B2,L5	BEEBALM LOOP	16+01.73	16+13.11
F12,B2,L6	BEEBALM LOOP	17+41.37	17+56.61





KEYMAP
N.T.S.

LEGEND

(2)	BLOCK NUMBER	△	PROPOSED RANGE POINT
(A)	LOT TYPE		CENTERLINE
6	LOT NUMBER		RIGHT-OF-WAY
	PROPOSED BUTTERFLY VALVE		PROPERTY LINE
	PROPOSED CAP WITH END OF LINE BLOWOFF		EDGE OF PAVEMENT
	PROPOSED REDUCER		PROPOSED DIRECTION OF FLOW
	PROPOSED VALVE	1.0%	PROPOSED SLOPE & DIRECTION
	PROPOSED FIRE HYDRANT	5615	EXISTING 5' CONTOUR
	PROPOSED WL FITTING WITH THRUST BLOCK	5616	EXISTING 1' CONTOUR
	PROPOSED FLARED END SECTION	5620	PROPOSED 5' CONTOUR
	PROPOSED LOW POINT BLOW-OFF	5607	PROPOSED 1' CONTOUR
	PROPOSED AIR VALVE		PROPOSED STORM DRAIN
	FUTURE PHASE VALVE		PROPOSED SEWER LINE WITH MANHOLE
	FUTURE FIRE HYDRANT		PROPOSED SEWER LATERAL
	PROPOSED LIGHT POLE	8"W	PROPOSED WATER LINE
	PROPOSED SIDEWALK		PROPOSED WATER LATERAL W/ METER
	PROPOSED SIDEWALK RAMP		SECTION LINE
10.00	EXISTING ELEVATION		FILING BOUNDARY
10.00	PROPOSED DESIGN ELEVATION	FO	EXISTING FIBER OPTIC LINE
	PROPOSED STORM DRAIN INLET	OH	EXISTING OVERHEAD POWER
(4)(5)(6)	PROPOSED STORM DRAIN MANHOLE	TEL	EXISTING TELEPHONE LINE
			PWSD EASEMENT
			TYP. EASEMENT

ABBREVIATIONS

AD	ANGLE DIFFERENCE	MH	MANHOLE
AV	AIR VAC RELEASE VALVE	N.T.S.	NOT TO SCALE
BVC	BEGIN VERTICAL CURVE	PVC	POLYVINYL CHLORIDE
BVP	BEGIN VERTICAL PROFILE	PVI	PT. OF VERTICAL INTERSECTION
CBO	CAP WITH BLOW OFF	PVT	POINT OF VERTICAL TANGENT
CRR	CURB RETURN RADIUS	RCBC	REINFORCED CONCRETE BOX CULVERT
EL	ELEVATION	RCP	REINFORCED CONCRETE PIPE
EP	EDGE OF PAVEMENT	ROW	RIGHT OF WAY
EVC	END VERTICAL CURVE	SC	SANITARY CAP
EVP	END VERTICAL PROFILE	SD	STORM DRAIN
FG	FINISHED GROUND	SL	SECTION LINE
FH	FIRE HYDRANT	SS	SANITARY SEWER
FL	FLOW LINE	STA	STATION
GV	GATE VALVE	T.O.P.	TOP OF PIPE
HCR	HANDICAP CURB RAMP	UE	UTILITY EASEMENT
HP	HIGH POINT	VC	VERTICAL CURVE
INV	INVERT	WL	WATER LINE
K	CURVATURE COEFFICIENT	WLC	WATER LINE CONNECTION
LF	LINEAR FEET	WSE	WATER SURFACE ELEVATION

100 50 0 100 200

SCALE: 1" = 100'

THE TOWN OF PARKER REVIEW CONSTITUTES GENERAL COMPLIANCE WITH THE TOWN'S STANDARDS AND APPROVED VARIANCES, SUBJECT TO THESE PLANS BEING STAMPED, SIGN, AND DATED BY THE PROFESSIONAL ENGINEER OF RECORD. REVIEW BY THE TOWN DOES NOT CONSTITUTE APPROVAL OF THE PLAN DESIGN OR ACCURACY AND CORRECTNESS OF ENGINEERING CALCULATIONS. ERRORS IN THE DESIGN OR CALCULATIONS REMAIN THE RESPONSIBILITY OF THE REGISTERED PROFESSIONAL ENGINEER WHOSE STAMP AND SIGNATURE ARE AFFIXED TO THIS DOCUMENT.

THIS REVIEW DOES NOT CONSTITUTE APPROVAL OF ANY PRIVATE ON-SITE IMPROVEMENTS WHICH MAY BE SHOWN. CONSTRUCTION CANNOT COMMENCE UNTIL ALL REQUIRED DRAINAGE/TRAFFIC REPORT(S), FINAL DEVELOPMENT PLAN(S), SPECIAL REVIEW(S), GRADING PERMIT, AND/OR OTHER PERMITS ARE COMPLETE, APPROVED AND ON FILE WITH THE TOWN OF PARKER.

TOWN OF PARKER, DIRECTOR OF ENGINEERING — DATE

FIRE DEPARTMENT APPROVAL

ALL FIRE HYDRANTS SHALL BE INSTALLED ACCORDING TO WATER UTILITY STANDARDS. THE NUMBER AND LOCATIONS OF THE FIRE HYDRANTS AS SHOWN ON THE OVERALL UTILITY PLAN ARE CORRECT AS SPECIFIED BY THE TOWN OF PARKER, COMMUNITY DEVELOPMENT DEPARTMENT.

FIRE CODE OFFICIAL OR DESIGNATED REPRESENTATIVE — 07/02/2021 DATE

(NOTE - UNDERGROUND FIRE LINE (UFL) SUBMITTAL DOCUMENTS MUST MEET THE REQUIREMENT OF NFPA 24 WHEN SUBMITTING FOR REVIEW.)

BENCHMARK
DOUGLAS COUNTY CONTROL POINT KNOWN AS 1.060032, BEING A 3-1/4" ALUMINUM CAP, BEING LOCATED IN THE SOUTHWEST QUARTER OF SECTION 33, TOWNSHIP 6 SOUTH, RANGE 66 WEST OF THE SIXTH PRINCIPAL MERIDIAN, HAVING A PUBLISHED ELEVATION OF 1799.2870 METERS (5903.13 FEET) NAVD '88 DATUM.

BASIS OF BEARINGS:
THE EAST LINE OF THE NORTHEAST QUARTER OF SAID SECTION 9 BEING MONUMENTED AT THE NORTHEAST CORNER OF SAID SECTION 9 BY A 3-1/4" ALUMINUM CAP STAMPED LS 23053 AND AT THE EAST QUARTER CORNER OF SAID SECTION 9 BY A 2-1/2" ALUMINUM CAP STAMPED LS 6935 BEING CONSIDERED TO BEAR SOUTH 00°15'06" EAST, 2648.70 FEET.

PREPARED UNDER THE SUPERVISION OF

COLORADO LICENSED BRIAN P. WILSON 50067 PROFESSIONAL ENGINEER
6-30-21

BRIAN P. WILSON
COLORADO P.E. 0050067

THE DISTRICT INSPECTOR MUST BE NOTIFIED AT LEAST 48 HOURS PRIOR TO START OF CONSTRUCTION. CALL PARKER WATER AND SANITATION DISTRICT AT 303-841-4627. THE DISTRICT WILL PROVIDE PERIODIC INSPECTIONS OF THE WORK. 24 HOUR NOTICE TO THE INSPECTOR IS REQUIRED FOR SCHEDULINE INSPECTIONS. ANY WORK ACCOMPLISHED WITHOUT THE APPROVAL OF THE INSPECTOR WILL BE SUBJECT TO REJECTION.

REVIEWED FOR CONFORMANCE TO PARKER WATER AND SANITATION DISTRICT STANDARDS.

BY: _____ (DISTRICT REPRESENTATIVE) — DATE

APPROVED FOR CONSTRUCTION:
PARKER WATER AND SANITATION DISTRICT

BY: _____ (DISTRICT ENGINEER) — DATE

CALL 811
TWO WORKING DAYS
BEFORE YOU DIG
UNCC UTILITY NOTIFICATION CENTER OF COLORADO
1-800-922-1987

N:\PROJECTS\HESS RANCH\CAD\ENGINEERING\SHEET SETS\CD'S\F12\PARKER WATER AND SANITATION\F12 AREA UTILITY PLAN.DWG, RHROWLAND, 6/17/2021 9:38 AM

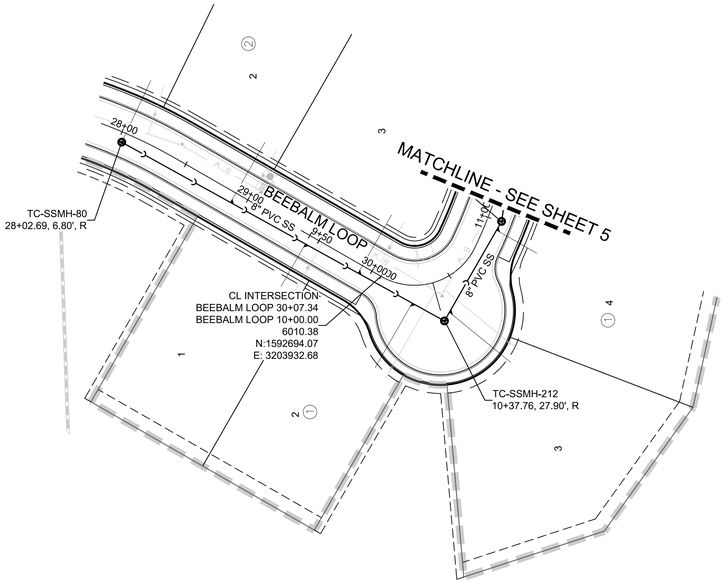
No.	Revisions	Date	Init.	Appr.	Date

CIVIL a Westwood team
10333 E. Dry Creek Rd.
Suite 240
Englewood, CO 80112
Tel: 720.482.9526
www.civil-co.com
westwoodps.com

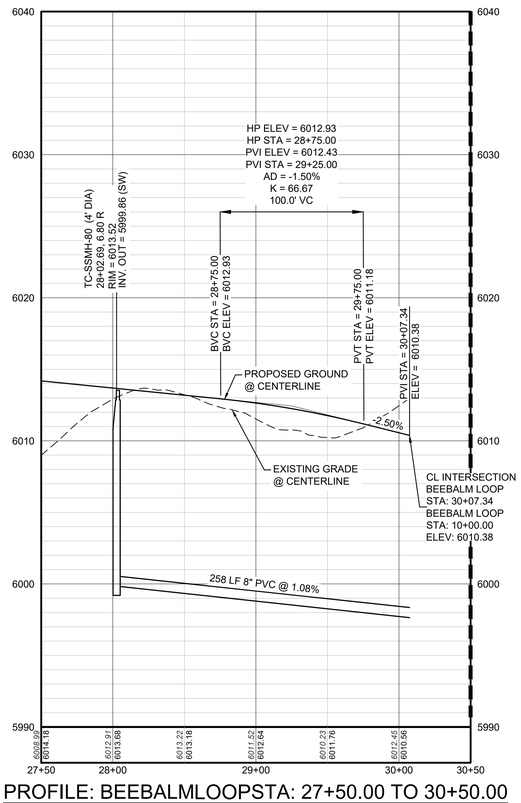
HR 935 LLC
7353 South Alton Way
CENTENNIAL, CO 80112

TRAILS AT CROWFOOT
FILING 12 CONSTRUCTION DRAWINGS
AREA UTILITY PLAN

SCALE: AS SHOWN
FILE NO: 8130283701
DRAWN BY: JLR
CHECKED BY: JJJ
DATE: SEPTEMBER 2017
SHEET NUMBER 3

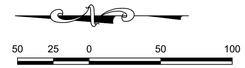


PLAN: BEEBALM LOOP STA: 28+00.00 TO 30+50.00
HORIZONTAL SCALE: 1" = 50'

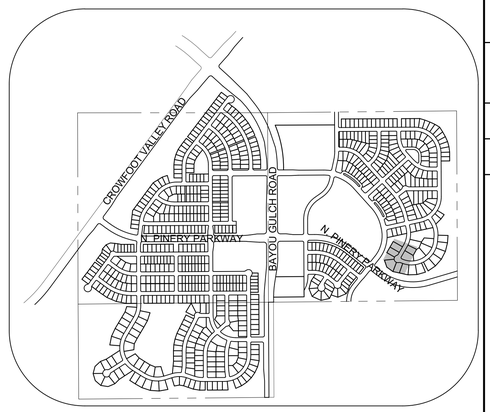


PROFILE: BEEBALMLOOPSTA: 27+50.00 TO 30+50.00
HORIZONTAL: 1" = 50'
VERTICAL: 1" = 5'

MATCHLINE - SEE SHEET 5



SCALE: 1" = 50'



KEYMAP
N.T.S.

LEGEND

(2) BLOCK NUMBER	PROPOSED RANGE POINT
(A) LOT TYPE	CENTERLINE
6 LOT NUMBER	RIGHT-OF-WAY
PROPOSED BUTTERFLY VALVE	PROPERTY LINE
PROPOSED CAP WITH END OF LINE BLOWOFF	EDGE OF PAVEMENT
PROPOSED REDUCER	PROPOSED DIRECTION OF FLOW
PROPOSED VALVE	1.0% PROPOSED SLOPE & DIRECTION
PROPOSED FIRE HYDRANT	5615 EXISTING 5' CONTOUR
PROPOSED WL FITTING WITH THRUST BLOCK	5616 EXISTING 1' CONTOUR
PROPOSED FLARED END SECTION	5620 PROPOSED 5' CONTOUR
PROPOSED LOW POINT BLOW-OFF	5607 PROPOSED 1' CONTOUR
PROPOSED AIR VALVE	PROPOSED STORM DRAIN
FUTURE PHASE VALVE	PROPOSED SEWER LINE WITH MANHOLE
FUTURE FIRE HYDRANT	PROPOSED SEWER LATERAL
PROPOSED LIGHT POLE	8"W PROPOSED WATER LINE
PROPOSED SIDEWALK	PROPOSED WATER LATERAL W/ METER
PROPOSED SIDEWALK RAMP	SECTION LINE
10.00 EXISTING ELEVATION	FILING BOUNDARY
10.00 PROPOSED DESIGN ELEVATION	FO EXISTING FIBER OPTIC LINE
PROPOSED STORM DRAIN INLET	OH EXISTING OVERHEAD POWER
(4)(5)(6) PROPOSED STORM DRAIN MANHOLE	TEL EXISTING TELEPHONE LINE
	PWSD EASEMENT
	TYP. EASEMENT

ABBREVIATIONS

AD	ANGLE DIFFERENCE	MH	MANHOLE
AV	AIR VAC RELEASE VALVE	N.T.S.	NOT TO SCALE
BVC	BEGIN VERTICAL CURVE	PVC	POLYVINYL CHLORIDE
BVP	BEGIN VERTICAL PROFILE	PVI	PT. OF VERTICAL INTERSECTION
CBO	CAP WITH BLOW OFF	PVT	POINT OF VERTICAL TANGENT
CRR	CURB RETURN RADIUS	RCBC	REINFORCED CONCRETE BOX CULVERT
EL	ELEVATION	RCP	REINFORCED CONCRETE PIPE
EP	EDGE OF PAVEMENT	ROW	RIGHT OF WAY
EVC	END VERTICAL CURVE	SC	SANITARY CAP
EVP	END VERTICAL PROFILE	SD	STORM DRAIN
FG	FINISHED GROUND	SL	SECTION LINE
FH	FIRE HYDRANT	SS	SANITARY SEWER
FL	FLOW LINE	STA	STATION
GV	GATE VALVE	T.O.P.	TOP OF PIPE
HCR	HANDICAP CURB RAMP	UE	UTILITY EASEMENT
HP	HIGH POINT	VC	VERTICAL CURVE
INV	INVERT	WL	WATER LINE
K	CURVATURE COEFFICIENT	WLC	WATER LINE CONNECTION
LF	LINEAR FEET	WSE	WATER SURFACE ELEVATION

1. SEE SHEET 3 FOR SANITARY SERVICE TABLES

CALL 811
TWO WORKING DAYS
BEFORE YOU DIG
UNCC 1-800-922-1987
UTILITY NOTIFICATION CENTER OF COLORADO

BENCHMARK
DOUGLAS COUNTY CONTROL POINT KNOWN AS 1.060032, BEING A 3-1/4" ALUMINUM CAP, BEING LOCATED IN THE SOUTHWEST QUARTER OF SECTION 33, TOWNSHIP 6 SOUTH, RANGE 66 WEST OF THE SIXTH PRINCIPAL MERIDIAN, HAVING A PUBLISHED ELEVATION OF 1799.2870 METERS (5903.13 FEET) NAVD '88 DATUM.

BASIS OF BEARINGS:
THE EAST LINE OF THE NORTHEAST QUARTER OF SAID SECTION 9 BEING MONUMENTED AT THE NORTHEAST CORNER OF SAID SECTION 9 BY A 3-1/4" ALUMINUM CAP STAMPED LS 23053 AND AT THE EAST QUARTER CORNER OF SAID SECTION 9 BY A 2-1/2" ALUMINUM CAP STAMPED LS 6935 BEING CONSIDERED TO BEAR SOUTH 00°15'06" EAST, 2648.70 FEET.

PREPARED UNDER THE SUPERVISION OF

COLORADO LICENSED BRIAN P. WILSON 0050067 PROFESSIONAL ENGINEER
6-30-21

BRIAN P. WILSON
COLORADO P.E. 0050067

No.	Revisions	Date	Init.	Appr.	Date

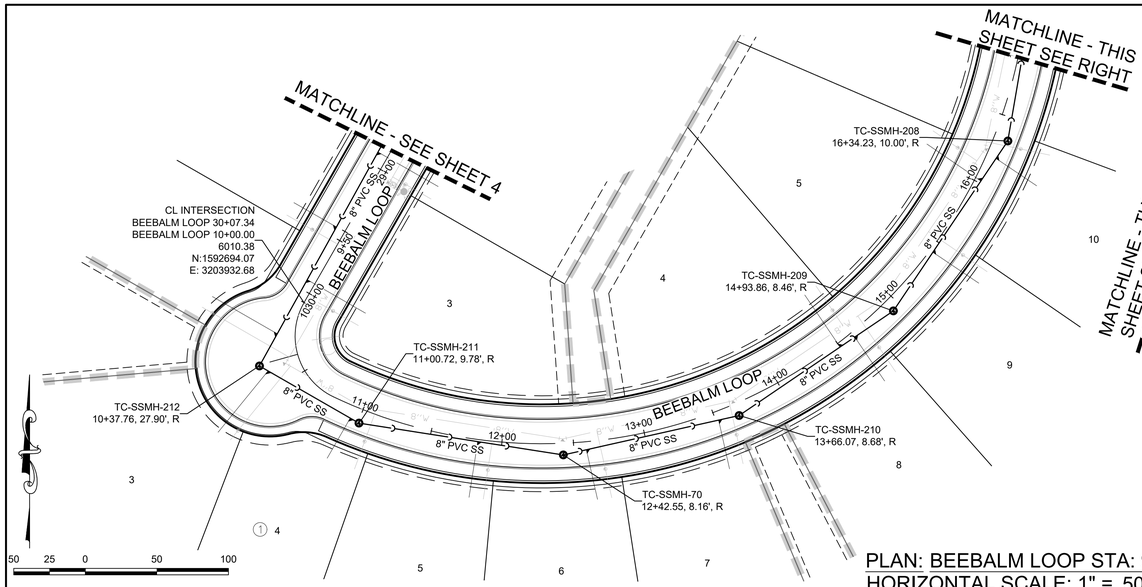
CVL
10333 E. Dry Creek Rd.
Suite 240
Englewood, CO 80112
Tel: 720.482.9526
www.cvlks.net
a Westwood team
westwoodps.com

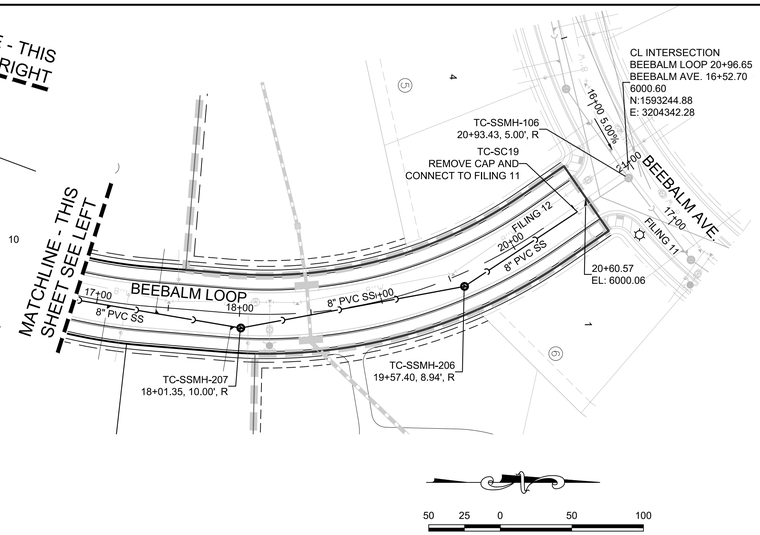
HR 935 LLC
7353 South Alton Way
CENTENNIAL, CO 80112

TRAILS AT CROWFOOT
FILING 12 CONSTRUCTION DRAWINGS
SANITARY SEWER PLAN AND PROFILE
BEEBALM LOOP

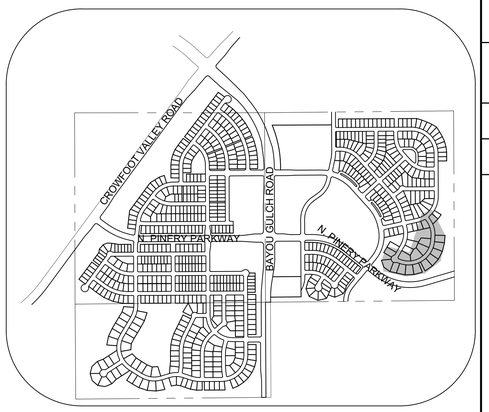
SCALE:	AS SHOWN		
DRAWN BY:	JLR	FILE NO:	81302837O1
CHECKED BY:	JJJ		
DATE:	SEPTEMBER 2017		
SHEET NUMBER	4		

N:\PROJECTS\HESS RANCH\CAD\ENGINEERING\SHEET SETS\C2\SF12\PARKER WATER AND SANITATION\SANITARY PLAN AND PROFILEF12 BEEBALM WAY SANITARY.DWG, RHROWLAND, 6/17/2021 9:38 AM

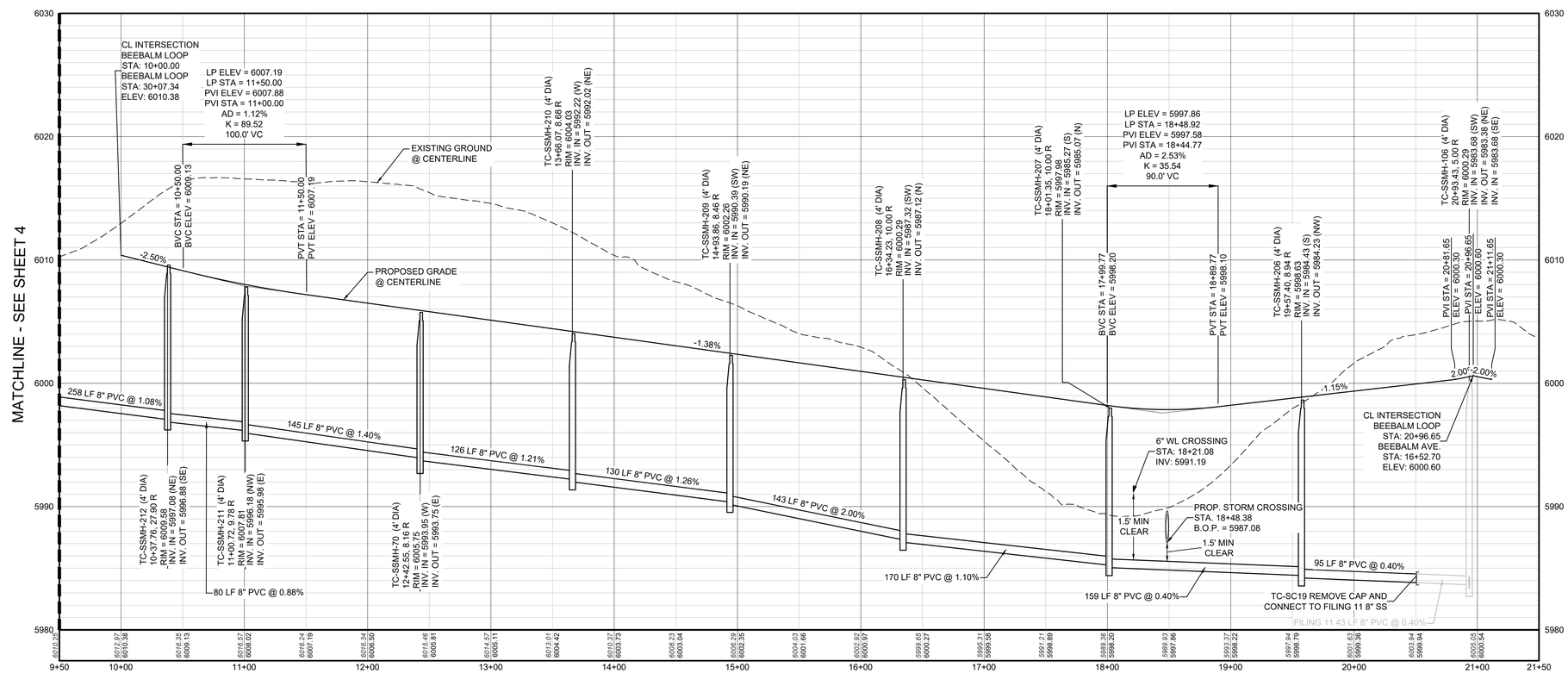




PLAN: BEEBALM LOOP STA: 9+50.00 TO 21+50.00
HORIZONTAL SCALE: 1" = 50'



KEYMAP
N.T.S.



PROFILE: BEEBALM LOOP STA: 9+50.00 TO 21+50.00
HORIZONTAL: 1" = 50'
VERTICAL: 1" = 5'

LEGEND

- BLOCK NUMBER
- LOT TYPE
- LOT NUMBER
- PROPOSED BUTTERFLY VALVE
- PROPOSED CAP WITH END OF LINE BLOWOFF
- PROPOSED REDUCER
- PROPOSED VALVE
- PROPOSED FIRE HYDRANT
- PROPOSED WL FITTING WITH THRUST BLOCK
- PROPOSED FLARED END SECTION
- PROPOSED LOW POINT BLOW-OFF
- PROPOSED AIR VALVE
- FUTURE PHASE VALVE
- FUTURE FIRE HYDRANT
- PROPOSED LIGHT POLE
- PROPOSED SIDEWALK
- PROPOSED SIDEWALK RAMP
- 10.00 EXISTING ELEVATION
- 10.00 PROPOSED DESIGN ELEVATION
- PROPOSED STORM DRAIN INLET
- PROPOSED STORM DRAIN MANHOLE
- PROPOSED RANGE POINT
- CENTERLINE
- RIGHT-OF-WAY
- PROPERTY LINE
- EDGE OF PAVEMENT
- PROPOSED DIRECTION OF FLOW
- 1.0% PROPOSED SLOPE & DIRECTION
- 5615 EXISTING 5' CONTOUR
- 5616 EXISTING 1' CONTOUR
- 5620 PROPOSED 5' CONTOUR
- 5607 PROPOSED 1' CONTOUR
- PROPOSED STORM DRAIN
- PROPOSED SEWER LINE WITH MANHOLE
- PROPOSED SEWER LATERAL
- 8"W PROPOSED WATER LINE
- PROPOSED WATER LATERAL W/ METER
- SECTION LINE
- FILING BOUNDARY
- FO EXISTING FIBER OPTIC LINE
- OH EXISTING OVERHEAD POWER
- TEL EXISTING TELEPHONE LINE
- PWSD EASEMENT
- TYP. EASEMENT

ABBREVIATIONS

AD	ANGLE DIFFERENCE	MH	MANHOLE
AV	AIR VAC RELEASE VALVE	N.T.S	NOT TO SCALE
BVC	BEGIN VERTICAL CURVE	PVC	POLYVINYL CHLORIDE
BVP	BEGIN VERTICAL PROFILE	PVI	PT. OF VERTICAL INTERSECTION
CBO	CAP WITH BLOW OFF	PVT	POINT OF VERTICAL TANGENT
CRR	CURB RETURN RADIUS	RCBC	REINFORCED CONCRETE BOX CULVERT
EL	ELEVATION	RCP	REINFORCED CONCRETE PIPE
EP	EDGE OF PAVEMENT	ROW	RIGHT OF WAY
EVC	END VERTICAL CURVE	SC	SANITARY CAP
EVP	END VERTICAL PROFILE	SD	STORM DRAIN
FG	FINISHED GROUND	SL	SECTION LINE
FH	FIRE HYDRANT	SS	SANITARY SEWER
FL	FLOW LINE	STA	STATION
GV	GATE VALVE	T.O.P.	TOP OF PIPE
HCR	HANDICAP CURB RAMP	UE	UTILITY EASEMENT
HP	HIGH POINT	VC	VERTICAL CURVE
INV	INVERT	WL	WATER LINE
K	CURVATURE COEFFICIENT	WLC	WATER LINE CONNECTION
LF	LINEAR FEET	WSE	WATER SURFACE ELEVATION

1. SEE SHEET 3 FOR SANITARY SERVICE TABLES

CALL 811
TWO WORKING DAYS
BEFORE YOU DIG
UNCC UTILITY NOTIFICATION CENTER OF COLORADO
1-800-922-1987

BENCHMARK
DOUGLAS COUNTY CONTROL POINT KNOWN AS 1.060032, BEING A 3-1/4" ALUMINUM CAP, BEING LOCATED IN THE SOUTHWEST QUARTER OF SECTION 33, TOWNSHIP 6 SOUTH, RANGE 66 WEST OF THE SIXTH PRINCIPAL MERIDIAN, HAVING A PUBLISHED ELEVATION OF 1799.2870 METERS (5903.13 FEET) NAVD '88 DATUM.

BASIS OF BEARINGS:
THE EAST LINE OF THE NORTHEAST QUARTER OF SAID SECTION 9 BEING MONUMENTED AT THE NORTHEAST CORNER OF SAID SECTION 9 BY A 3-1/4" ALUMINUM CAP STAMPED LS 23053 AND AT THE EAST QUARTER CORNER OF SAID SECTION 9 BY A 2-1/2" ALUMINUM CAP STAMPED LS 6935 BEING CONSIDERED TO BEAR SOUTH 00°15'06" EAST, 2648.70 FEET.

PREPARED UNDER THE SUPERVISION OF
COLORADO LICENSED BRIAN P. WILSON 0050067 PROFESSIONAL ENGINEER
6-30-21
BRIAN P. WILSON
COLORADO P.E. 0050067

CVL a Westwood team
10333 E. Dry Creek Rd.
Suite 240
Englewood, CO 80112
Tel: 720.482.9526
www.civilpts.com
westwoodps.com

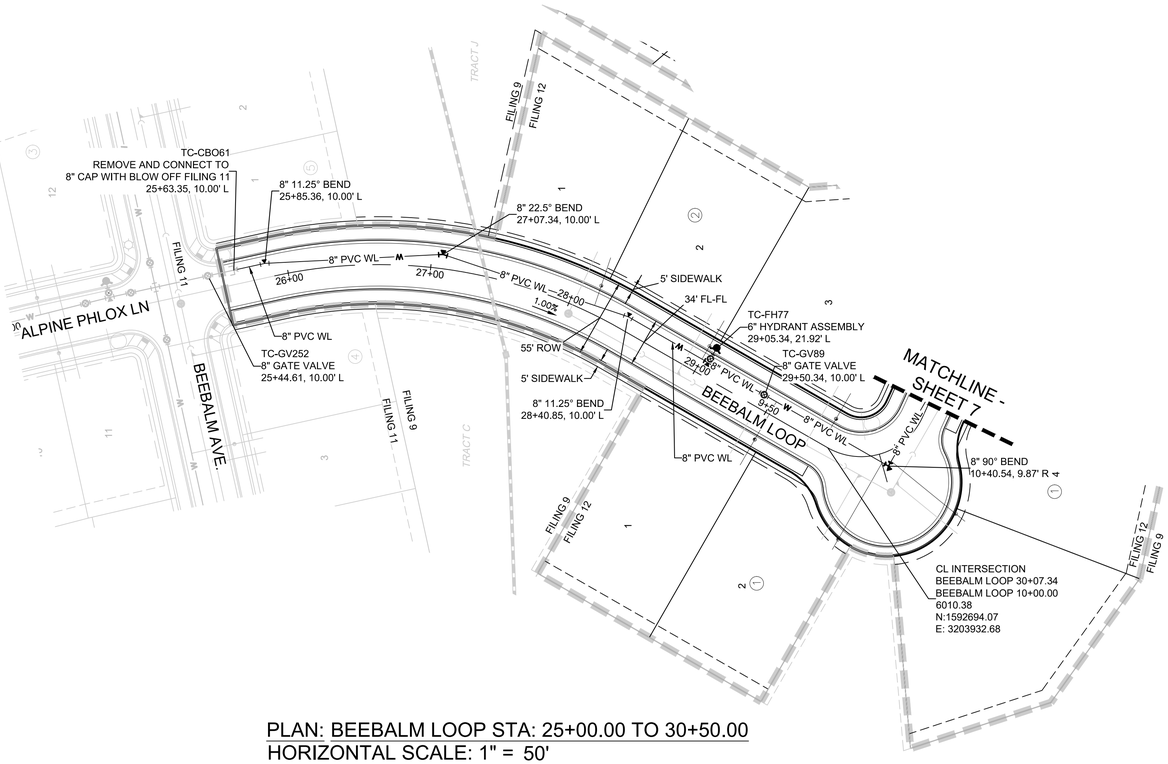
HR 935 LLC
7353 South Alton Way
CENTENNIAL, CO 80112

TRAILS AT CROWFOOT
FILING 12 CONSTRUCTION DRAWINGS
SANITARY SEWER PLAN AND PROFILE
BEEBALM LOOP

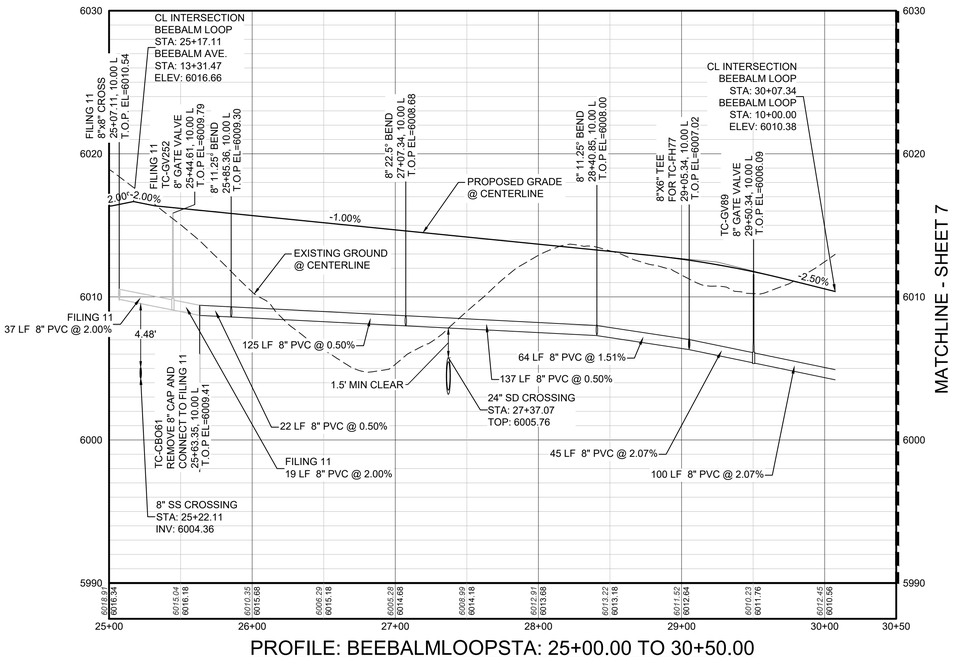
SCALE:	AS SHOWN	FILE NO:	81302837O1
DRAWN BY:	JLR		
CHECKED BY:	JJJ		
DATE:	SEPTEMBER 2017		
SHEET NUMBER	5		

No.	Revisions	Date	Init.	Appr.	Date

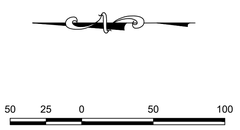
N:\PROJECTS\HESS RANCH\CAD\ENGINEERING\SHEET SETS\CD'S\F12\PARKER WATER AND SANITATION\SANITARY PLAN AND PROFILE\F12 BEEBALM WAY SANITARY.DWG, RHROWLAND, 6/17/2021 9:42 AM



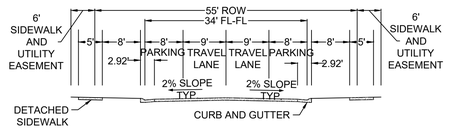
PLAN: BEEBALM LOOP STA: 25+00.00 TO 30+50.00
HORIZONTAL SCALE: 1" = 50'



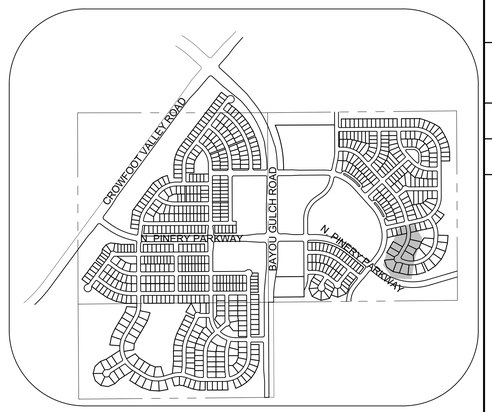
PROFILE: BEEBALMLOOPSTA: 25+00.00 TO 30+50.00
HORIZONTAL: 1" = 50'
VERTICAL: 1" = 5'



SCALE: 1" = 50'



RESIDENTIAL LOCAL



KEYMAP
N.T.S.

LEGEND

BLOCK NUMBER	PROPOSED RANGE POINT
LOT TYPE	CENTERLINE
LOT NUMBER	RIGHT-OF-WAY
PROPOSED BUTTERFLY VALVE	PROPERTY LINE
PROPOSED CAP WITH END OF LINE BLOWOFF	EDGE OF PAVEMENT
PROPOSED REDUCER	PROPOSED DIRECTION OF FLOW
PROPOSED VALVE	PROPOSED SLOPE & DIRECTION
PROPOSED FIRE HYDRANT	EXISTING 5' CONTOUR
PROPOSED WL FITTING WITH THRUST BLOCK	EXISTING 1' CONTOUR
PROPOSED FLARED END SECTION	PROPOSED 5' CONTOUR
PROPOSED LOW POINT BLOW-OFF	PROPOSED 1' CONTOUR
PROPOSED AIR VALVE	PROPOSED STORM DRAIN
FUTURE PHASE VALVE	PROPOSED SEWER LINE WITH MANHOLE
FUTURE FIRE HYDRANT	PROPOSED SEWER LATERAL
PROPOSED LIGHT POLE	PROPOSED WATER LINE
PROPOSED SIDEWALK	PROPOSED WATER LATERAL W/ METER
PROPOSED SIDEWALK RAMP	SECTION LINE
EXISTING ELEVATION	FILING BOUNDARY
PROPOSED DESIGN ELEVATION	EXISTING FIBER OPTIC LINE
PROPOSED STORM DRAIN INLET	EXISTING OVERHEAD POWER
PROPOSED STORM DRAIN MANHOLE	EXISTING TELEPHONE LINE
	PWSD EASEMENT
	TYP. EASEMENT

ABBREVIATIONS

AD	ANGLE DIFFERENCE	MH	MANHOLE
AV	AIR VAC RELEASE VALVE	N.T.S.	NOT TO SCALE
BVC	BEGIN VERTICAL CURVE	PVC	POLYVINYL CHLORIDE
BVP	BEGIN VERTICAL PROFILE	PVI	PT. OF VERTICAL INTERSECTION
CBO	CAP WITH BLOW OFF	PVT	POINT OF VERTICAL TANGENT
CRR	CURB RETURN RADIUS	RCBC	REINFORCED CONCRETE BOX CULVERT
EL	ELEVATION	RCP	REINFORCED CONCRETE PIPE
EP	EDGE OF PAVEMENT	ROW	RIGHT OF WAY
EVC	END VERTICAL CURVE	SC	SANITARY CAP
EVP	END VERTICAL PROFILE	SD	STORM DRAIN
FG	FINISHED GROUND	SL	SECTION LINE
FH	FIRE HYDRANT	SS	SANITARY SEWER
FL	FLOW LINE	STA	STATION
GV	GATE VALVE	T.O.P.	TOP OF PIPE
HCR	HANDICAP CURB RAMP	UE	UTILITY EASEMENT
HP	HIGH POINT	VC	VERTICAL CURVE
INV	INVERT	WL	WATER LINE
K	CURVATURE COEFFICIENT	WLC	WATER LINE CONNECTION
LF	LINEAR FEET	WSE	WATER SURFACE ELEVATION

1. SEE SHEET 3 FOR WATER SERVICE TABLES

CALL 811
TWO WORKING DAYS
BEFORE YOU DIG
UNCC 1-800-922-1987
UTILITY NOTIFICATION CENTER OF COLORADO

BENCHMARK
DOUGLAS COUNTY CONTROL POINT KNOWN AS 1.060032, BEING A 3-1/4" ALUMINUM CAP, BEING LOCATED IN THE SOUTHWEST QUARTER OF SECTION 33, TOWNSHIP 6 SOUTH, RANGE 66 WEST OF THE SIXTH PRINCIPAL MERIDIAN, HAVING A PUBLISHED ELEVATION OF 1799.2870 METERS (5903.13 FEET) NAVD '88 DATUM.

BASIS OF BEARINGS:
THE EAST LINE OF THE NORTHEAST QUARTER OF SAID SECTION 9 BEING MONUMENTED AT THE NORTHEAST CORNER OF SAID SECTION 9 BY A 3-1/4" ALUMINUM CAP STAMPED LS 23053 AND AT THE EAST QUARTER CORNER OF SAID SECTION 9 BY A 2-1/2" ALUMINUM CAP STAMPED LS 6935 BEING CONSIDERED TO BEAR SOUTH 00°15'06" EAST, 2648.70 FEET.

PREPARED UNDER THE SUPERVISION OF
COLORADO LICENSED BRIAN P. WILSON 0050067 PROFESSIONAL ENGINEER
6-30-21
BRIAN P. WILSON
COLORADO P.E. 0050067

No.	Revisions	Date	Init.	Appr.	Date

CVL
10333 E. Dry Creek Rd.
Suite 240
Englewood, CO 80112
Tel:720.482.9526
www.cvlhs.net
a Westwood team

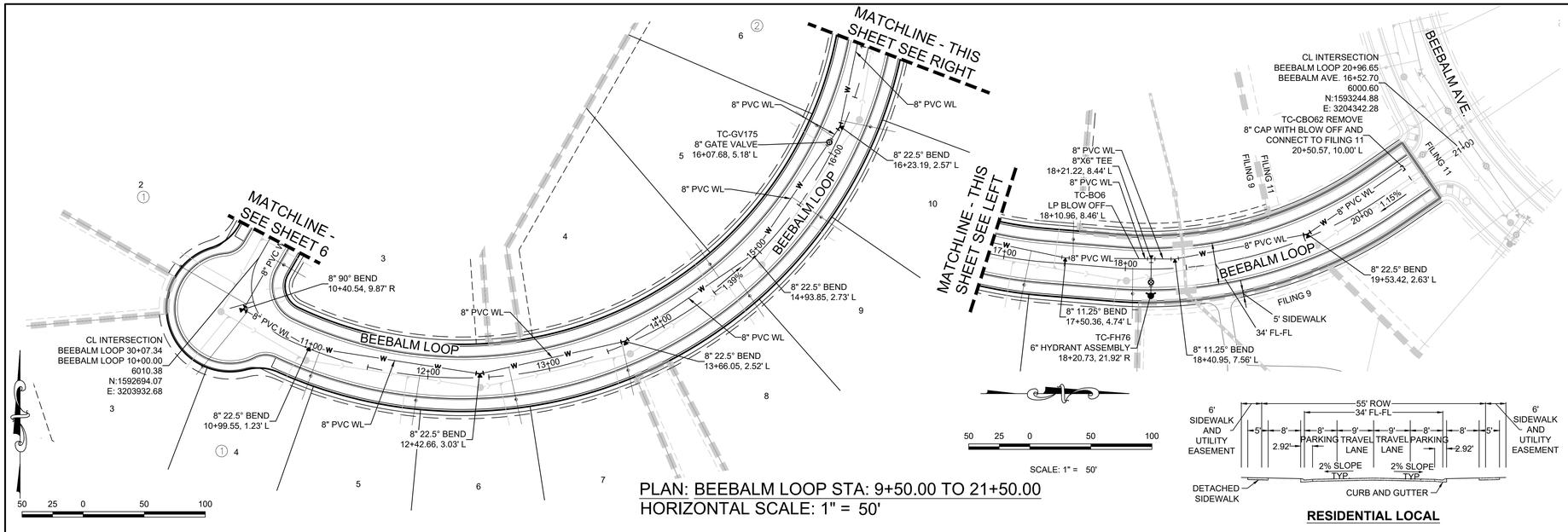
HR 935 LLC
7353 South Alton Way
CENTENNIAL, CO 80112

TRAILS AT CROWFOOT
FILING 12 CONSTRUCTION DRAWINGS
WATER PLAN & PROFILE
BEEBALM LOOP

DRAWN BY:	RHR	SCALE:	AS SHOWN
CHECKED BY:	JJJ	FILE NO:	81302837701
DATE:	SEPTEMBER 2017		

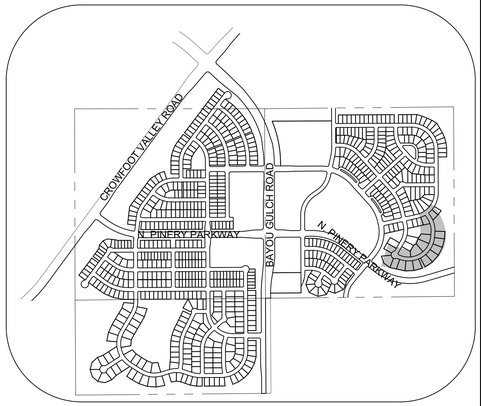
SHEET NUMBER 6

N:\PROJECTS\HESS RANCH\CAD\ENGINEERING\SHEET SETS\CD'S\F12\PARKER WATER AND SANITATION\WATER PLAN AND PROFILE\F12 BEEBALM WAY WATER.DWG, RHROWLAND, 6/17/2021 10:57 AM



PLAN: BEEBALM LOOP STA: 9+50.00 TO 21+50.00
HORIZONTAL SCALE: 1" = 50'

RESIDENTIAL LOCAL



KEYMAP
N.T.S.

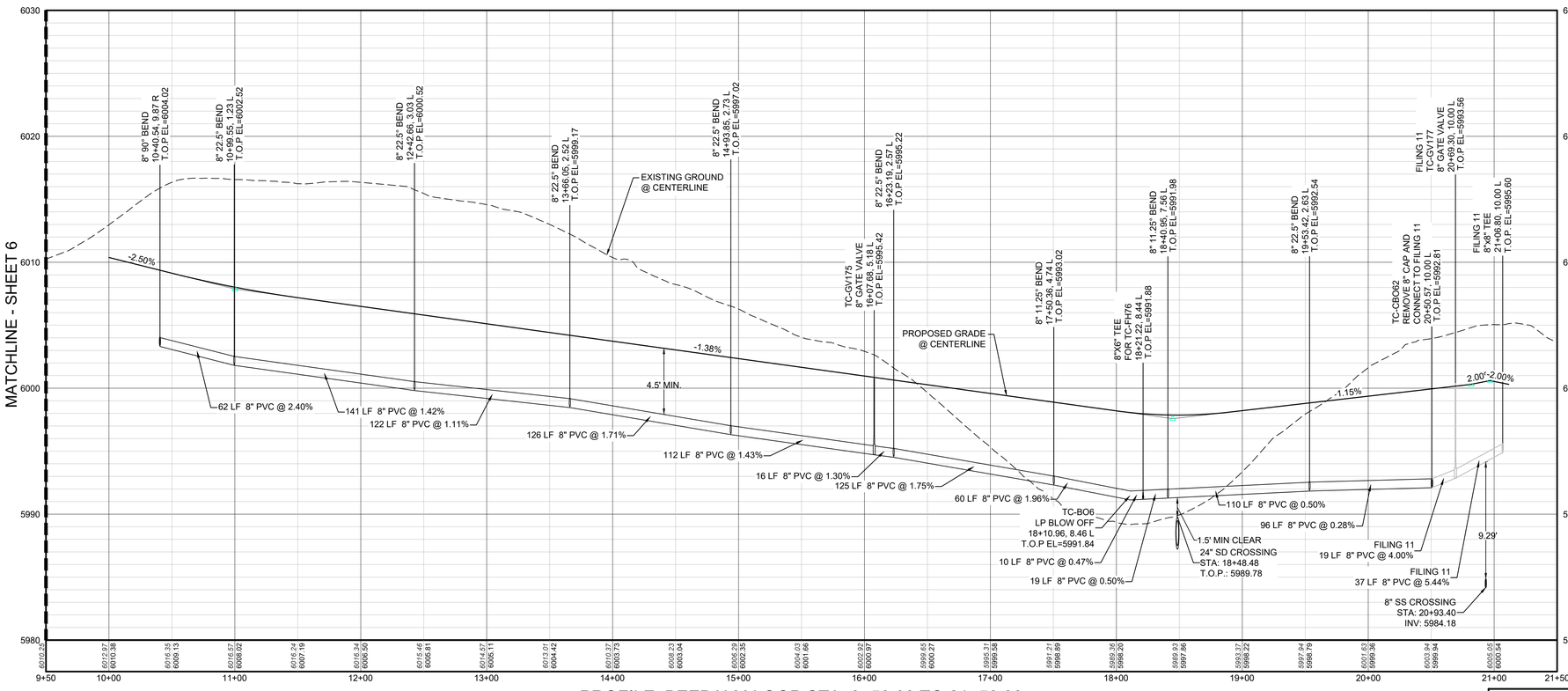
LEGEND

- BLOCK NUMBER
- LOT TYPE
- LOT NUMBER
- PROPOSED BUTTERFLY VALVE
- PROPOSED CAP WITH END OF LINE BLOWOFF
- PROPOSED REDUCER
- PROPOSED VALVE
- PROPOSED FIRE HYDRANT
- PROPOSED WL FITTING WITH THRUST BLOCK
- PROPOSED FLARED END SECTION
- PROPOSED LOW POINT BLOW-OFF
- PROPOSED AIR VALVE
- FUTURE PHASE VALVE
- FUTURE FIRE HYDRANT
- PROPOSED LIGHT POLE
- PROPOSED SIDEWALK
- PROPOSED SIDEWALK RAMP
- 10.00 EXISTING ELEVATION
- 10.00 PROPOSED DESIGN ELEVATION
- PROPOSED STORM DRAIN INLET
- PROPOSED STORM DRAIN MANHOLE
- PROPOSED RANGE POINT
- CENTERLINE
- RIGHT-OF-WAY
- PROPERTY LINE
- EDGE OF PAVEMENT
- PROPOSED DIRECTION OF FLOW
- 1.0% PROPOSED SLOPE & DIRECTION
- 5615 EXISTING 5' CONTOUR
- 5616 EXISTING 1' CONTOUR
- 5620 PROPOSED 5' CONTOUR
- 5607 PROPOSED 1' CONTOUR
- PROPOSED STORM DRAIN
- PROPOSED SEWER LINE WITH MANHOLE
- PROPOSED SEWER LATERAL
- 8"W PROPOSED WATER LINE
- PROPOSED WATER LATERAL W/ METER
- SECTION LINE
- FILING BOUNDARY
- FO EXISTING FIBER OPTIC LINE
- OH EXISTING OVERHEAD POWER
- TEL EXISTING TELEPHONE LINE
- PWSD EASEMENT
- TYP. EASEMENT

ABBREVIATIONS

AD	ANGLE DIFFERENCE	MH	MANHOLE
AV	AIR VAC RELEASE VALVE	N.T.S.	NOT TO SCALE
BVC	BEGIN VERTICAL CURVE	PVC	POLYVINYL CHLORIDE
BVP	BEGIN VERTICAL PROFILE	PVI	PT. OF VERTICAL INTERSECTION
CBO	CAP WITH BLOW OFF	PVT	POINT OF VERTICAL TANGENT
CRR	CURB RETURN RADIUS	RCBC	REINFORCED CONCRETE BOX CULVERT
EL	ELEVATION	RCP	REINFORCED CONCRETE PIPE
EP	EDGE OF PAVEMENT	ROW	RIGHT OF WAY
EVC	END VERTICAL CURVE	SC	SANITARY CAP
EVP	END VERTICAL PROFILE	SD	STORM DRAIN
FG	FINISHED GROUND	SL	SECTION LINE
FH	FIRE HYDRANT	SS	SANITARY SEWER
FL	FLOW LINE	STA	STATION
GV	GATE VALVE	T.O.P.	TOP OF PIPE
HCR	HANDICAP CURB RAMP	UE	UTILITY EASEMENT
HP	HIGH POINT	VC	VERTICAL CURVE
INV	INVERT	WL	WATER LINE
K	CURVATURE COEFFICIENT	WLC	WATER LINE CONNECTION
LF	LINEAR FEET	WSE	WATER SURFACE ELEVATION

1. SEE SHEET 3 FOR WATER SERVICE TABLES



PROFILE: BEEBALM LOOP STA: 9+50.00 TO 21+50.00
HORIZONTAL: 1" = 50'
VERTICAL: 1" = 5'

CALL 811
TWO WORKING DAYS
BEFORE YOU DIG
UNCC UTILITY NOTIFICATION CENTER OF COLORADO
1-800-922-1987

BENCHMARK
DOUGLAS COUNTY CONTROL POINT KNOWN AS 1.060032, BEING A 3-1/4" ALUMINUM CAP, BEING LOCATED IN THE SOUTHWEST QUARTER OF SECTION 33, TOWNSHIP 6 SOUTH, RANGE 66 WEST OF THE SIXTH PRINCIPAL MERIDIAN, HAVING A PUBLISHED ELEVATION OF 1799.2870 METERS (5903.13 FEET) NAVD '88 DATUM.

BASIS OF BEARINGS:
THE EAST LINE OF THE NORTHEAST QUARTER OF SAID SECTION 9 BEING MONUMENTED AT THE NORTHEAST CORNER OF SAID SECTION 9 BY A 3-1/4" ALUMINUM CAP STAMPED LS 23053 AND AT THE EAST QUARTER CORNER OF SAID SECTION 9 BY A 2-1/2" ALUMINUM CAP STAMPED LS 6935 BEING CONSIDERED TO BEAR SOUTH 00°15'06" EAST, 2648.70 FEET.

PREPARED UNDER THE SUPERVISION OF
COLORADO LICENSED BRIAN P. WILSON 0050067 PROFESSIONAL ENGINEER
6-30-21
BRIAN P. WILSON
COLORADO P.E. 0050067

No.	Revisions	Date	Init.	Appr.	Date

CVL a Westwood team
10333 E. Dry Creek Rd. Suite 240 Englewood, CO 80112 Tel: 720.482.9526 www.civilsolutions.com westwoodps.com

HR 935 LLC
7353 South Alton Way
CENTENNIAL, CO 80112

TRAILS AT CROWFOOT
FILING 12 CONSTRUCTION DRAWINGS
WATER PLAN & PROFILE
BEEBALM LOOP

SCALE: AS SHOWN
FILE NO: 8130283701
DRAWN BY: RHR
CHECKED BY: JJJ
DATE: SEPTEMBER 2017
SHEET NUMBER 7

N:\PROJECTS\HESS RANCH\CAD\ENGINEERING\SHEET SETS\CD'S\F12\PARKER WATER AND SANITATION\WATER PLAN AND PROFILE\F12 BEEBALM WAY WATER.DWG, RHROWLAND, 6/17/2021 9:47 AM

INSPECTION POLICY:

1. ALL SERVICE INSPECTIONS MUST BE SCHEDULED WITH THE DISTRICT OFFICE AT LEAST 24 HOURS IN ADVANCE OF THE REQUESTED INSPECTION.
2. IF THE CONTRACTOR IS NOT READY FOR INSPECTION WHEN THE INSPECTOR ARRIVES AT THE SITE, A RE-INSPECTION WILL HAVE TO BE SCHEDULED IN ACCORDANCE WITH NOTE 1 ABOVE AND A RE-INSPECTION FEE CHARGED.
3. SHOULD THE SERVICE LINES BE DAMAGED BY LATER CONSTRUCTION, AN INSPECTION OF THE REPAIR WILL BE REQUIRED IN ACCORDANCE WITH NOTES 1 AND 2 ABOVE.
4. THE CONTRACTOR SHALL LEAVE ALL PIPE AND FITTINGS EXPOSED FOR THE INSPECTOR TO OBSERVE. INSPECTORS WILL NOT ENTER ANY EXCAVATIONS TO CHECK MATERIALS. THE TOP LAYER OF BEDDING CAN BE ADDED AFTER THE INSPECTION HAS BEEN COMPLETED.
5. ALL EXCAVATIONS SHALL BE IN ACCORDANCE WITH OSHA STANDARDS.
6. LOTS WITHOUT BULDING ADDRESSES OR LOT AND BLOCK NUMBERS BEFORE DISTRICT INSPECTION OR METER SET WILL FAIL AUTOMATICALLY.
7. CONTRACTOR MUST BE PRESSENT AT TIME OF INSPECTION UNLESS COORDINATED WITH DISTRICT INSPECTOR.

INSTALLATION NOTES:

SEWER

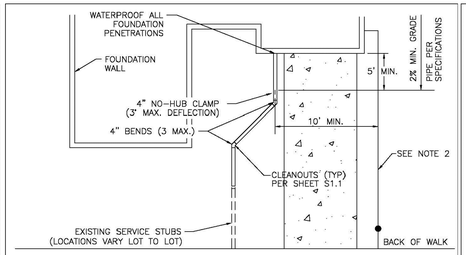
1. ACCEPTABLE PIPE MATERIALS ARE TO BE SDR 35 PVC PIPE, ABS PIPE AND PVC SCHD 40 PIPE. APPROVED BEDDING IS TO BE SQUEEGEE.
2. NO-HUB CLAMPS SHALL BE USED TO JOIN 2 MALE PIPE ENDS WITH A MAXIMUM DEFLECTION OF 3°.
3. MINIMUM GRADE SHALL BE 2%.
4. INSTALLATION SHALL INCLUDE NO MORE THAN 3 BENDS. 90° BENDS ARE NOT ALLOWED. SOLVENT WELDED PIPE WILL NOT BE ALLOWED.
5. CLEAN-OUTS SHALL BE INSTALLED AT 100' INTERVALS AND EVERY CHANGE IN DIRECTION. CLEAN-OUTS ARE NOT REQUIRED FOR SERVICES LESS THAN 100' UNLESS THERE ARE CHANGES IN DIRECTION. PROVIDE DUAL CLEAN-OUT WITHIN 5 FEET OF FOUNDATION.
6. STRESSING OF THE PIPE BETWEEN FITTINGS WILL NOT BE ALLOWED.
7. SEWER SERVICE LINE SHALL NOT BE LOCATED UNDER CONCRETE SURFACE.
8. ALL SERVICES WILL BE PERMANANTELY MARKED ON CURB FACE AS FOLLOWS:
   "X" FOR SANITARY SEWER SERVICE
   "V" FOR WATER SERVICES

PARKER WATER & SANITATION DISTRICT

DISTRICT POLICIES & INSTALLATION NOTES FOR SEWER SERVICES

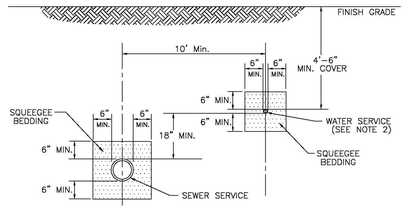
SCALE: NONE	DATE: 2/96
APPROVED: PVR	01/02 10/16 1/08 1/16
DIRECTOR OF ENGINEERING	

2016 REVISION — SHEET S1.1



TYPICAL SERVICES PLAN VIEW

NTS



TYPICAL SERVICES SECTION

NTS

NOTE

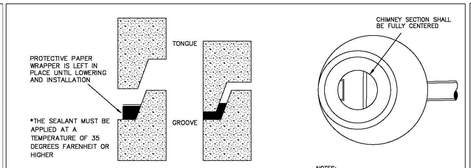
1. SEE SHEET S1.1 FOR DISTRICT POLICIES AND INSTALLATION NOTES.
2. TYPICAL WATER SERVICES SHOWN ON SHEET W1.2 IN WATER DETAILS.

PARKER WATER & SANITATION DISTRICT

TYPICAL SEWER SERVICES

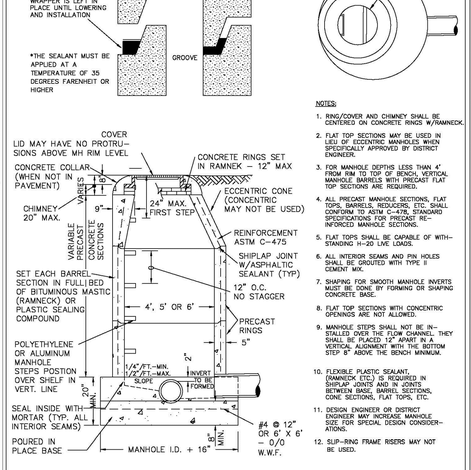
SCALE: NONE	DATE: 2/96
APPROVED: PVR	2/00 01/02 01/16 10/16
DIRECTOR OF ENGINEERING	

2016 REVISION — SHEET S1.2



NOTES:

1. RING/COVER AND CHIMNEY SHALL BE CENTERED ON CONCRETE RINGS W/RAMNECK.
2. FLAT TOP SECTIONS MAY BE USED IN LIEU OF ECCENTRIC MANHOLES WHEN SPECIFICALLY APPROVED BY DISTRICT ENGINEER.
3. FOR MANHOLE DEPTHS LESS THAN 4' FROM RIM TO TOP OF BENCH, VERTICAL MANHOLE BARRELS WITH PRECAST FLAT TOP SECTIONS ARE REQUIRED.
4. ALL PRECAST MANHOLE SECTIONS, FLAT TOPS, BARRELS, REDUCERS, ETC. SHALL CONFORM TO ASTM C-478, STANDARD SPECIFICATIONS FOR PRECAST REINFORCED MANHOLE SECTIONS.
5. FLAT TOPS SHALL BE CAPABLE OF WITHSTANDING H-20 LIVE LOADS.
6. ALL INTERIOR SEAMS AND PIN HOLES SHALL BE GROUTED WITH TYPE II CEMENT MIX.
7. SHAPING FOR SMOOTH MANHOLE INVERTS MUST BE DONE BY FORMING OR SHAPING CONCRETE BASE.
8. FLAT TOP SECTIONS WITH CONCENTRIC OPENINGS ARE NOT ALLOWED.
9. MANHOLE STEPS SHALL NOT BE INSTALLED OVER THE FLOW CHANNEL. THEY SHALL BE PLACED 12" APART IN A VERTICAL ALIGNMENT WITH THE BOTTOM STEP 8" ABOVE THE BENCH MINIMUM.
10. FLEXIBLE PLASTIC SEALANT (RAMNECK, ETC.) IS REQUIRED IN SHIPLAP JOINTS BETWEEN CONCRETE SECTIONS, CONE SECTIONS, FLAT TOPS, ETC.
11. DESIGN ENGINEER OR DISTRICT ENGINEER MAY INCREASE MANHOLE SIZE FOR SPECIAL DESIGN CONSIDERATIONS.
12. SLIP-RING FRAME RISERS MAY NOT BE USED.



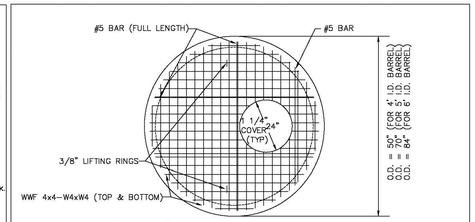
PIPE I.D.	MANHOLE I.D.
18" & SMALLER	4'-0"
21" TO 48"	5'-0"
54"	6'-0"
60" & LARGER	SPECIAL DESIGN

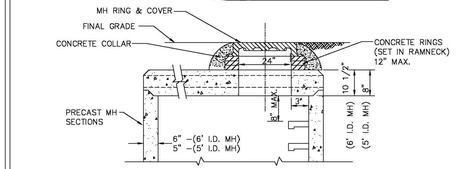
PARKER WATER & SANITATION DISTRICT

PARKER MANHOLE ECCENTRIC CONE

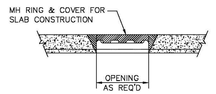
SCALE: NONE	DATE: 2/96
APPROVED: PVR	4/01 10/16 01/02 1/08 1/16
DIRECTOR OF ENGINEERING	

2016 REVISION — SHEET S3.1





FLAT TOP SECTION w/ECCENTRIC OPENING
5' & 6' I.D. MANHOLES



SECTION
(NON-ADJUSTABLE RING & COVER TO BE CAST IN FLAT TOP)

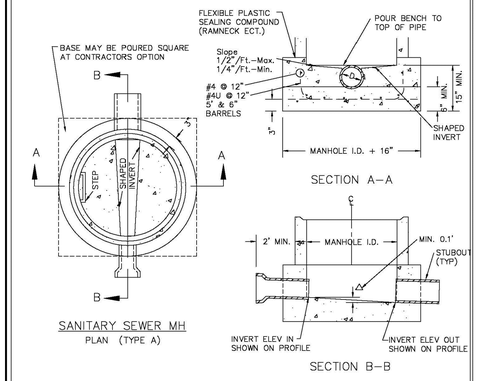
ALTERNATE RING & COVER
(TO BE USED ONLY WHEN SPECIFICALLY AUTHORIZED.)

PARKER WATER & SANITATION DISTRICT

PRECAST MANHOLE - 5' & 6' I.D. WITH ECCENTRIC CONE

SCALE: NONE	DATE: 2/96
APPROVED: PVR	01/02 01/16 10/16
DIRECTOR OF ENGINEERING	

2016 REVISION — SHEET S3.3



SANITARY SEWER MH
PLAN (TYPE A)

NOTES:

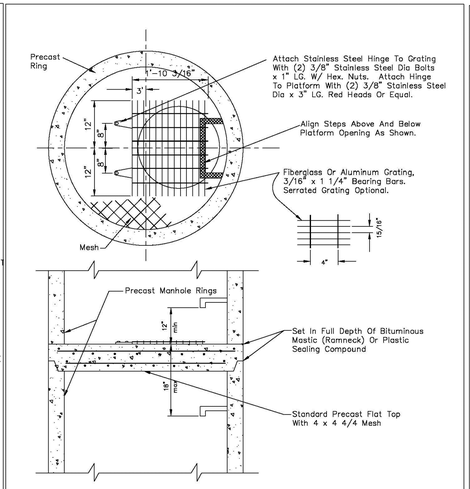
1. Manhole barrel min. thickness to be 5".
2. Shaping for smooth manhole inverts may be done by forming or shaping with cement mortar (San. Sewer).
3. The manhole steps shall conform to District Standards and Specifications.
4. Precast sections to conform to A.S.T.M C-478.
5. All dead-end manholes, that call out a stub out, shall be thru at 0.40% minimum slope.
6. Stub outs shall extend 2'-0" minimum past manhole O.D. and be satisfactorily plugged.
7. Reinforcing in base required for manhole.
8. Slope of bench = 1/2"/Ft.-Max. 1/4"/Ft.-Min.
9. Δ = invert drop thru MH (if Δ > 18", outside drop MH required). Min. 0.1' for all straight through MH and 0.2' for all angled MH.

PARKER WATER & SANITATION DISTRICT

CAST-IN-PLACE MANHOLE BASE DETAIL

SCALE: NONE	DATE: 2/96
APPROVED: PVR	01/02 01/16 10/16
DIRECTOR OF ENGINEERING	

2016 REVISION — SHEET S3.5



NOTES:

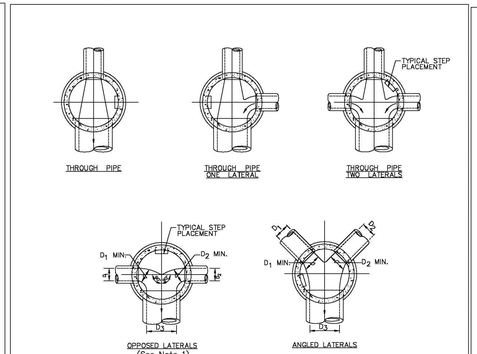
1.1 Maximum distance between platforms shall be 15" vertically.
1.2 All hardware used inside a manhole shall be stainless steel.
1.3 Manholes over 20' deep shall submit structural calculations on base and wall sizing.

PARKER WATER & SANITATION DISTRICT

INTERMEDIATE PLATFORM FOR MANHOLES OVER 20' DEPTH

SCALE: NONE	DATE: 2/96
APPROVED: PVR	2/00 1/16 10/16
DIRECTOR OF ENGINEERING	

2016 REVISION — SHEET S3.6



NOTES:

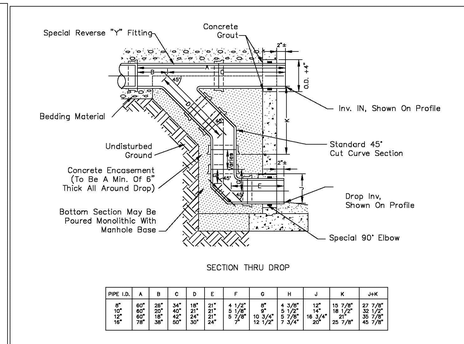
1. Manhole shall be coated using bituminous mastic (ramneck) or plastic sealing compound.

PARKER WATER & SANITATION DISTRICT

TYPICAL BASE CHANNELIZATION DETAILS

SCALE: NONE	DATE: 2/96
APPROVED: PVR	01/16 10/16
DIRECTOR OF ENGINEERING	

2016 REVISION — SHEET S3.7



PIPE I.D.	A	B	C	D	E	F	G	H	J	K	J+K
8"-15"	30"	18"	8"	12"	30°	3 1/2"	8"	3 1/2"	11°	19 7/8"	22 7/8"
	36"	18"	8"	12"		3 7/8"	9"	3 7/8"		20"	23 7/8"
18"-24"	36"	18"	8"	12"	45°	5 1/4"	10 3/4"	5 1/4"	16 3/4°	20"	36 7/8"
	48"	24"	8"	12"		5 3/4"	12 1/2"	5 3/4"			45 7/8"

NOTES:

1. Vit Clay Pipe & fittings (A.S.T.M. C-700) shown, details similar for all other pipe.
2. Diameter of drop shall not be less than the line pipe diameter.
3. For 18" diameter and larger, outside drop detail shall be a special design.
4. Manhole shall be coated using bituminous mastic (ramneck) or plastic sealing compound.

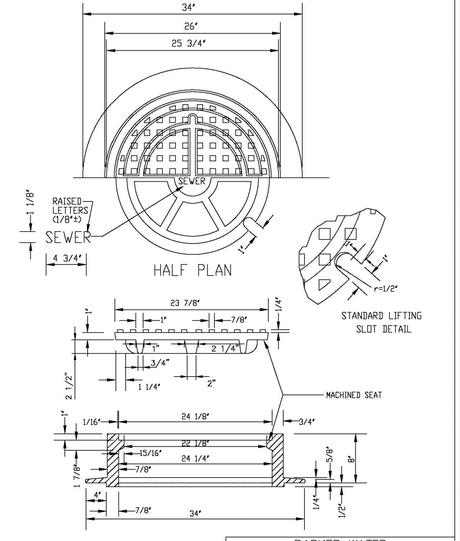
OUTSIDE DROP MANHOLE CONSTRUCTION

PARKER WATER & SANITATION DISTRICT

OUTSIDE DROP MANHOLE CONSTRUCTION

SCALE: NONE	DATE: 2/96
APPROVED: PVR	01/16 10/16
DIRECTOR OF ENGINEERING	

2016 REVISION — SHEET S3.8



NOTE:

1. Casting Specifications: ASTM A-48 With A Minimum Tensile Strength Of 25 KSI (Class 25)
2. All Casting To Be Dipped In Asphalt Base Paint (Or Approved Equal).
3. No other manhole lids will be accepted without prior approval from the District Engineer.

PARKER WATER & SANITATION DISTRICT

24" DIAMETER RING AND COVER

SCALE: NONE	DATE: 2/96
APPROVED: PVR	01/16 10/16
DIRECTOR OF ENGINEERING	

2016 REVISION — SHEET S3.9

CALL 811
TWO WORKING DAYS
BEFORE YOU DIG
1-800-922-1987
UNCC UTILITY NOTIFICATION CENTER OF COLORADO

N:\PROJECTS\HESS RANCH\CAD\ENGINEERING\SHEET SETS\CD'S\F12\PARKER WATER AND SANITATION\F12 SANITARY SEWER DETAILS.DWG, BRIANW, 6/17/2021 9:49 AM

No.	Revisions	Date	Init.	Appr.	Date

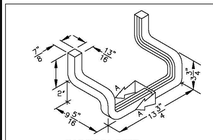
CVL
10333 E. Dry Creek Rd.
Suite 240
Englewood, CO 80112
Tel:720.482.9526
www.civilvl.net
a Westwood team

HR 935 LLC
7353 South Alton Way
CENTENNIAL, CO 80112

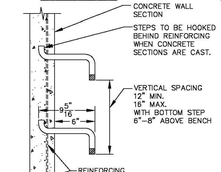
TRAILS AT CROWFOOT
FILING 12 CONSTRUCTION DRAWINGS
SANITARY SEWER DETAIL

SCALE: AS SHOWN	FILE NO: 8130283701
DRAWN BY: JF	
CHECKED BY: JJJ	
DATE: SEPTEMBER 2017	

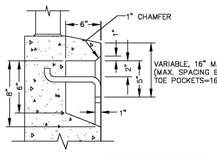
SHEET NUMBER 8



ALUMINUM STEP

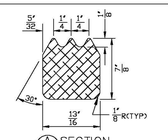


TYPICAL INSTALLATION



TOE POCKET DETAILS

STANDARD EXTRUDED ALUMINUM MANHOLE STEP



A SECTION

NOTES:

1.1 ALUMINUM ALLOY SPECIFICATIONS
- a. FED. SPEC. QQ-A-200/8 (ALUMINUM-MAGNESIUM-SILICATE ALLOY)
- b. MINIMUM TENSILE STRENGTH= 38,000 p.s.i.
- c. MINIMUM YIELD STRENGTH= 35,000 p.s.i.
- d. MINIMUM ELONGATION=10% IN 2

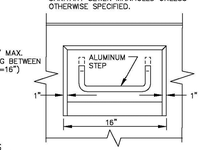
1.2 MINIMUM LOAD CAPACITY (APPLIED AT CENTER OF STEP
- a. 1000 lb. WITH 6" PROJECTION FROM WALL.
- b. 1500 lb. WITH 4" PROJECTION FROM WALL.

1.3 WEIGHT PER STEP=2.23 POUNDS

1.4 STEPS TO BE CAST, UNALTERED, IN MAN-HOLE WALL IN STRAIGHT LINE, VERTICALLY, AT THE SAME TIME THE BARREL OR CONE SECTIONS ARE CAST.

1.5 VERTICAL SPACING BETWEEN STEPS SHALL BE CONSISTENT IN EACH INDIVIDUAL MANHOLE.

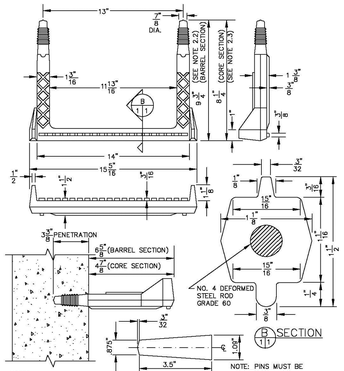
1.6 TOE POCKETS ARE REQUIRED IN STORM SEWER MANHOLES IF TOP OF BENCH IS MORE THAN 18" ABOVE INVERT. TOE POCKETS ARE NOT REQUIRED IN SANITARY SEWER MANHOLED UNLESS OTHERWISE SPECIFIED.



PARKER WATER & SANITATION DISTRICT	
STANDARD EXTRUDED ALUMINUM MANHOLE STEP	
SCALE: NONE	DATE: 2/96
APPROVED: PVR	01/16 10/16
DIRECTOR OF ENGINEERING	

2016 REVISION

SHEET S3.10



NOTES:

2.1 ASTM SPECIFICATIONS:
- a) ASTM C-478
- b) ASTM A-615 GRADE 60 (STEEL ROD)
- c) ASTM 2146-69, TYPE II, GRADE 16906 (POLYPROPYLENE)

2.2 STEPS INSTALLED IN MANHOLE BARREL SECTIONS OR VERTICAL WALLS OF STRUCTURE SHALL HAVE A 9-3/4 INCH LEG AND SHALL PROJECT FROM THE WALL 6-5/8 INCHES.

2.3 STEPS INSTALLED IN MANHOLE CONE SECTIONS SHALL HAVE AN 8-1/4 INCH LEG AND SHALL PROJECT FROM THE WALL 4-7/8 INCHES.

2.4 ALL STEPS SHALL HAVE A PENETRATION DEPTH INTO THE WALL OF 3-3/8 INCHES.

2.5 STEPS SHALL BE INSTALLED BY THE "PRESS-FIT" METHOD UTILIZING A SPECIALLY TAPERED PIN TO FORM THE INSERT HOLE AS SHOWN.

2.6 INSTALLED STEPS SHALL BE CAPABLE OF WITHSTANDING A PULL OUT FORCE OF 2500 P.S.I. PER LEG FOR A MINIMUM PERIOD OF TWO MINUTES.

2.7 STEPS SHALL BE INSTALLED BY THE "PRESS-FIT" METHOD EXCLUSIVELY FOLLOWING MANUFACTURER'S RECOMMENDED PROCEDURE AND SHALL NOT BE GROUTED IN PLACE.

PIN FOR PRESS STEP

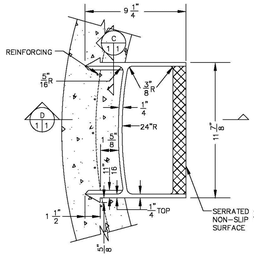
NOTE: PINS MUST BE SMOOTH AND CON-TINUOUSLY TAPERED.

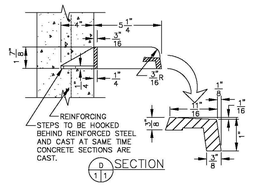
POLYPROPYLENE REINFORCED PLASTIC STEP

PARKER WATER & SANITATION DISTRICT	
POLYPROPYLENE REINFORCED PLASTIC MANHOLE STEP	
SCALE: NONE	DATE: 2/00
APPROVED: PVR	01/16 10/16
DIRECTOR OF ENGINEERING	

2016 REVISION

SHEET S3.11





CAST ALUMINUM MANHOLE STEP

NOTES:

3.1 THE CAST ALUMINUM MANHOLE STEP SHALL ONLY BE USED WHEN SPECIFIED ON THE DRAWINGS.

3.2 ALUMINUM ALLOY SPECIFICATIONS:
- a. ALLOY DESIGNATION ALMAG 35
- b. MIN. TENSILE STRENGTH= 40 K.S.I.
- c. MIN. YIELD STRENGTH= 20 K.S.I.
- d. MIN. SHEAR STRENGTH= 27.45 K.S.I.
- e. ELONGATION= 10% IN 2
- f. BRINELL HARDNESS= 70

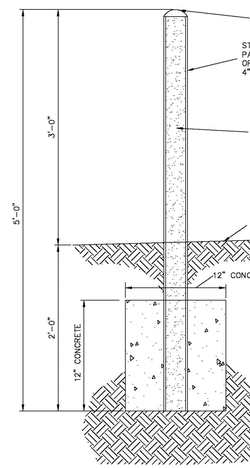
3.3 MINIMUM LOAD CAPACITY, STEP SPACING AND ALIGNMENT, TOE POCKET DETAILS AND OTHER APPLICABLE NOTES OR DETAILS SPECIFIED FOR EXTRUDED ALUMINUM MANHOLE STEP SHALL ALSO APPLY TO THIS STANDARD.

3.4 MIN. WT. = 2.0 lb.

PARKER WATER & SANITATION DISTRICT	
CAST ALUMINUM MANHOLE STEP	
SCALE: NONE	DATE: 2/96
APPROVED: PVR	01/16 10/16
DIRECTOR OF ENGINEERING	

2016 REVISION

SHEET S3.12



MARKER POST DETAIL

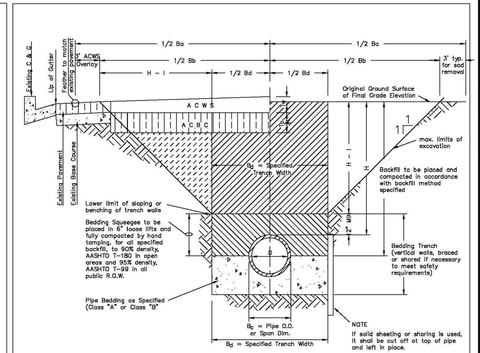
STEEL PIPE
STENCILED IDENTIFICATION MARKS ON POSTS SHALL FACE THE APPURTENANCE WITH 2" STENCILS INDICATING TYPE OF APPURTENANCE (MH, 12" VALVE, ETC.) AND THE DISTANCE IN FEET AND INCHES FROM POST.

REDWOOD POST
ROUTER LETTERS AND NUMBERS INTO POST. PAINT LETTERS AND NUMBERS BLACK.

PARKER WATER & SANITATION DISTRICT	
MARKER POST DETAIL	
SCALE: NONE	DATE: 2/96
APPROVED: PVR	2/00 10/16 4/01 1/08 1/16
DIRECTOR OF ENGINEERING	

2016 REVISION

SHEET S3.13



TYPICAL TRENCH DETAIL

B_b = Thickness of Asphaltic Concrete Base Course (A C B C)

T_w = Thickness of Asphaltic Concrete Wearing Surface (A C W S)

T_a = Total Asphalt Thickness (T_b + T_w)

B_c = Outside Pipe or Conduit Span Dimension

B_d = Specified Bedding Trench Width and Max Bedding Trench Width at a point 12" above Top of Pipe (See Note 2)

B_b = Max. Pay Width of Asphaltic Concrete Base Course (or Asphaltic Concrete Cold Mix) (See Note 3)

B_w = Max. Pay Width of Asphaltic Concrete Wearing Surface or Sod Replacement (See Note 3)

H = Depth of Surface to Top of Pipe

H-I= Depth from Surface to 1 ft. above Top of Pipe

TABLE II ASPHALT AND BASE COURSE REPLACEMENT SCHEDULE			
STREET WIDTH	ASPHALTIC BASE COURSE (T_b)	ASPHALTIC WEARING SURFACE (T_w)	TOTAL THICKNESS (T_a)
UP TO 36'	4"	2"	6"
36' TO 44'	4"	3"	7"
44' TO 48'	5"	3"	8"
WIDER THAN 48'	6"	3"	9"

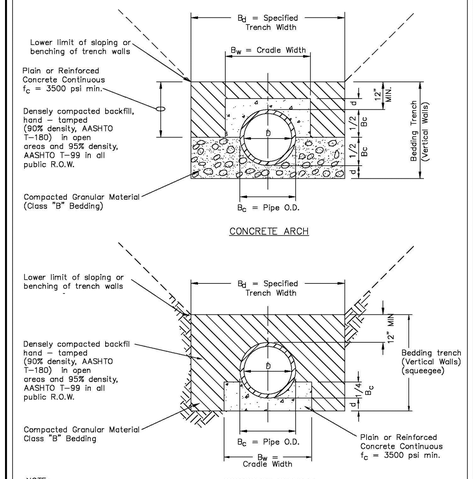
NOTES

1. *Sloping or benching of trench side walls, where permitted shall be in accordance with applicable Federal, State and Local safety regulations.*
2. *Trench shall be braced and shored as necessary to afford safe working conditions or to protect adjacent utilities, structures, etc.. Unless otherwise specified on the plans, no pavement will be removed, replacement or relocation of curb and gutter, sidewalks, structures, etc. outside the maximum limits of excavation as shown and the contractor shall be responsible for protection of same.*
3. *If dimension "B_b" is ≤ 5', then existing asphalt pavement shall be removed and replaced up to the gutter. Maximum asphalt pay widths, B_b & B_w shall then be based upon this actual width.*

PARKER WATER & SANITATION DISTRICT	
SEWER TRENCHING AND BEDDING DETAIL	
SCALE: NONE	DATE: 2/96
APPROVED: PVR	5/98 1/16 10/16
DIRECTOR OF ENGINEERING	

2016 REVISION

SHEET S4.1



NOTE:
The Design Engineer shall be responsible for structural design of the concrete cradle and/or concrete arch.

CLASS "A" BEDDING

TABLE III		
NOMINAL DIAMETER (D)	MINIMUM THICKNESS (d)	MIN. WIDTH OF CRADLE (B_w)
18" & smaller	6"	B_c + 8"
21" to 24"	8"	B_c + 8"
27" to 33"	8"	B_c + 8"
36" to 42"	10"	1.25 B_c
48" & larger	1/4 D	1.25 B_c

PARKER WATER & SANITATION DISTRICT	
TRENCHING AND BEDDING DETAIL – CLASS "A"	
SCALE: NONE	DATE: 2/96
APPROVED: PVR	1/16 10/16
DIRECTOR OF ENGINEERING	

2016 REVISION

SHEET S4.2

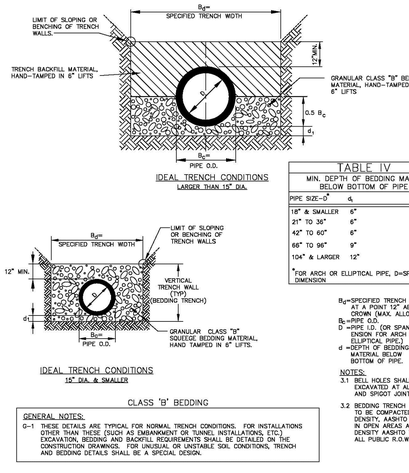


TABLE IV MIN. DEPTH OF BEDDING MAT'L. BELOW BOTTOM OF PIPE	
PIPE SIZE--D*	d_1
18" & SMALLER	6"
21" TO 36"	6"
42" TO 60"	6"
66" TO 96"	9"
104" & LARGER	12"

*FOR ARCH OR ELLIPTICAL PIPE, D=SPAN DIMENSION

B_d=SPECIFIED TRENCH WIDTH AT A POINT 12" ABOVE CROWN (MAX. ALLOWANCE)
B_c=PIPE O.D.
D =PIPE I.D. (OR SPAN DIM--ENSION FOR ARCH OR ELLIPTICAL PIPE.)
d =DEPTH OF BEDDING MATERIAL BELOW BOTTOM OF PIPE.

NOTES:
3.1 BELL HOLES SHALL BE EXCAVATED AT ALL BELL AND SPIGOT JOINTS.

3.2 BEDDING TRENCH BACKFILL TO BE COMPACTED TO 90% DENSITY, AASHTO T-180 IN OPEN AREAS AND 95% DENSITY AASHTO T-99 IN ALL PUBLIC R.O.W.

CLASS 'B' BEDDING

GENERAL NOTES:
G-1 THESE DETAILS ARE TYPICAL FOR NORMAL TRENCH CONDITIONS. FOR INSTALLATIONS OTHER THAN THESE (SUCH AS EMBANKMENT OR TUNNEL INSTALLATIONS, ETC.) EXCAVATION, BEDDING AND BACKFILL REQUIREMENTS SHALL BE DETAILED ON THE CONSTRUCTION DRAWINGS. FOR UNUSUAL OR UNSTABLE SOIL CONDITIONS, TRENCH AND BEDDING DETAILS SHALL BE A SPECIAL DESIGN.

PARKER WATER & SANITATION DISTRICT	
TRENCHING AND BEDDING CLASS "B"	
SCALE: NONE	DATE: 2/96
APPROVED: PVR	5/98 2/00 1/16 10/16
DIRECTOR OF ENGINEERING	

2016 REVISION

SHEET S4.3

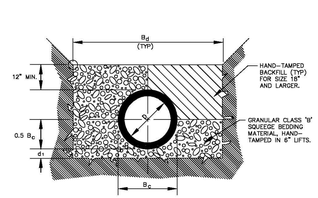


TABLE IV MIN. DEPTH OF BEDDING MAT'L. BELOW BOTTOM OF PIPE	
PIPE SIZE--D*	d_1
18" & SMALLER	6"
21" TO 36"	6"
42" TO 60"	6"
66" TO 96"	9"
104" & LARGER	12"

*FOR ARCH OR ELLIPTICAL PIPE, D=SPAN DIMENSION

B_d=SPECIFIED TRENCH WIDTH AT A POINT 12" ABOVE CROWN (MAX. ALLOWANCE)
B_c=PIPE O.D.
D =PIPE I.D. (OR SPAN DIM--ENSION FOR ARCH OR ELLIPTICAL PIPE.)
d =DEPTH OF BEDDING MATERIAL BELOW BOTTOM OF PIPE.

NOTES:
3.1 BELL HOLES SHALL BE EXCAVATED AT ALL BELL AND SPIGOT JOINTS.

3.2 BEDDING TRENCH BACKFILL TO BE COMPACTED TO 90% DENSITY, AASHTO T-180 IN OPEN AREAS AND 95% DENSITY AASHTO T-99 IN ALL PUBLIC R.O.W.

CLASS 'B' BEDDING

GENERAL NOTES:
G-1 THESE DETAILS ARE TYPICAL FOR NORMAL TRENCH CONDITIONS. FOR INSTALLATIONS OTHER THAN THESE (SUCH AS EMBANKMENT OR TUNNEL INSTALLATIONS, ETC.) EXCAVATION, BEDDING AND BACKFILL REQUIREMENTS SHALL BE DETAILED ON THE CONSTRUCTION DRAWINGS. FOR UNUSUAL OR UNSTABLE SOIL CONDITIONS, TRENCH AND BEDDING DETAILS SHALL BE A SPECIAL DESIGN.

PARKER WATER & SANITATION DISTRICT	
TRENCHING AND BEDDING CLASS "B"	
SCALE: NONE	DATE: 2/96
APPROVED: PVR	5/98 2/00 1/16 10/16
DIRECTOR OF ENGINEERING	

2016 REVISION

SHEET S4.4

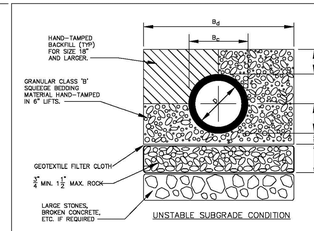


TABLE IV MIN. DEPTH OF BEDDING MAT'L. BELOW BOTTOM OF PIPE	
PIPE SIZE--D*	d_1
18" & SMALLER	6"
21" TO 36"	6"
42" TO 60"	6"
66" TO 96"	9"
104" & LARGER	12"

*FOR ARCH OR ELLIPTICAL PIPE, D=SPAN DIMENSION

B_d=SPECIFIED TRENCH WIDTH AT A POINT 12" ABOVE CROWN (MAX. ALLOWANCE)
B_c=PIPE O.D.
D =PIPE I.D. (OR SPAN DIM--ENSION FOR ARCH OR ELLIPTICAL PIPE.)
d =DEPTH OF BEDDING MATERIAL BELOW BOTTOM OF PIPE.

NOTES:
3.1 BELL HOLES SHALL BE EXCAVATED AT ALL BELL AND SPIGOT JOINTS.

3.2 BEDDING TRENCH BACKFILL TO BE COMPACTED TO 90% DENSITY, AASHTO T-180 IN OPEN AREAS AND 95% DENSITY AASHTO T-99 IN ALL PUBLIC R.O.W.

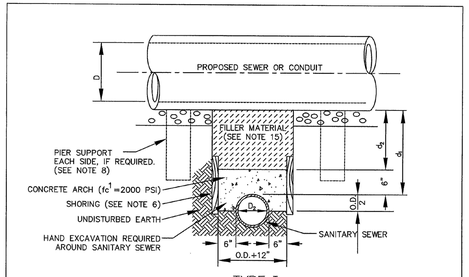
CLASS 'B' BEDDING

GENERAL NOTES:
G-1 THESE DETAILS ARE TYPICAL FOR NORMAL TRENCH CONDITIONS. FOR INSTALLATIONS OTHER THAN THESE (SUCH AS EMBANKMENT OR TUNNEL INSTALLATIONS, ETC.) EXCAVATION, BEDDING AND BACKFILL REQUIREMENTS SHALL BE DETAILED ON THE CONSTRUCTION DRAWINGS. FOR UNUSUAL OR UNSTABLE SOIL CONDITIONS, TRENCH AND BEDDING DETAILS SHALL BE A SPECIAL DESIGN.

PARKER WATER & SANITATION DISTRICT	
TRECHING AND BEDDING CLASS "B"	
SCALE: NONE	DATE: 2/96
APPROVED: PVR	5/98 2/00 1/16 10/16
DIRECTOR OF ENGINEERING	

2016 REVISION

SHEET S4.5



TYPE I

CONCRETE ENCASEMENT FOR SANITARY SEWERS

(CONCRETE ARCH)

GENERAL NOTES FOR TYPE I,II& III ENCASEMENT

1. CONCRETE TO BE CAST AGAINST UNDISTURBED SOIL OR SHORING IF OPTIONAL CONSTRUCTION JOINT AT 45° AND BOTTOM HALF OF ENCASEMENT IS POURED SEPARATELY, A LAYER OF SAND OR MORTAR SHALL BE PLACED BETWEEN BOTTOM OF SANITARY SEWER AND TOP OF CONCRETE.
2. LENGTH OF ENCASEMENT FOR:
   - (a) TYPE I & TYPE III ENCASEMENT SHALL EXTEND FULL TRENCH WIDTH EXCAVATED FOR PROPOSED SEWER OR CONDUIT.
   - (b) TYPE II ENCASEMENT SHALL EXTEND AT LEAST 10 FEET EACH SIDE OF WATER MAIN.
3. UNLESS OTHERWISE NOTED ON PLAN/PROFILE DRAWINGS, TYPE I, II & III ENCASEMENTS NEED NOT BE REINFORCED. REINFORCEMENT, IF REQUIRED, SHALL BE SPECIFIED AND DETAILED SEPARATELY ON PLAN & PROFILE DRAWINGS.
4. TYPE I, II OR III ENCASEMENTS ARE REQUIRED UNDER FOLLOWING CONDITIONS:
   - (a) TYPE I OR TYPE III IF $d_i \geq 18"$ ($d_i \leq 12"$) EXCEPT FOR SANITARY SEWER CROSSING OVER OR UNDER WATER MAINS.

     WATER MAINS AND $d_i \leq 24"$ ($d_i \leq 18"$)
   - (b) TYPE III IS REQUIRED FOR SANITARY SEWERS CROSSING OVER TOP OF WATER MAINS, REGARDLESS OF DIMENSION "d_i".
   - (c) EXCEPT FOR UNUSUAL CIRCUMSTANCES, WATER MAIN CROSSINGS, IF NO OTHER FEASIBLE CONDITIONS ARE ENCOUNTERED, TYPE I ENCASEMENT SHALL BE USED SATISFACTORY.
   - (d) IF THE SANITARY SEWER IS PVC PIPE OR CONSTRUCTED OF DUCTILE IRON PIPE (AWWA C-150 OR C-151), CONCRETE ENCASEMENT MAY NOT BE REQUIRED.
5. FILLER MATERIAL BETWEEN CONDUITS TO BE:
   - (a) APPROVED COMPRESSIBLE MATERIAL SUCH AS STYROFOAM, ETC. WHERE $d_i \leq 6"$
   - (b) COMPACTED CLASS "B" BEDDING IF d_i & $d_2 > 6"$ (IF d_i & $d_2 \leq 6"$ FOR TYPE III ENCASEMENT POUR CONCRETE ON UNDISTURBED SOIL)
6. SHORING OR SHEETING, IF USED, TO BE CUT OFF AT TOP OF ENCASEMENT.
7. THESE ENCASEMENT DETAILS MAY ALSO BE APPLICABLE FOR CONDUITS OTHER THAN STORM OR SANITARY SEWER INSTALLATIONS.
8. IN CERTAIN SITUATIONS WHERE CONDUIT DIAMETER "D" IS EXTREMELY LARGE, PIER SUPPORTS ON EACH SIDE OF SANITARY SEWER MAY ALSO BE REQUIRED. IF REQUIRED, SUPPORTS SHALL BE SPECIFIED AND DETAILED SEPARATELY ON PLAN AND PROFILE DRAWINGS.

PARKER WATER & SANITATION DISTRICT	
CONCRETE ENCASEMENT TYPE I	
SCALE: NONE	DATE: 2/96
APPROVED: JFN	
DISTRICT ENGINEER	

2008 REVISION

SHEET 6

10333 E. Dry Creek Rd.
Suite 240
Englewood, CO 80112
Tel: 720-482-9526
www.civilfirm.com
westwoodps.com

CIVIL
a Westwood team

No.	Revisions	Date	Init.	Appr.	Date

HR 935 LLC
7353 South Alton Way
CENTENNIAL, CO 80112

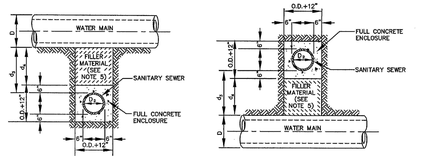
TRAILS AT CROWFOOT
FILING 12 CONSTRUCTION DRAWINGS
SANITARY SEWER DETAIL

SCALE: AS SHOWN
FILE NO: 8130283701
DRAWN BY: JF
CHECKED BY: JJJ
DATE: SEPTEMBER 2017

SHEET NUMBER 9

N:\PROJECTS\HSS RANCH\CAD\ENGINEERING\SHEET SETS\CD'S\F12\PARKER WATER AND SANITATION\F12 SANITARY SEWER DETAILS.DWG, BRIANW, 6/17/2021 9:49 AM

CALL 811
TWO WORKING DAYS
BEFORE YOU DIG
1-800-922-1987
UNCC UTILITY NOTIFICATION CENTER OF COLORADO



TYPE IIa
SANITARY SEWER CROSSING
UNDER WATER MAIN
IF d_3 > 2 ft., ENCASEMENT NOT REQUIRED

TYPE II b
SANITARY SEWER CROSSING
OVER TOP OF WATER MAIN
FULL ENCASEMENT REQUIRED REGARDLESS OF DEMENSION d_3.

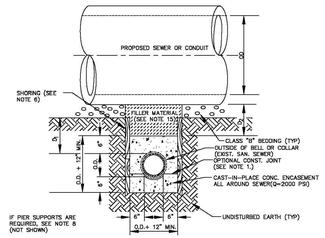
TYPE II
CONCRETE ENCASEMENT FOR SANITARY SEWERS CROSSING OVER OR UNDER WATER MAIN

GENERAL NOTES FOR TYPE I,II& III ENCASEMENT

1. CONCRETE TO BE CAST AGAINST UNDISTURBED SOIL OR SHORING. IF OPTIONAL CONSTRUCTION JOINT IS USED & BOTTOM HALF OF ENCASEMENT IS POURED SEPARATELY, A ONE INCH LAYER OF SAND OR MORTAR SHALL BE PLACED BETWEEN BOTTOM OF SANITARY SEWER AND TOP OF CONCRETE.
2. LENGTH OF ENCASEMENT FOR:
   (a) TYPE I & TYPE II ENCASEMENT SHALL EXTEND FULL TRENCH WIDTH EXCAVATED FOR PROPOSED SEWER OR CONDUIT.
   (b) TYPE II ENCASEMENT SHALL EXTEND AT LEAST 10 FEET EACH SIDE OF WATER MAIN.
3. UNLESS OTHERWISE NOTED ON PLAN/PROFILE DRAWINGS, TYPE I, II & III ENCASEMENTS NEED NOT BE REINFORCED. REINFORCEMENT, IF REQUIRED, SHALL BE SPECIFIED AND DETAILED SEPARATELY ON PLAN & PROFILE DRAWINGS.
4. TYPE I, II OR III ENCASEMENTS ARE REQUIRED UNDER FOLLOWING CONDITIONS:
   (a) TYPE I OR TYPE III IF $d_1 \leq 18"$ ($d_1 \leq 12"$) EXCEPT FOR SANITARY SEWER CROSSING OVER OR UNDER WATER MAINS.
   WATER MAINS AND $d_2 \leq 24"$ ($d_2 \leq 18"$)
   (c) TYPE IIb IS REQUIRED FOR SANITARY SEWERS CROSSING OVER TOP OF WATER MAINS, REGARDLESS OF DIMENSION "d_3".
   (d) EXCEPT FOR UNUSUAL CIRCUMSTANCES, WATER MAIN CROSSINGS, OR WHERE UNSTABLE SOIL CONDITIONS ARE ENCOUNTERED, TYPE I ENCASEMENT WILL NORMALLY BE SATISFACTORY.
   (e) IF THE SANITARY SEWER IS REPLACED OR CONSTRUCTED OF DUCTILE IRON PIPE (AWWA C-150 OR C-151), CONCRETE ENCASEMENT MAY NOT BE REQUIRED.
5. FILLER MATERIAL BETWEEN CONDUITS TO BE:
   (a) APPROVED COMPRESSIBLE MATERIAL SUCH AS STYROFOAM, ETC IF d_3 & $d_4 \leq 6"$.
   (b) COMPACTED CLASS "B" BEDDING IF d_3 & $d_4 > 6"$ (IF $d_4 > 6"$ FOR TYPE IIb ENCASEMENT POUR CONCRETE ON UNDISTURBED SOIL)
6. SHORING OR SHEETING, IF USED, TO BE CUT OFF AT TOP OF ENCASEMENT.
7. THESE ENCASEMENT DETAILS MAY ALSO BE APPLICABLE FOR CONDUITS OTHER THAN STORM OR SANITARY SEWER INSTALLATIONS.
8. IN CERTAIN SITUATIONS WHERE CONDUIT DIAMETER "D" IS EXTREMELY LARGE, PIER SUPPORTS ON EACH SIDE OF SANITARY SEWER MAY ALSO BE REQUIRED. IF REQUIRED, SUPPORTS SHALL BE SPECIFIED AND DETAILED SEPARATELY ON PLAN AND PROFILE DRAWINGS.

PARKER WATER & SANITATION DISTRICT	
CONCRETE ENCASEMENT TYPE II	
SCALE: NONE	DATE: 2/96
APPROVED: JFN	5/98 4/01 1/06
DISTRICT ENGINEER	

2008 REVISION — SHEET 7



TYPE III
CONCRETE ENCASEMENT FOR SANITARY SEWERS

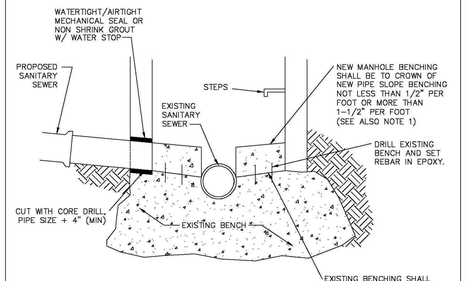
(FULL ENCASEMENT) NO SCALE

GENERAL NOTES FOR TYPE I,II& III ENCASEMENT

1. CONCRETE TO BE CAST AGAINST UNDISTURBED SOIL OR SHORING. IF OPTIONAL CONSTRUCTION JOINT IS USED & BOTTOM HALF OF ENCASEMENT IS POURED SEPARATELY, A ONE INCH LAYER OF SAND OR MORTAR SHALL BE PLACED BETWEEN BOTTOM OF SANITARY SEWER AND TOP OF CONCRETE.
2. LENGTH OF ENCASEMENT FOR:
   (a) TYPE I & TYPE III ENCASEMENT SHALL EXTEND FULL TRENCH WIDTH EXCAVATED FOR PROPOSED SEWER OR CONDUIT.
   (b) TYPE II ENCASEMENT SHALL EXTEND AT LEAST 10 FEET EACH SIDE OF WATER MAIN.
3. UNLESS OTHERWISE NOTED ON PLAN/PROFILE DRAWINGS, TYPE I,II & III ENCASEMENTS NEED NOT BE REINFORCED. REINFORCEMENT, IF REQUIRED, TO BE SPECIFIED AND DETAILED SEPARATELY ON PLAN & PROFILE DRAWINGS.
4. TYPE I, II OR III ENCASEMENTS ARE REQUIRED UNDER FOLLOWING CONDITIONS:
   (a) TYPE I OR TYPE III IF $D_1 \leq 18"$ ($D_1 \leq 12"$) EXCEPT FOR SANITARY SEWER CROSSING OVER OR UNDER WATER MAINS.
   (b) TYPE IIa IS REQUIRED FOR SANITARY SEWERS CROSSING UNDER WATER MAINS AND $D_2 \leq 24"$ ($D_2 \leq 18"$)
   (c) TYPE IIb IS REQUIRED FOR SANITARY SEWERS CROSSING OVER TOP OF WATER MAINS, REGARDLESS OF DIMENSION "D_3".
   (d) EXCEPT FOR UNUSUAL CIRCUMSTANCES, WATER MAIN CROSSINGS, OR WHERE UNSTABLE SOIL CONDITIONS ARE ENCOUNTERED, TYPE I ENCASEMENT WILL NORMALLY BE SATISFACTORY.
   (e) IF THE SANITARY SEWER IS REPLACED OR CONSTRUCTED OF DUCTILE IRON PIPE (AWWA C-150 OR C-151), CONCRETE ENCASEMENT MAY NOT BE REQUIRED.
5. FILLER MATERIAL BETWEEN CONDUITS TO BE:
   (a) APPROVED COMPRESSIBLE MATERIAL SUCH AS STYROFOAM, ETC IF D_3 & $D_4 \leq 6"$
   (b) COMPACTED CLASS "B" BEDDING IF D_3 & $D_4 > 6"$ (IF $D_4 \geq 6"$ FOR TYPE IIb ENCASEMENT POUR CONCRETE ON UNDISTURBED SOIL)
6. SHORING OR SHEETING, IF USED, TO BE CUT OFF AT TOP OF ENCASEMENT.
7. THESE ENCASEMENT DETAILS MAY ALSO BE APPLICABLE FOR CONDUITS OTHER THAN STORM OR SANITARY SEWER INSTALLATIONS.
8. IN CERTAIN SITUATIONS WHERE CONDUIT DIAMETER "D" IS EXTREMELY LARGE, PIER SUPPORTS ON EACH SIDE OF SANITARY SEWER MAY ALSO BE REQUIRED. IF REQUIRED, SUPPORTS SHALL BE SPECIFIED AND DETAILED SEPARATELY ON PLAN AND PROFILE DRAWINGS.
9. CONCRETE ENCASED PIPING SHALL BE LINED WITH FELT LAYER.

PARKER WATER & SANITATION DISTRICT	
CONCRETE ENCASEMENT TYPE III	
SCALE: NONE	DATE: 2/96
APPROVED: PVR	5/98 1/16 10/16
DIRECTOR OF ENGINEERING	

2016 REVISION — SHEET S4.8



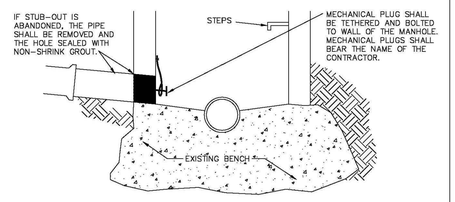
MANHOLE INVERT TIE-IN

NOTES

1 – NEW BENCH SHALL INCLUDE REINFORCEMENT TO CONTROL CONCRETE CRACKING.

PARKER WATER & SANITATION DISTRICT	
MANHOLE INVERT TIE-IN DETAIL	
SCALE: NONE	DATE: 2/96
APPROVED: PVR	1/16 10/16
DIRECTOR OF ENGINEERING	

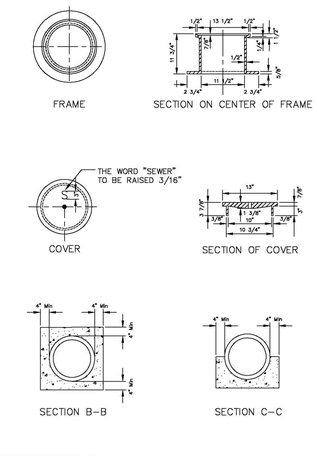
2016 REVISION — SHEET S4.9



MANHOLE STUB-OUT DETAIL

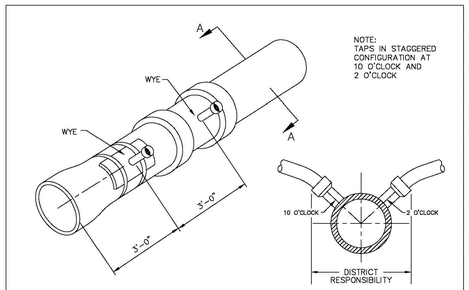
PARKER WATER & SANITATION DISTRICT	
MANHOLE STUB-OUT DETAIL	
SCALE: NONE	DATE: 2/96
APPROVED: PVR	1/16 10/16
DIRECTOR OF ENGINEERING	

2016 REVISION — SHEET S4.10



PARKER WATER & SANITATION DISTRICT	
IN-LINE CLEANOUT SECTIONS	
SCALE: NONE	DATE: 2/96
APPROVED: PVR	2/00 1/06 1/16 10/16
DIRECTOR OF ENGINEERING	

2016 REVISION — SHEET S4.12



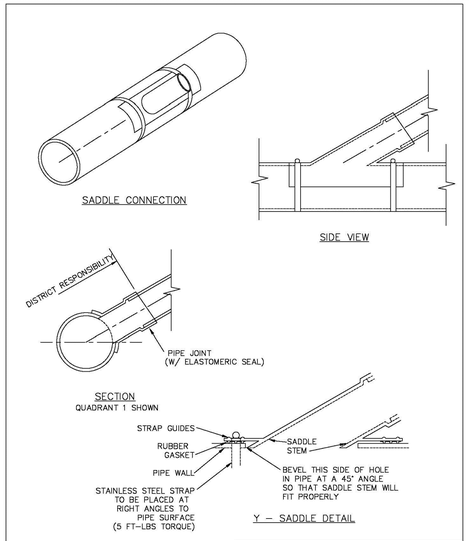
SECTION A – A

Sewer service connections shall be positioned at either the 2 o'clock or the 10 o'clock postion on the circumference of the sewer main. On new installations, tee or wye fittings shall be used.When tapping into existing sewer main, a saddle connection and approved coring method shall be used. The minimum distance between service connections made along the pipe shall be 3 feet. The minimum distance from either the bell or spigot end of a pipe shall be 3 feet. The minimum distance from the center of a manhole to a service connection shall be either 7 feet or the transition point from the manhole trench to the normal pipe trench, whichever is greater. A maximum of 4 sewer service connections shall be allowed per 20 foot length of pipe. In all cases, a specific soils investigation should be conducted to assure that the external loading will be within allowable limits regardless of the number of taps involved.

DOMESTIC SEWER TAPPING DETAIL

PARKER WATER & SANITATION DISTRICT	
DOMESTIC SEWER TAPPING DETAIL	
SCALE: NONE	DATE: 2/96
APPROVED: PVR	4/01 1/08 1/16 10/16
DIRECTOR OF ENGINEERING	

2016 REVISION — SHEET S4.13



Y – SADDLE DETAIL

NOTES:

1. SADDLE FITTINGS TO BE PER ASTM D3034.
2. CONNECTION SHALL BE Y – SADDLE WITH TWO BONDS

PARKER WATER & SANITATION DISTRICT	
P.V.C. SADDLE CONNECTION DETAIL	
SCALE: NONE	DATE: 2/96
APPROVED: PVR	1/16 10/16
DIRECTOR OF ENGINEERING	

2016 REVISION — SHEET S4.14

CALL 811
TWO WORKING DAYS
BEFORE YOU DIG
1-800-922-1987
UNCC UTILITY NOTIFICATION CENTER OF COLORADO

N:\PROJECTS\HESS RANCH\CAD\ENGINEERING\SHEET SETS\CD'S\F12\PARKER WATER AND SANITATION\F12 SANITARY SEWER DETAILS.DWG, BRIANW, 6/17/2021 9:49 AM

No.	Revisions	Date	Init.	Appr.	Date

CIVIL
a Westwood team
10333 E. Dry Creek Rd.
Suite 240
Englewood, CO 80112
tel: 720.482.9526
www.civilsc.com
westwoodps.com

HR 935 LLC
7353 South Alton Way
CENTENNIAL, CO 80112

TRAILS AT CROWFOOT
FILING 12 CONSTRUCTION DRAWINGS
SANITARY SEWER DETAIL

DRAWN BY: JF	SCALE: AS SHOWN		
CHECKED BY: JJJ	FILE NO: 8130283701		
DATE: SEPTEMBER 2017			

SHEET NUMBER 10

INSPECTION POLICY:

1. ALL SERVICE INSPECTIONS MUST BE SCHEDULED AT LEAST 24 HOURS IN ADVANCE OF THE REQUESTED INSPECTION.
2. SERVICE INSPECTIONS WILL OCCUR BETWEEN 1:00 P.M. AND 3:00 P.M. SPECIFIC INSPECTION TIMES ARE NOT AVAILABLE.
3. IF THE CONTRACTOR IS NOT READY FOR INSPECTION WHEN THE INSPECTOR ARRIVES AT THE SITE OR SERVICE FAILS, A RE-INSPECTION WILL HAVE TO BE SCHEDULED IN ACCORDANCE WITH NOTES 1 AND 2 ABOVE AND A RE-INSPECTION FEE CHARGED.
4. SHOULD THE SERVICE LINES BE DAMAGED BY LATER CONSTRUCTION, AN INSPECTION OF THE REPAIR WILL BE REQUIRED IN ACCORDANCE WITH NOTES 1 AND 2 ABOVE.
5. THE CONTRACTOR SHALL LEAVE ALL PIPE AND FITTINGS EXPOSED FOR THE INSPECTOR TO OBSERVE. INSPECTORS WILL NOT ENTER ANY EXCAVATIONS TO CHECK MATERIALS. THE TOP LAYER OF BEDDING CAN BE ADDED AFTER THE INSPECTION HAS BEEN COMPLETED.
6. ALL EXCAVATIONS SHALL BE IN ACCORDANCE WITH OSHA STANDARDS.
7. LOTS WITHOUT BUILDING ADDRESSES BEFORE DISTRICT INSPECTION OR METER SET WILL FAIL AUTOMATICALLY.
8. CONTRACTOR MUST BE PRESENT AT TIME OF INSPECTION. UNLESS COORDINATED WITH DISTRICT INSPECTOR.

INSTALLATION NOTES:

WATER

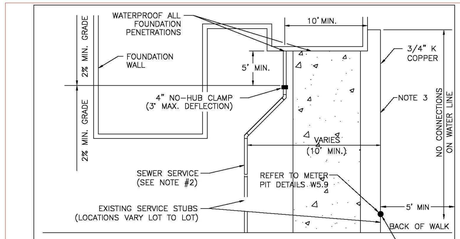
1. ACCEPTABLE PIPE MATERIALS SHALL BE K-COPPER TUBING. (3/4" MIN.)
2. APPROVED BEDDING TO BE SQUEEGEE.
3. ONLY ONE COUPLING WILL BE ALLOWED BETWEEN THE STUB-IN AND BUILDING. COMPRESSION COUPLINGS WILL NOT BE ALLOWED ON NEW CONSTRUCTION. SILVER SOLDERED JOINTS MUST BE USED ON SERVICES LARGER THAN 3/4". SILVER SOLDERED JOINTS MUST BE INSPECTED BY PWSD PRIOR TO BURIAL. FLARED COUPLINGS WILL BE ALLOWED ON ALL SERVICES 3/4" AND SMALLER.
4. A WATER SERVICE WHICH CROSSES A SEWER SERVICE CAN DO SO ONLY AT A 45-90° ANGLE. WATER SERVICES SHALL BE LOCATED A MINIMUM OF 18" ABOVE SEWER SERVICE.
5. WATER SERVICE FOUNDATION PENETRATIONS SHALL BE WATERPROOFED USING MASTIC OR OTHER APPROVED METHOD, CRAWL SPACE REQUIRES CONTINOUS COPPER WITH A 1" BURY.
6. CURB STOP MUST BE PLUMB AND CENTERED OVER THE NUT, IT SHOULD BE STRAPPED TO THE METER PIT (RESIDENTIAL INSTALLATIONS) OR CENTERED OVER THE EASEMENT LINE (COMMERCIAL INSTALLATIONS). THE ASSEMBLY MUST BE AT OR SLIGHTLY ABOVE FINISHED GRADE.
7. MOVED CURB BOXES MUST BE INSPECTED BY PWSD PRIOR TO BURIAL.
8. WATERLINE MUST BE ATTACHED TO A SUPPORT BOARD THAT IS MOUNTED TO THE WALL.
9. NO VOIDS ALLOWED UNDER WATERLINES FROM STOP BOX TO FOUNDATION.
10. CURBSTOP BOXES AND METER PITS CANNOT BE IN DRIVEWAYS.
11. ONLY 3/4" (JUMPER) PIPES (RESIDENCES) ARE ALLOWED. (JUMPER) PIPES WILL BE REMOVED PRIOR TO METER SET DATE.
12. ALL SERVICES WILL BE PERMANENTLY MARKED ON CURB FACE AS FOLLOWS:
    "X" FOR SANITARY SEWER SERVICE
    "V" FOR WATER SERVICES
13. NO SPLICES OR FLARED COUPLINGS ALLOWED ON SERVICES LARGER THAN 3/4". SILVER SOLDERED JOINTS MUST BE USED IN MOVING STOPBOXES ON SERVICES LARGER THAN 3/4". SILVER SOLDERED JOINTS MUST BE INSPECTED BY PWSD PRIOR TO BURIAL. FLARED COUPLINGS WILL BE ALLOWED ON ALL SERVICES 3/4" AND SMALLER.

PARKER WATER & SANITATION DISTRICT

DISTRICT POLICIES & INSTALLATION NOTES FOR WATER SERVICES

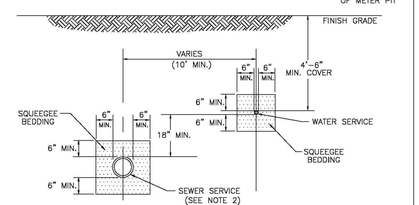
SCALE: NONE	DATE: 2/96
APPROVED: PVR, DIRECTOR OF ENGINEERING	1/04, 1/16, 10/16

2016 REVISION — SHEET W1.1



TYPICAL SERVICES PLAN VIEW

NTS



TYPICAL SERVICES SECTION

NTS

NOTE

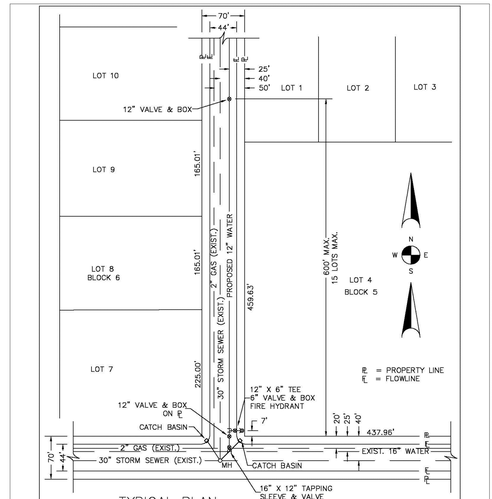
1. SEE SHEET W1.1 FOR DISTRICT POLICIES AND INSTALLATION NOTES.
2. REFER TO SEWER SERVICES DETAIL SHEET S1.2.
3. 4" PVC SLEEVES REQUIRED FOR SERVICE LINES UNDER CONCRETE SURFACE.

PARKER WATER & SANITATION DISTRICT

TYPICAL WATER SERVICES

SCALE: NONE	DATE: 2/96
APPROVED: PVR, DIRECTOR OF ENGINEERING	1/04, 10/16, 08/05, 12/07, 1/16

2016 REVISION — SHEET W1.2



TYPICAL PLAN

NOTES:

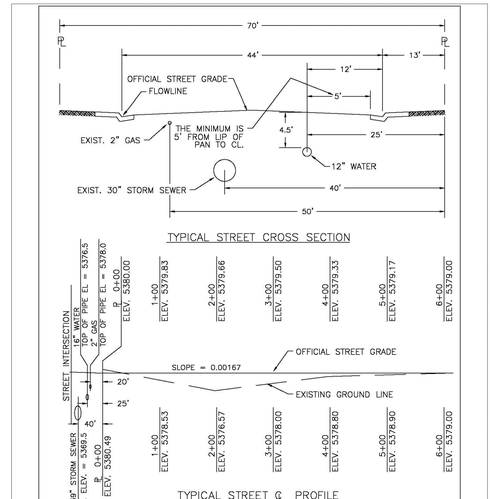
1. SEE "TYPICAL STREET CROSS SECTION – TYPICAL STREET ℄ PROFILE" DRAWING.
2. ALL FIRE HYDRANTS TO BE LOCATED AT POINTS OTHER THAN CORNER INTERSECTIONS SHALL BE INSTALLED AT A LOT LINE EXTENDED.

PARKER WATER & SANITATION DISTRICT

WATER DISTRIBUTION SYSTEM TYPICAL PLAN

SCALE: NONE	DATE: 2/96
APPROVED: PVR, DIRECTOR OF ENGINEERING	1/16, 10/16

2016 REVISION — SHEET W2.1



TYPICAL STREET CROSS SECTION

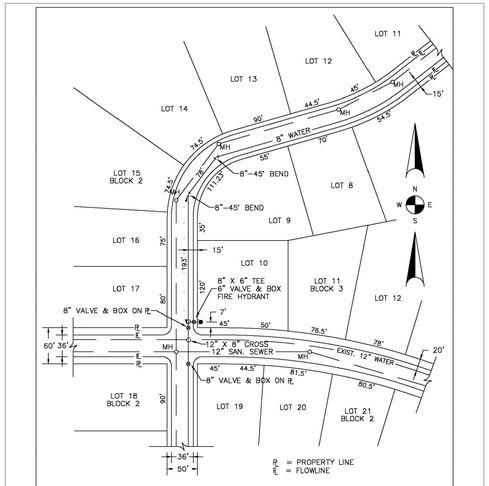
TYPICAL STREET ℄ PROFILE

PARKER WATER & SANITATION DISTRICT

TYPICAL STREET CROSS SECTION TYPICAL STREET ℄ PROFILE

SCALE: NONE	DATE: 2/96
APPROVED: PVR, DIRECTOR OF ENGINEERING	1/16, 10/16

2016 REVISION — SHEET W2.2



TYPICAL PLAN FOR CURVED STREETS

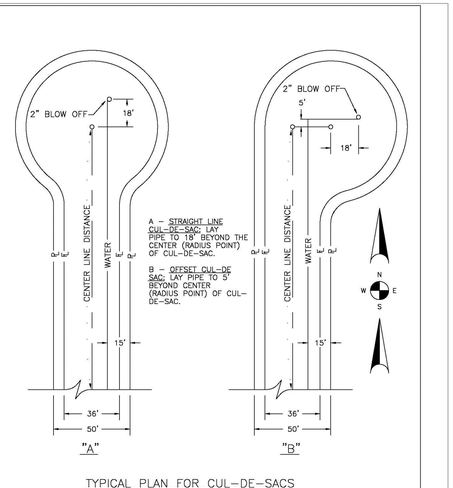
NOTE: WATER AND SEWER MAY NEVER BE CLOSER THAN 10' HORIZONTALLY AND MUST MAINTAIN A MINIMUM OF 5' FROM THE LIP OF PAN ON THE GUTTER.

PARKER WATER & SANITATION DISTRICT

WATER DISTRIBUTION SYSTEM TYPICAL PLAN FOR CURVED STREETS

SCALE: NONE	DATE: 2/96
APPROVED: PVR, DIRECTOR OF ENGINEERING	1/16, 10/16

2016 REVISION — SHEET W2.3



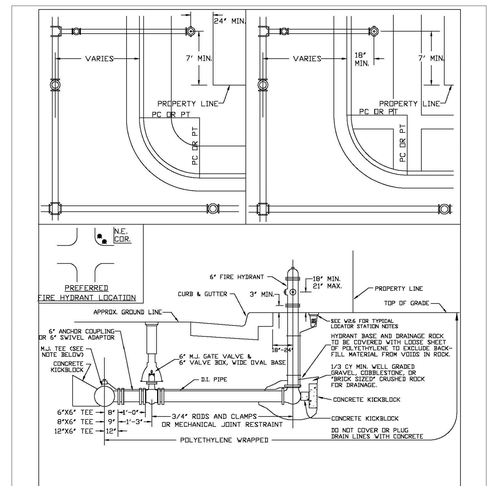
TYPICAL PLAN FOR CUL-DE-SACS

PARKER WATER & SANITATION DISTRICT

WATER DISTRIBUTION SYSTEM TYPICAL PLAN FOR CUL-DE-SACS

SCALE: NONE	DATE: 2/96
APPROVED: PVR, DIRECTOR OF ENGINEERING	1/16, 10/16

2016 REVISION — SHEET W2.4



NOTES:

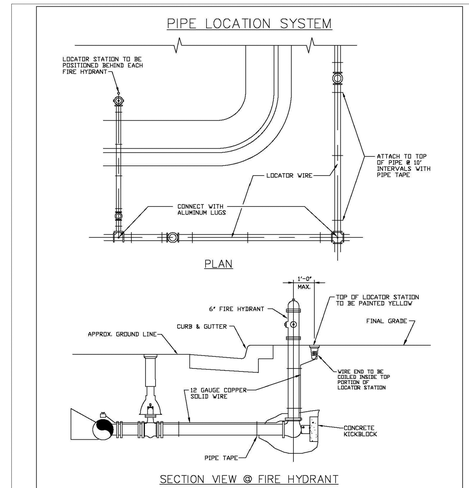
1. ALTERNATE TO THE ABOVE: FASTEN M.J. VALVE DIRECTLY TO A M.J. ANCHOR TEE (ALSO CALLED SWIVEL TEE.)
2. NO HORIZONTAL OR VERTICAL BENDS ARE ALLOWED IN FIRE HYDRANT BRANCH
4. NO PORTION OF FIRE HYDRANT MAY [illegible] VALVE AREA.
5. FIRE HYDRANT EXTENSIONS MAY NOT BE MORE THAN 6" [illegible]

PARKER WATER & SANITATION DISTRICT

FIRE HYDRANTS LOCATION & INSTALLATION

SCALE: NONE	DATE: 2/96
APPROVED: PVR, DIRECTOR OF ENGINEERING	4/01, 10/16, 01/02, 12/07, 1/16

2016 REVISION — SHEET W2.5



NOTES:

1. FOR USE ON ALL DUCTILE IRON AND PVC WATER MAINS.
2. LOCATOR STATION POSITION MAY BE MODIFIED AT THE DIRECTION OF THE DISTRICT ENGINEER.
3. A CONTINUITY TEST WILL BE REQUIRED PRIOR TO PROBATIONARY ACCEPTANCE.

PARKER WATER & SANITATION DISTRICT

LOCATOR WIRE DETAILS

SCALE: NONE	DATE: 2/96
APPROVED: PVR, DIRECTOR OF ENGINEERING	4/01, 01/02, 01/16, 10/16

2016 REVISION — SHEET W2.6

CALL 811
TWO WORKING DAYS
BEFORE YOU DIG
1-800-922-1987
UNCC UTILITY NOTIFICATION CENTER OF COLORADO

N:\PROJECTS\HESS RANCH\CAD\ENGINEERING\SHEET SETS\CD'S\F12\PARKER WATER AND SANITATION\F12 WATER DETAILS.DWG, CODYA, 6/17/2021 9:50 AM

No.	Revisions	Date	Init.	Appr.	Date

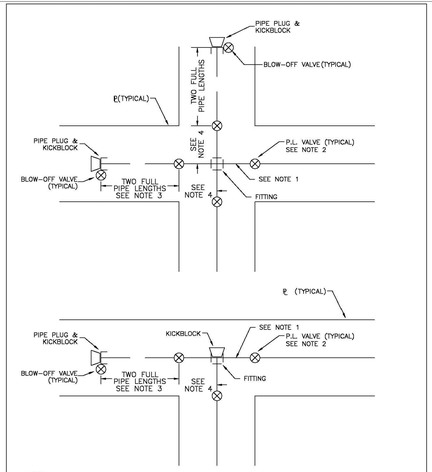
CIVIL
10333 E. Dry Creek Rd.
Suite 240
Englewood, CO 80112
Tel: 720.482.9526
www.civilcad.net
a Westwood team

HR 935 LLC
7353 South Alton Way
CENTENNIAL, CO 80112

TRAILS AT CROWFOOT
FILING 12 CONSTRUCTION DRAWINGS
WATER DETAILS

DRAWN BY: JF	SCALE: AS SHOWN
CHECKED BY: JJJ	FILE NO: 8130283701
DATE: SEPTEMBER 2017	

SHEET NUMBER 11



NOTES:

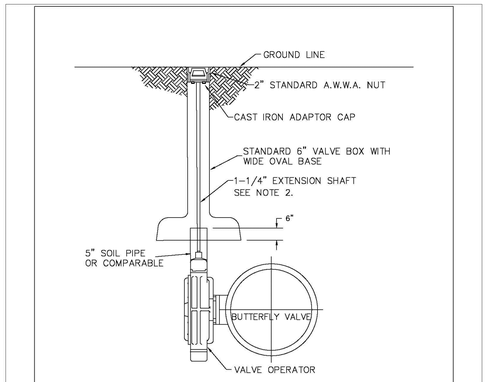
1. LAY PIPE FROM FITTING TO PL
2. INSTALL VALVE AT PL
3. STUB OUT TWO FULL PIPE LENGTHS FROM VALVE AND BLOW-OFF VALVE. PLUG END OF PIPE AND INSTALL KICKBLOCK.
4. ALTERNATIVE TO NOTE 3: ROD OR MECHANICAL JOINT RESTRAINT FROM VALVE TO FITTING AND ELIMINATE THE TWO FULL LENGTHS OF PIPE OUT OF VALVE AND TEMPORARY BLOW-OFF.

PARKER WATER & SANITATION DISTRICT

PIPING AT STREET INTERSECTIONS FUTURE CONNECTIONS

SCALE: NONE	DATE: 2/96
APPROVED: PVR DIRECTOR OF ENGINEERING	01/02 01/16 10/16

2016 REVISION — SHEET W2.7



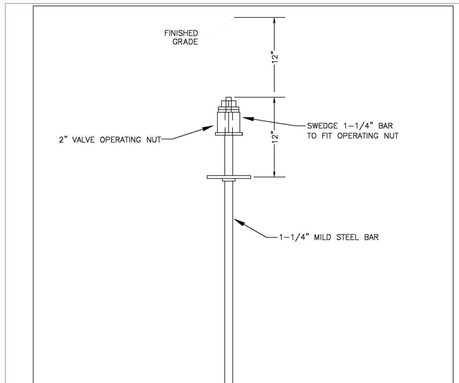
1. THE VALVE BOX SHALL NOT BE PLACED DIRECTLY ON SOIL PIPE.
2. VALVE EXTENSIONS ONLY ALLOWED FOR VALVES DEEPER THAN 9 FT, SEE DETAIL W3.2.

PARKER WATER & SANITATION DISTRICT

TRANSMISSION MAIN BUTTERFLY VALVE INSTALLATION

SCALE: NONE	DATE: 2/96
APPROVED: PVR DIRECTOR OF ENGINEERING	1/16 10/16

2016 REVISION — SHEET W3.1



NOTES:

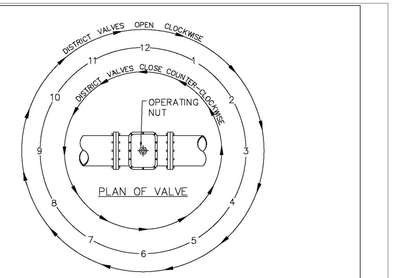
1. VALVE EXTENSIONS ONLY ALLOWED ON VALVES DEEPER THAN 9 FEET.

PARKER WATER & SANITATION DISTRICT

VALVE OPERATOR EXTENSION

SCALE: NONE	DATE: 5/98
APPROVED: PVR DIRECTOR OF ENGINEERING	2/00 12/07 1/16 10/16

2016 REVISION — SHEET W3.3



NOTE:
ONLY RIGHT HAND OPENING VALVES ALLOWED.

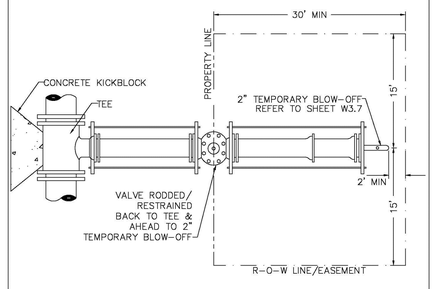
VALVE OPENING & CLOSING PROCEDURE

PARKER WATER & SANITATION DISTRICT

VALVE OPERATION

SCALE: NONE	DATE: 2/96
APPROVED: PVR DIRECTOR OF ENGINEERING	1/16 10/16

2016 REVISION — SHEET W3.4

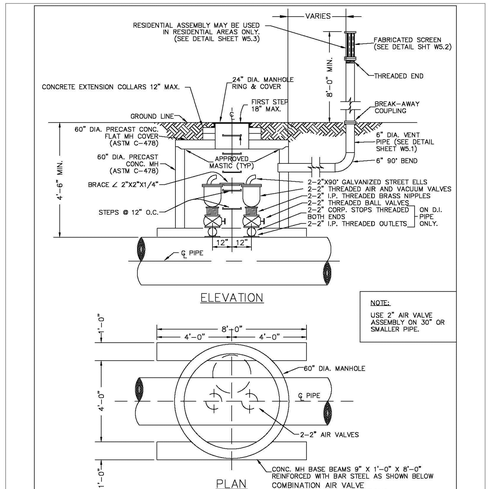


PARKER WATER & SANITATION DISTRICT

STUB-OUT CONFIGURATIONS

SCALE: NONE	DATE: 2/96
APPROVED: PVR DIRECTOR OF ENGINEERING	1/16 10/16

2016 REVISION — SHEET W3.5



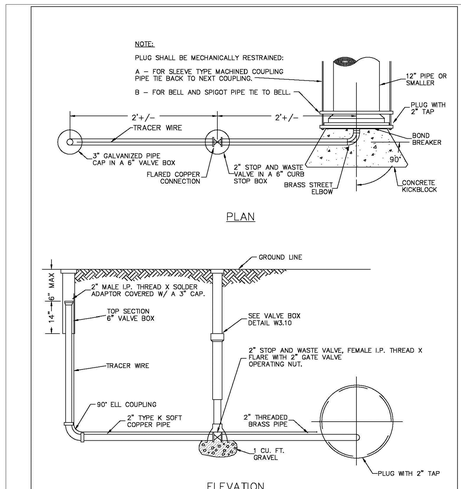
NOTE:
USE 2" AIR VALVE ASSEMBLY ON 30" OR SMALLER PIPE.

PARKER WATER & SANITATION DISTRICT

AIR AND VACUUM VALVE INSTALLATION

SCALE: NONE	DATE: 2/96
APPROVED: PVR DIRECTOR OF ENGINEERING	4/01 1/16 10/16

2016 REVISION — SHEET W3.6

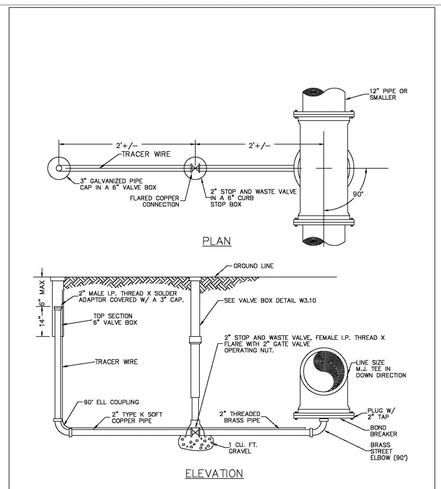


PARKER WATER & SANITATION DISTRICT

BLOW-OFF INSTALLATION FOR 12" & SMALLER PIPE

SCALE: NONE	DATE: 2/96
APPROVED: PVR DIRECTOR OF ENGINEERING	4/01 1/16 10/16

2016 REVISION — SHEET W3.7



NOTE: PLUG SHALL BE MECHANICALLY RESTRAINED.

PARKER WATER & SANITATION DISTRICT

LOW POINT BLOW-OFF WITH SAND TRAP

SCALE: NONE	DATE: 2/96
APPROVED: PVR DIRECTOR OF ENGINEERING	4/01 1/16 10/16

2016 REVISION — SHEET W3.8

CALL 811
TWO WORKING DAYS
BEFORE YOU DIG
UNCC UTILITY NOTIFICATION CENTER OF COLORADO 1-800-922-1987

N:\PROJECTS\HESS RANCH\CAD\ENGINEERING\SHEET SETS\CD'S\F12\PARKER WATER AND SANITATION\F12 WATER DETAILS.DWG, CODYA, 6/17/2021 9:50 AM

No.	Revisions	Date	Init.	Appr.	Date

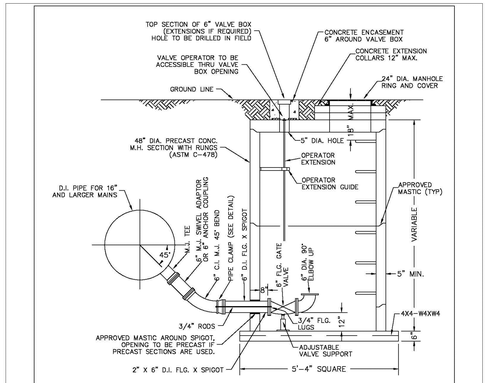
CIVIL a Westwood team
10333 E. Dry Creek Rd. Suite 240 Englewood, CO 80112 Tel: 720.482.9526 www.civil-co.net westwoodps.com

HR 935 LLC
7353 South Alton Way
CENTENNIAL, CO 80112

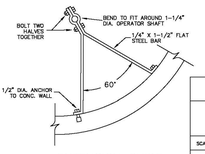
TRAILS AT CROWFOOT
FILING 12 CONSTRUCTION DRAWINGS
WATER DETAILS

DRAWN BY: JF	SCALE: AS SHOWN
CHECKED BY: JJJ	FILE NO: 8130283701
DATE: SEPTEMBER 2017	

SHEET NUMBER 12



ELEVATION

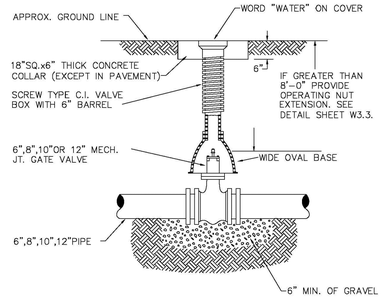


NOTE: THIS BLOW-OFF INSTALLATION MAY BE REPLACED BY A FIRE HYDRANT WHERE APPROVED BY THE DISTRICT FOR 16" AND 20" MAINS.

EXTENSION GUIDE

PARKER WATER & SANITATION DISTRICT	
TRANSMISSION MAIN BLOW-OFF INSTALLATION	
SCALE: NONE	DATE: 2/96
APPROVED: PVR DIRECTOR OF ENGINEERING	4/01 01/02 01/16 10/16

2016 REVISION — SHEET W3.9



6-INCH VALVE BOXES

CHECK MATERIAL SPECIFICATIONS

NOTES:
1. ALL C.I. SHALL BE WRAPPED WITH 8 MIL. MIN. THICKNESS POLYETHYLENE.
2. VALVE NUT SHALL BE CENTERED.
3. VALVE BOX SHALL BE PLUMB.
4. SEE MATERIAL SPECIFICATIONS FOR VALVE BOX WITH GREATER THAN BURIED DEPTH OF 4.5 FT.

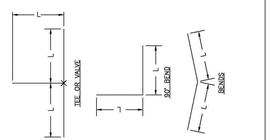
PARKER WATER & SANITATION DISTRICT	
VALVE BOX DETAIL	
SCALE: NONE	DATE: 2/96
APPROVED: PVR DIRECTOR OF ENGINEERING	5/98 10/16 8/99 12/07 1/16

2016 REVISION — SHEET W3.10

LENGTH OF TIED PIPE

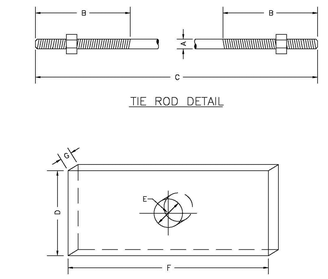
PIPE SIZE		4"			6"			8"			12"			16"			20"			24"		
		D	L	G	D	L	G	D	L	G	D	L	G	D	L	G	D	L	G	D	L	G
TIE OR VALVE		3/4"	6'-0"	M.S.	3/4"	13.0'	M.S.	3/4"	20.0'	M.S.	3/4"	40.0'	M.S.	3/4"	60.0'	M.S.	3/4"	80.0'	M.S.	1"	155.0'	–
BEND	90° BEND	3/4"	6'-0"	M.S.	3/4"	13.0'	M.S.	3/4"	20.0'	M.S.	3/4"	40.0'	M.S.	3/4"	60.0'	M.S.	1"	80.0'	M.S.	1"	155.0'	–
	45° BEND	3/4"	2.0'	M.S.	3/4"	4.0'	M.S.	3/4"	6.0'	M.S.	3/4"	11.0'	M.S.	1"	18.0'	M.S.	3/4"	24.0'	M.S.	1"	45.0'	–
	22-1/2° BEND	3/4"	1.0'	M.S.	3/4"	1.0'	M.S.	3/4"	2.0'	M.S.	3/4"	3.0'	M.S.	3/4"	5.0'	M.S.	3/4"	6.0'	M.S.	–	12.0'	–
	11-1/4° BEND	3/4"	0.0'	M.S.	3/4"	0.0'	M.S.	3/4"	1.0'	M.S.	3/4"	1.0'	M.S.	3/4"	1.0'	M.S.	3/4"	2.0'	M.S.	–	3.0'	–

NOTES:
1. LENGTH OF TIED PIPE MEASURED EACH WAY FROM VALVES AND BENDS.
2. CLAMPS AND RODS NOT ALLOWED FOR 24" AND LARGER PIPES.
3. D = DIAMETER, L = LENGTH, G = GRADE, M.S. = MILD STEEL.
4. MINIMUM 4.5' GROUND COVER REQUIRED.
5. BASED ON 150 PSI INTERNAL PRESSURE.
6. M.S. MEANS MILD STEEL ROD A.S.T.M. STANDARD DESIGNATION A-36. (NUTS SHALL BE A.S.T.M. STANDARD DESIGNATION A-307 GRADE A OR B HEXAGON HEAVY SERIES).
7. A.S. MEANS HIGH STRENGTH ROD A.S.T.M. STANDARD DESIGNATION A-193 GRADE B-7.
8. NUTS SHALL BE A.S.T.M. STANDARD DESIGNATION A-307 GRADE A OR B HEXAGON HEAVY SERIES.
9. SEE TIE ROD DETAIL DRAWING. ALSO, TIE ROD COUPLING DETAILS, CLAMP DETAILS AND SET CLAMP DETAILS.
10. THE NUMBER OF RODS AND CLAMPS WHICH MUST BE USED TOGETHER AND IS NOT NECESSARILY THE LENGTH OF THE RODS.
11. STAR BOLTS NOT ALLOWED ON PIPE LARGER THAN 16".
12. MINIMUM OF 4 RODS REQUIRED ON 16" PIPE IF STAR BOLTS ARE USED.
13. TEES ARE TO BE RODDED ON BRANCH ONLY.



PARKER WATER & SANITATION DISTRICT	
LENGTH OF TIED PIPE	
SCALE: NONE	DATE: 2/96
APPROVED: PVR DIRECTOR OF ENGINEERING	4/01 1/16 10/16

2016 REVISION — SHEET W3.11



TIE RODS

A ROD DIAMETER	B THREAD LENGTH	C ROD LENGTH
3/4"	6"	1' TO 11' & 20'
1"	6"	1' TO 11' & 20'
1-1/4"	ALL THREAD	1' TO 11' & 20'

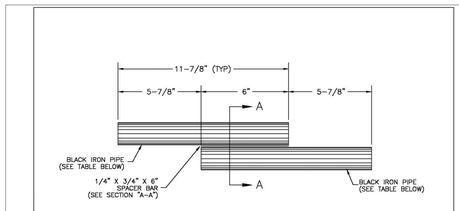
WASHERS

D WIDTH	E HOLE DIAMETER	F LENGTH	G THICKNESS
3"	7/8"	6"	3/8"
3"	1-1/8"	7"	1/2"
4"	1-3/8"	7"	5/8"

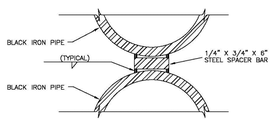
NOTES:
1. SEE TIED JOINTS ROD DIMENSIONS SHEET.
2. SEE CLAMP DETAILS AND DIMENSIONS (SHEET W3.15) FOR PROPER PLACEMENT OF WASHERS.

PARKER WATER & SANITATION DISTRICT	
TIE ROD AND WASHER DETAILS	
SCALE: NONE	DATE: 2/96
APPROVED: PVR DIRECTOR OF ENGINEERING	1/16 10/16

2016 REVISION — SHEET W3.12



TIE ROD COUPLING DETAIL



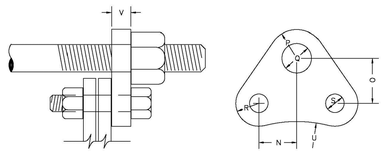
SECTION "A-A"

NOTE:
BLACK IRON PIPE = SCHEDULE 40.

ROD SIZE	PIPE DIAMETER
3/4"	1"
1"	1-1/4"
1-1/4"	1-1/2"

PARKER WATER & SANITATION DISTRICT	
TIE ROD COUPLING	
SCALE: NONE	DATE: 2/96
APPROVED: PVR DIRECTOR OF ENGINEERING	1/16 10/16

2016 REVISION — SHEET W3.13



FLANGE LUG DETAIL

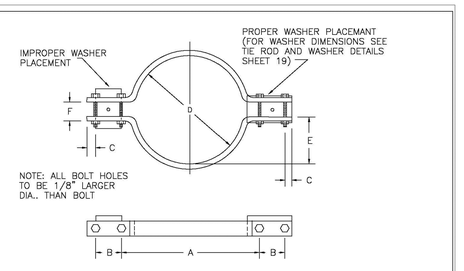
DIMENSIONS (IN INCHES)

PIPE DIA.	N	O	H.S. ROD P	H.S. ROD Q	H.S. ROD ROD DIA.	M.S. ROD P	M.S. ROD Q	M.S. ROD ROD DIA.	R	S	U	V	PIPE DIA.
4	1-7/16	2	1	7/8	3/4	1	7/8	3/4	7/8	3/4	2-7/8	3/4	4
6	1-31/32	2-3/4	1	7/8	3/4	1	7/8	3/4	7/8	3/4	4-1/8	3/4	6
8	2-7/16	3-3/4	1	7/8	3/4	1	7/8	3/4	7/8	3/4	5-3/8	3/4	8
12	3-7/16	5-3/4	1-1/8	7/8	3/4	1-1/4	1-1/8	7/8	1	7/8	7-7/8	7/8	12
16	4-7/16	7-3/4	1-1/8	7/8	3/4	1-1/2	1-3/8	1-1/4	1-1/4	1-1/8	9-3/8	1-1/8	16
20	5-31/32	9-3/4	1-1/8	1-1/8	7/8	–	–	–	1-7/16	1-1/4	11-7/16	1-1/4	20
24	RODS AND CLAMPS NOT ALLOWED												24

NOTES:
1. M.S. MEANS MILD STEEL ROD A.S.T.M. STANDARD DESIGNATION A-36. (NUTS SHALL BE A.S.T.M. STANDARD DESIGNATION A-307 GRADE A OR B HEXAGON HEAVY SERIES).
2. H.S. MEANS HIGH STRENGTH STEEL ROD A.S.T.M. STANDARD DESIGNATION A-193 GRADE B7. (NUTS SHALL BE A.S.T.M. STANDARD DESIGNATION A-194 GRADE 2H).
3. FLANGE LUGS SHALL NOT BE USED ON VALVES.

PARKER WATER & SANITATION DISTRICT	
FLANGE LUG DETAIL	
SCALE: NONE	DATE: 2/96
APPROVED: PVR DIRECTOR OF ENGINEERING	1/16 10/16

2016 REVISION — SHEET W3.14



CLAMP DETAILS

DIMENSIONS

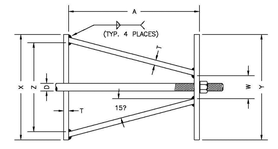
TABLE OF DIMENSIONS FOR CLAMPS

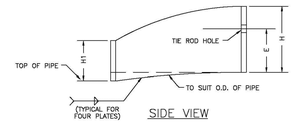
PIPE DIA.	BAR SIZE	A BELL CLAMP	A BODY CLAMP	B BELL CLAMP	B BODY CLAMP	C BELL CLAMP	C BODY CLAMP	D BELL CLAMP	D BODY CLAMP	E BELL CLAMP	E BODY CLAMP	F BELL CLAMP	F BODY CLAMP	BOLT SIZES BELL CLAMP	BOLT SIZES BODY CLAMP	PIPE DIA.
4	1-1/2X1/2	9-3/4	7-1/2	3-1/2	3-1/2	1	1	6-3/4	4-7/8	2-3/4	1-13/16	1-1/4	1-1/4	3X1/2	2-1/2X3/8	4
6	2X1/2	13	9-1/2	4	4-1/2	2	2	10-1/4	7-1/8	4-1/8	2-15/16	2	1-1/4	3-1/2X1/2	3-1/2X1/2	6
8	2-1/2X1/2	15	12-3/4	4-3/4	4-1/2	1-1/4	1-1/2	12-1/4	9-1/4	5-1/8	4	2	1-1/4	4-1/2X1/2	4X1/2	8
12	2-1/2X5/8	17-1/2	16-5/8	4-5/8	4-3/4	1	1-1/4	14-1/2	13-1/2	6	5-1/2	2-1/2	2-1/2	4-1/2X5/8	4-1/2X5/8	12
16	3X3/4	24-1/2	21-7/8	4-1/2	4-3/4	1-1/2	1-1/2	18-3/4	17-1/2	8-3/8	7-1/2	3	2-1/2	5-1/2X5/8	5-1/2X5/8	16
20	3X3/4	30-1/2	25-5/8	4-1/2	4-3/4	1-1/2	1-1/2	24-3/4	21-3/4	10-7/8	9-1/2	3	2-3/4	5-1/2X5/8	5-1/2X5/8	20
24	RODS AND CLAMPS NOT ALLOWED															24

NOTE: ALL DIMENSIONS IN INCHES
CLAMPS MAY NOT BE USED ON PVC PIPE.

PARKER WATER & SANITATION DISTRICT	
CLAMP DETAILS AND DIMENSIONS	
SCALE: NONE	DATE: 2/96
APPROVED: PVR DIRECTOR OF ENGINEERING	12/07 1/16 10/16

2016 REVISION — SHEET W3.15





HARNESS LUG DIMENSIONS

CARRIER PIPE NOMINAL DIA.	STUD DIA. O	A	W	Z	T	H	E	H1	Y	X
4" TO 16"	3/4"	5"	1-1/2"	3-3/4"	3/8"	4-1/8"	3-1/8"	2"	4-1/2"	5"
20"	1"	5-3/4"	1-3/4"	4-7/16"	3/8"	4-1/2"	3-1/4"	2"	5-1/4"	5-11/16"

NOTES:
1. USE TWO HIGH STRENGTH STEEL TIE RODS AT END OF CASING.
2. TIE ROD HOLE DIAMETER 1/8" LARGER THAN STUD DIAMETER.
3. BOTTOM EDGE OF ALL PLATES SHAPED TO FIT O.D. OF PIPE.

PARKER WATER & SANITATION DISTRICT	
HARNESS LUG DETAILS	
SCALE: NONE	DATE: 2/96
APPROVED: PVR DIRECTOR OF ENGINEERING	1/16 10/16

2016 REVISION — SHEET W3.16

CALL 811
TWO WORKING DAYS
BEFORE YOU DIG
1-800-922-1987
UNCC UTILITY NOTIFICATION CENTER OF COLORADO

N:\PROJECTS\HESS RANCH\CAD\ENGINEERING\SHEET SETS\CD'S\F12\PARKER WATER AND SANITATION\F12 WATER DETAILS.DWG, CODYA, 6/17/2021 9:50 AM

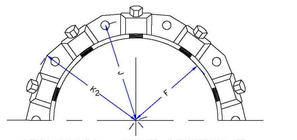
No.	Revisions	Date	Init.	Date	Appr.	Date

CIVIL a Westwood team
10333 E. Dry Creek Rd. Suite 240 Englewood, CO 80112 Tel:720.482.9526 www.civilpts.com westwoodps.com

HR 935 LLC
7353 South Alton Way
CENTENNIAL, CO 80112

TRAILS AT CROWFOOT
FILING 12 CONSTRUCTION DRAWINGS
WATER DETAILS

SHEET NUMBER 13
DRAWN BY: JF
CHECKED BY: JJJ
DATE: SEPTEMBER 2017
SCALE: AS SHOWN
FILE NO: 8130283701



MECHANICAL JOINT RESTRAINT



WEDGE DETAIL



BOLT HOLE DETAIL

	NOMINAL PIPE SIZE	NO. OF BOLTS	NO. OF WEDGES	K2 INCHES	J INCHES	F INCHES	M INCHES	
P	4"	2	2					P
	6"	6	3	11.12	9.5	7.00	0.88	
V	8"	6	4	13.37	11.75	9.15	1.00	V
C	10"	8	6	15.62	14.00	11.20	1.00	C
	12"	8	8	17.88	16.25	13.30	1.25	
	4"	4	2					
D	6"	6	3	11.12	9.5	7.00	0.88	D
	8"	6	4	13.37	11.75	9.15	1.00	
I	10"	8	6	15.62	14.00	11.20	1.00	I
	12"	8	8	17.88	16.25	13.30	1.25	

NOTES:

1. DIMENSIONS FOR 16" AND 20" D.I. PIPE NOT SHOWN.

PARKER WATER & SANITATION DISTRICT

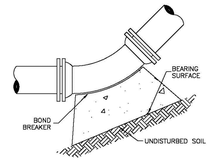
MECHANICAL JOINT RESTRAINT DETAILS

SCALE: NONE | DATE: 2/96

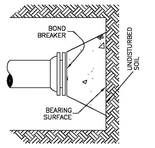
APPROVED: PVR, DIRECTOR OF ENGINEERING | 2/00, 12/07, 1/16, 10/16

2016 REVISION

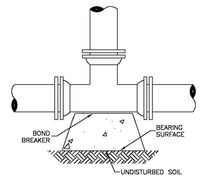
SHEET W3.17



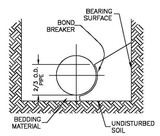
11-1/4°, 22-1/2°, 45° & 90° BENDS



DEAD END



TEE



TYPICAL CROSS SECTION

NOTES:

1. ALL VALVES, TEES, BENDS AND PLUGS SHALL BE RESTRAINED AND KICKBLOCKED.
2. BEARING SURFACES SHOWN IN CHART ARE MINIMUM.
3. BASED ON 150 PSI PIPE PRESSURE PLUS WATER HAMMER:
   4", 6" AND 8" WATER HAMMER = 120 PSI.
   12" WATER HAMMER = 110 PSI
   16", 20" AND 24" WATER HAMMER = 70 PSI.
4. SOIL BEARING CAPACITY = 3,000 LBS./SQ. FT.

MINIMUM BEARING SURFACE AREA (IN SQUARE FEET)

SIZE OF PIPE	BENDS				TEE OR DEAD END
	11-1/4°	22-1/2°	45°	90°	
4"	1.00	1.00	1.00	1.80	1.00
6"	1.00	1.75	2.25	4.00	3.00
8"	1.00	2.00	4.00	7.50	5.25
12"	2.00	4.25	8.25	15.25	11.00
16"	3.00	6.50	12.50	23.00	16.50
20"	5.00	10.00	19.50	35.50	25.00
24"	6.00	13.00	26.00	47.00	33.00

PARKER WATER & SANITATION DISTRICT

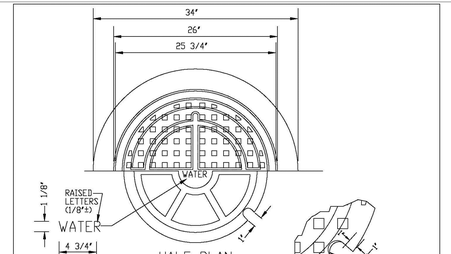
CONCRETE KICKBLOCKS
BEARING SURFACES AND INSTALLATION

SCALE: NONE | DATE: 2/96

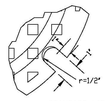
APPROVED: PVR, DIRECTOR OF ENGINEERING | 4/01, 1/16, 10/16

2016 REVISION

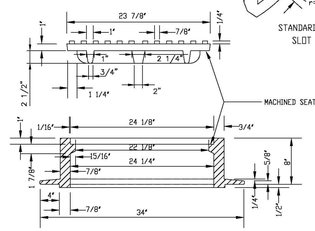
SHEET W3.18



HALF PLAN



STANDARD LIFTING SLOT DETAIL



NOTE:

1. Casting Specifications: ASTM A-48 With A Minimum Tensile Strength Of 25 KSI (Class 25)
2. All Casting To Be Dipped In Asphalt Base Paint (Or Approved Equal).

PARKER WATER & SANITATION DISTRICT

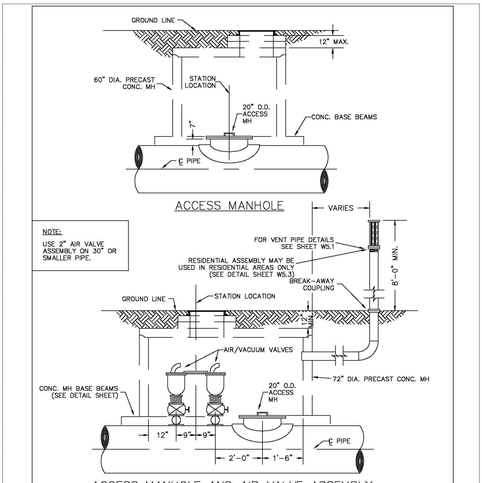
24" DIAMETER RING AND COVER

SCALE: NONE | DATE: 6/03

APPROVED: PVR, DIRECTOR OF ENGINEERING | 12/07, 1/16, 10/16

2016 REVISION

SHEET W3.19



ACCESS MANHOLE

NOTE:
USE 2" AIR VALVE ASSEMBLY ON 30" OR SMALLER PIPE.

ACCESS MANHOLE AND AIR VALVE ASSEMBLY

NOTE:
SEE SHEET W3.6 FOR CONCRETE MANHOLE BASE BEAMS AND AIR/VACUUM VALVE DETAILS.

PARKER WATER & SANITATION DISTRICT

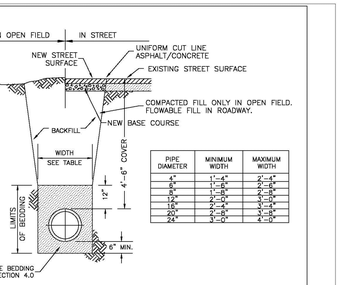
ACCESS MANHOLE ASSEMBLY

SCALE: NONE | DATE: 2/96

APPROVED: PVR, DIRECTOR OF ENGINEERING | 4/01, 1/16, 10/16

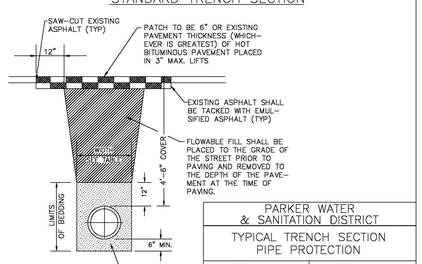
2016 REVISION

SHEET W3.20



PIPE DIAMETER	MINIMUM WIDTH	MAXIMUM WIDTH
4"	1'-6"	2'-4"
6"	1'-6"	2'-4"
8"	1'-6"	2'-4"
12"	2'-0"	3'-0"
16"	2'-0"	3'-4"
20"	2'-0"	3'-8"
24"	2'-0"	4'-0"

STANDARD TRENCH SECTION



STREET CUT PATCH

PARKER WATER & SANITATION DISTRICT

TYPICAL TRENCH SECTION
PIPE PROTECTION

SCALE: NONE | DATE: 2/96

APPROVED: PVR, DIRECTOR OF ENGINEERING | 1/16, 10/16

2016 REVISION

SHEET W4.1

PIPE BEDDING:

(a) Installation of Bedding and Pipe: After completion of the trench excavation and proper preparation of the foundation, six inches (6") of bedding material shall be placed on the trench bottom for support under the pipe. Bell holes shall be dug deep enough to provide a minimum of two inches (2") of clearance between the bell and bedding material. All pipe shall be installed in such a manner as to insure full support of the pipe barrel over its entire length. After the pipe is adjusted for line and grade, and the joint is made, the bedding material shall be carefully placed and tamped under the haunches of the pipe and in the previously dug bell holes.

Tamping is herein defined as the act of placing approved bedding material under the haunches of the pipe, paying particular attention to voids, bell holes, and sling holes. The purpose of tamping is to ensure uniform support for the pipe.

The limits of bedding shall be from six inches (6") below the bottom of the pipe to twelve inches (12") above the top of the pipe. Approved backfill may then be installed to the groundline. See Chapter 2 of these Standards for backfill and compaction of backfill.

Compaction of bedding is not required. The only requirement is sufficient tamping to achieve uniform support under the pipe. See Sheet W4.1 of the Standard Details for a typical trench cross section.

(b) Bedding Material: The bedding material shall be a clean well-graded sand or squeegee sand and shall conform to the following limits when tested by means of laboratory sieves:

Well-Graded Sand for (24-inch or large diameter)

Sieve Size	Total Percent Passing by Weight
3/8 Inch	100
No. 4	70-100
No. 8	36-93
No. 16	20-80
No. 30	8-65
No. 50	2-30
No. 100	1-10
No. 200	0-3

Squeegee Sand
for use with 20-inch or smaller

Sieve Size	Total Percent Passing by Weight
3/8 Inch	100
No. 200	0-3

If approved by the District, fines form the trench walls and spoils pile may be used to provide uniform support for the pipe. No rock or stone larger than that allowed by the sieve analysis, or any other detrimental substance, shall be placed closer to the pipe than six inches (6"). Approved bedding materials shall be stockpiled on the jobsite to be used in the event natural materials become unsatisfactory. The District reserves the right to require the use of the specified bedding material at any time.

PARKER WATER & SANITATION DISTRICT

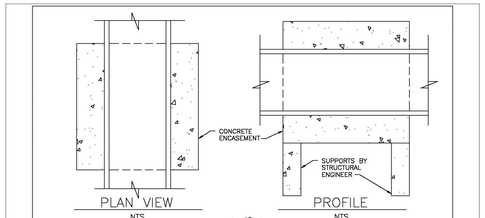
PIPE BEDDING

SCALE: NONE | DATE: 2/96

APPROVED: PVR, DIRECTOR OF ENGINEERING | 5/98, 2/00, 1/16, 10/16

2016 REVISION

SHEET W4.2



TYPICAL SECTION
NTS

NOTES:
1. ALL CONCRETE SHALL HAVE A 28 DAY STRENGTH OF 3,000 PSI USING TYPE I PORTLAND CEMENT AND 3/4" AGGREGATE. ALL CONCRETE SHALL HAVE 5-7% ENTRAINED AIR CONTENT AND A MAXIMUM SLUMP OF 4".
2. ALL REINFORCEMENT SHALL CONFORM TO ASTM A615,GRADE 60.
3. ALL REINFORCEMENT SHALL HAVE 2" MIN. CONCRETE COVER.
4. THE SUBGRADE SHALL BE COMPACTED TO 95% OF THE MAXIMUM STANDARD PROCTOR DENSITY PRIOR TO FORMING THE STRUCTURE.
5. PIPE SHALL BE WRAPPED WITH FELT LAYER BEFORE ENCASING.

PARKER WATER & SANITATION DISTRICT

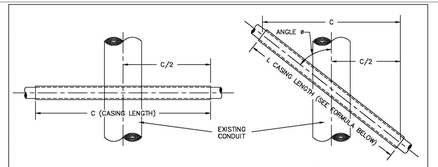
WATERLINE ENCASEMENT

SCALE: NONE | DATE: 5/98

APPROVED: PVR, DIRECTOR OF ENGINEERING | 1/16, 10/16

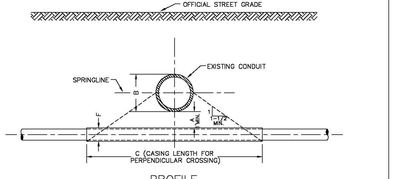
2016 REVISION

SHEET W4.3



PLAN
FOR PERPENDICULAR CROSSING

PLAN
FOR ANGLE CROSSING



PROFILE

FORMULA FOR FINDING C:

$$C = B + (2)(1.5)\left[\frac{B}{2} + A + F\right]$$

- B: PERPENDICULAR CROSSING CASING LENGTH
- A: O.D. WATER DEPARTMENT CONDUIT
- 1.5: CONSTANT
- F: RATIO OF MIN. SLOPE
- 1/2 B: 1/2 O.D. WATER DEPARTMENT CONDUIT
- 1/2 D: VERTICAL DISTANCE BETWEEN CASING AND WATER DEPARTMENT CONDUIT
- D: CASING O.D.

FORMULA FOR FINDING L:

$$L = \frac{C}{\text{Sin } \phi}$$

NOTES:

1. FINAL APPROVAL OF BORING AND CASING METHOD AND MATERIALS SHALL BE OBTAINED FROM THE ENGINEER PRIOR TO CONSTRUCTION.

PARKER WATER & SANITATION DISTRICT

BORED CROSSINGS BENEATH CONDUITS

SCALE: NONE | DATE: 2/96

APPROVED: PVR, DIRECTOR OF ENGINEERING | 2/00, 1/16, 10/16

2016 REVISION

SHEET W4.4

CALL 811
TWO WORKING DAYS
BEFORE YOU DIG
1-800-922-1987
UNCC UTILITY NOTIFICATION CENTER OF COLORADO

N:\PROJECTS\HESS RANCH\CAD\ENGINEERING\SHEET SETS\CD'S\F12\PARKER WATER AND SANITATION\F12 WATER DETAILS.DWG, CODYA, 6/17/2021 9:50 AM

No.	Revisions	Date	Init.	Appr.	Date

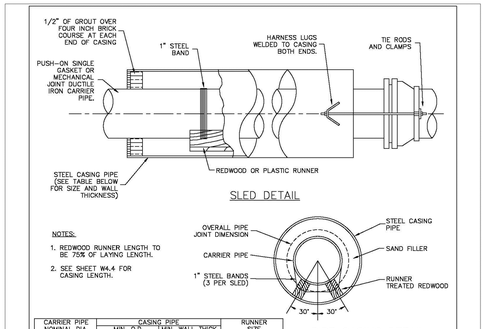
CVL a Westwood team
10333 E. Dry Creek Rd.
Suite 240
Englewood, CO 80112
Tel: 720.482.9526
www.cvlinc.net
westwoodps.com

HR 935 LLC
7353 South Alton Way
CENTENNIAL, CO 80112

TRAILS AT CROWFOOT
FILING 12 CONSTRUCTION DRAWINGS
WATER DETAILS

DRAWN BY: JF | SCALE: AS SHOWN
CHECKED BY: JJJ | FILE NO: 8130283701
DATE: SEPTEMBER 2017

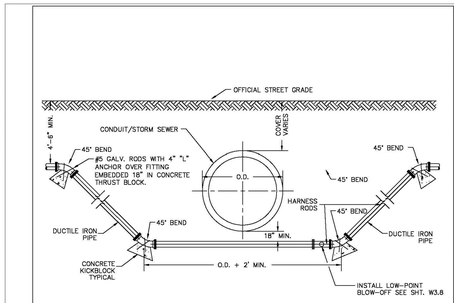
SHEET NUMBER 14



CARRIER PIPE NOMINAL DIA.	CASING PIPE MIN. O.D.	CASING PIPE MIN. WALL THICK.	RUNNER SIZE
4"	12"	0.188"	2" X 4"
6"	16"	0.250"	2" X 4"
8"	18"	0.282"	2" X 4"
10"	22"	0.344"	2" X 4"
12"	28"	0.406"	2" X 6"
20"	32"	0.469"	2" X 6"

PARKER WATER & SANITATION DISTRICT	
BORE CASING DETAILS	
SCALE: NONE	DATE: 2/96
APPROVED: PVR DIRECTOR OF ENGINEERING	2/00 1/16 10/16

2016 REVISION — SHEET W4.5

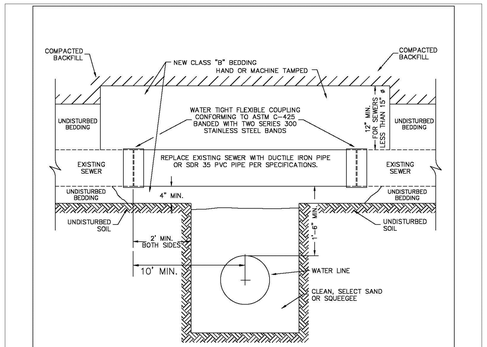


NOTES:

1. LENGTH OF EXTENSION OF PIPE AND HARNESS RODS SHALL BE IN ACCORDANCE WITH THESE ENGINEERING STANDARDS.
2. ALL WATER MAINS TWELVE (12") INCHES OR SMALLER, WHICH CROSS UNDER CONDUITS/STORM SEWER SHALL BE DUCTILE IRON OR PVC PER SPECIFICATIONS.
3. A BORED CROSSING MAY BE REQUIRED BY THE ENGINEER.
4. CONCRETE KICKBLOCKS PER SHEET W3.18.

PARKER WATER & SANITATION DISTRICT	
CONDUIT OR STORM SEWER CROSSING	
SCALE: NONE	DATE: 2/96
APPROVED: PVR DIRECTOR OF ENGINEERING	9/98 10/16 2/00 12/07 1/18

2016 REVISION — SHEET W4.6



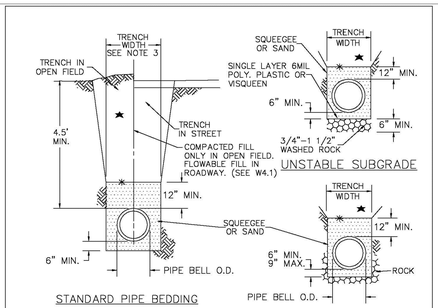
SEWER CROSSING UNDER LESS THAN 18" BETWEEN PIPES

1. PIPE SHALL BE WRAPPED WITH FELT LAYER BEFORE ENCASING.

SECTION A–A

PARKER WATER & SANITATION DISTRICT	
CROSSING STORM & SANITARY SEWERS	
SCALE: NONE	DATE: 2/96
APPROVED: PVR DIRECTOR OF ENGINEERING	1/16 10/16

2016 REVISION — SHEET W4.7

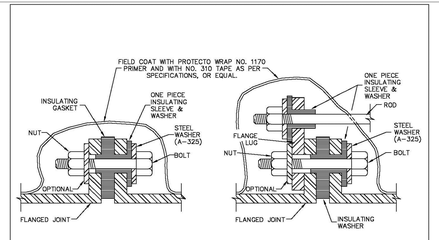


NOTES:

1. MIN.COVER TO BE BELOW FINAL STREET GRADE CONSTRUCTION OF WATER MAIN MAY NOT START UNTIL FINAL GRADE WITHIN 1 FOOT.
2. TRENCH TO BE BRACED OR SHEETED AS NECESSARY FOR THE PROTECTION OF OTHER UTILITIES AND TO MEET OSHA SAFETY REQUIREMENT.
3. TRENCH WIDTH SHALL NOT BE MORE THAN 16" NOR LESS THAN 12" WIDER THAN THE LARGEST OUTSIDE DIAMETER OF THE PIPE LAID THEREIN (BELL OR COUPLING O.D. IF APPLICABLE). REFER TO SHEET W4.1 FOR DIMENSIONS.

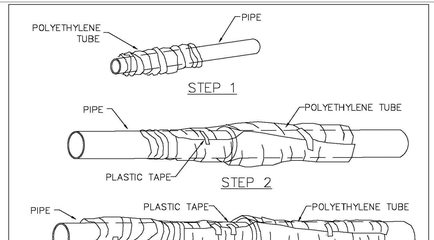
PARKER WATER & SANITATION DISTRICT	
BEDDING DETAILS	
SCALE: NONE	DATE: 2/96
APPROVED: PVR DIRECTOR OF ENGINEERING	1/16 10/16

2016 REVISION — SHEET W4.8



PARKER WATER & SANITATION DISTRICT	
INSULATED JOINTS, RODS AND MECHANICAL COUPLINGS	
SCALE: NONE	DATE: 2/96
APPROVED: PVR DIRECTOR OF ENGINEERING	1/16 10/16

2016 REVISION — SHEET W4.10



FIELD INSTALLATION – POLYETHYLENE WRAP

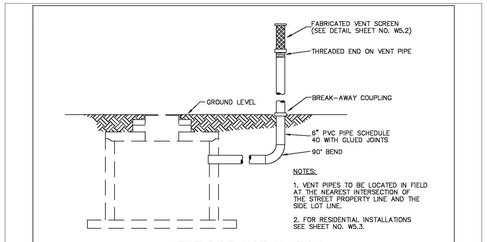
STEP 1 – PLACE TUBE OF POLYETHYLENE MATERIAL ON PIPE PRIOR TO LOWERING IT INTO TRENCH.

STEP 2 – PULL THE TUBE OVER THE LENGTH OF THE PIPE. TAPE TUBE TO PIPE AT JOINT. FOLD MATERIAL AROUND THE ADJACENT SPIGOT END AND WRAP WITH TAPE TO HOLD THE PLASTIC TUBE IN PLACE.

STEP 3 – OVERLAP FIRST TUBE WITH ADJACENT TUBE AND SECURE WITH PLASTIC ADHESIVE TAPE. THE POLYETHYLENE TUBE MATERIAL COVERING THE PIPE SHALL BE LOOSE. EXCESS MATERIAL SHALL BE NEATLY DRAWN UP AROUND THE PIPE BARREL, FOLDED ON TOP OF PIPE AND TAPED IN PLACE.

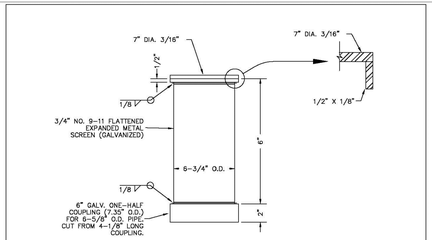
PARKER WATER & SANITATION DISTRICT	
POLYETHYLENE WRAP	
SCALE: NONE	DATE: 2/96
APPROVED: PVR DIRECTOR OF ENGINEERING	1/16 10/16

2016 REVISION — SHEET W4.11



PARKER WATER & SANITATION DISTRICT	
VENT PIPE INSTALLATION AND DETAILS	
SCALE: NONE	DATE: 2/96
APPROVED: PVR DIRECTOR OF ENGINEERING	1/16 10/16

2016 REVISION — SHEET W5.1



PARKER WATER & SANITATION DISTRICT	
6" DIA. VENT PIPE SCREEN	
SCALE: NONE	DATE: 2/96
APPROVED: PVR DIRECTOR OF ENGINEERING	1/16 10/16

2016 REVISION — SHEET W5.2

CALL 811
TWO WORKING DAYS
BEFORE YOU DIG
1-800-922-1987
UNCC UTILITY NOTIFICATION CENTER OF COLORADO

N:\PROJECTS\HESS RANCH\CAD\ENGINEERING\SHEET SETS\CD'S\F12\PARKER WATER AND SANITATION\F12 WATER DETAILS.DWG, CODYA, 6/17/2021 9:50 AM

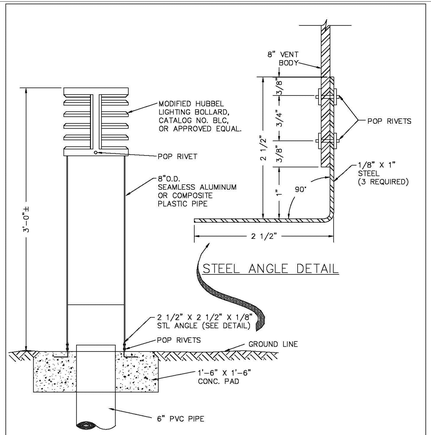
No.	Revisions	Date	Init.	Appr.	Date

CVL a Westwood team
10333 E. Dry Creek Rd. Suite 240 Englewood, CO 80112 Tel: 720.482.9526 www.cvlfirm.com westwoodps.com

HR 935 LLC
7353 South Alton Way
CENTENNIAL, CO 80112

TRAILS AT CROWFOOT
FILING 12 CONSTRUCTION DRAWINGS
WATER DETAILS

SHEET NUMBER	DRAWN BY:	SCALE:	FILE NO:
15	JF	AS SHOWN	8130283701
	CHECKED BY: JJJ		
	DATE: SEPTEMBER 2017		

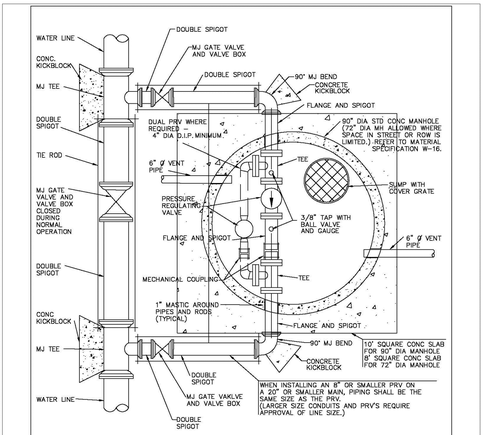


PARKER WATER & SANITATION DISTRICT

RESIDENTIAL ONLY VENT ASSEMBLY

SCALE: NONE	DATE: 2/96
APPROVED: PVR, DIRECTOR OF ENGINEERING	1/16 10/16

2016 REVISION — SHEET W5.3



NOTES:

1 – A RECTANGULAR VAULT IS REQUIRED WHERE TELEMETRY OR ELECTRICAL EQUIPMENT IS ANTICIPATED INSIDE THE VAULT.

2 – ACCESS STAIRS WITH DOOR OUTSIDE OF PAVEMENT MAY BE REQUIRED ON STREETS WITH HEAVY TRAFFIC.

3 – FOR ELEVATION VIEW SEE CROSS SECTION DWG SHEET NO. W5.5.

4 – DO NOT PLACE SUMP DIRECTLY UNDER MANHOLE.

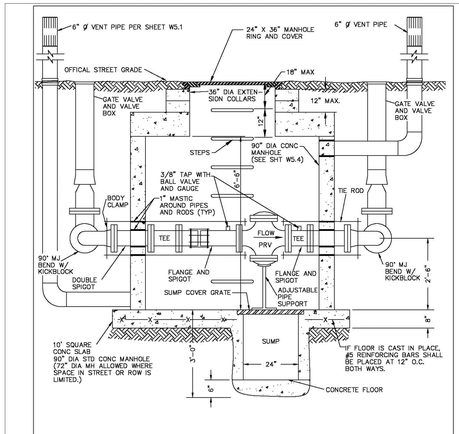
5 – POLYETHENE STEPS SHALL BE INSTALLED.

PARKER WATER & SANITATION DISTRICT

PRESSURE REGULATING VALVE MANHOLE INSTALLATION TYPICAL PLAN

SCALE: NONE	DATE: 2/96
APPROVED: PVR, DIRECTOR OF ENGINEERING	2/00 3/03 1/16 10/16

2016 REVISION — SHEET W5.4



NOTES:

1 – SEE SHT. W5.4 FOR PLAN VIEW AND ADDITIONAL NOTES.

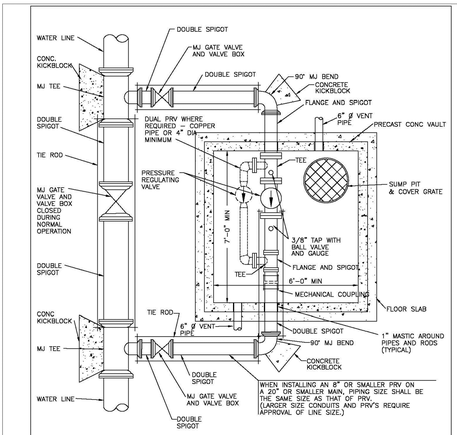
2 – POLYETHENE STEPS SHALL BE INSTALLED. AND ANY STEPS IN CHIMNEY SECTION SHALL BE INSTALLED AS A HANDHOLD & SHALL NOT IMPEDE ACCESS THRU THE CHIMNEY.

PARKER WATER & SANITATION DISTRICT

PRESSURE REGULATING VALVE MANHOLE INSTALLATION CROSS SECTION

SCALE: NONE	DATE: 2/96
APPROVED: PVR, DIRECTOR OF ENGINEERING	4/01 1/03 1/16 10/16

2016 REVISION — SHEET W5.5



NOTES:

1 – A RECTANGULAR VAULT IS REQUIRED WHERE TELEMETRY OR ELECTRICAL EQUIPMENT INSIDE THE VAULT IS ANTICIPATED.

2 – ACCESS STAIRS WITH DOOR OUTSIDE OF PAVEMENT MAY BE REQUIRED ON STREETS WITH HEAVY TRAFFIC.

3 – FOR ELEVATION VIEW SEE CROSS SECTION DWG SHEET NO. W5.7.

4 – SUMP PUMP AND VENT FAN REQUIRED IN VAULTS WITH ELECTRICAL OR TELEMETRY EQUIPMENT.

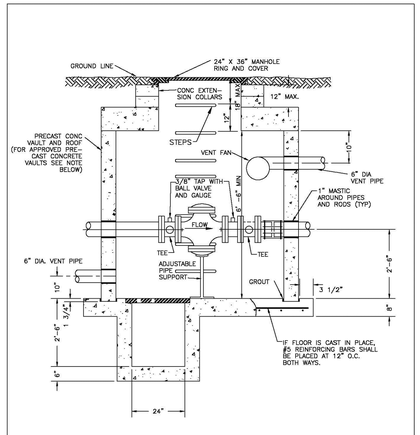
5 – POLYETHENE STEPS SHALL BE INSTALLED.

PARKER WATER & SANITATION DISTRICT

PRESSURE REGULATING VALVE RECTANGULAR VAULT TYPICAL PLAN

SCALE: NONE	DATE: 2/96
APPROVED: PVR, DIRECTOR OF ENGINEERING	2/00 3/03 1/16 10/16

2016 REVISION — SHEET W5.6



NOTES:

1 – APPROVED PRECAST CONCRETE VAULTS PER MATERIAL SPECIFICATIONS W-16.

2 – A PERMIT IS REQUIRED FOR SUMP PUMP DISCHARGE TO STORM SEWERS.

3 – SEE SHEET W5.6 FOR PLAN VIEW AND ADDITIONAL NOTES.

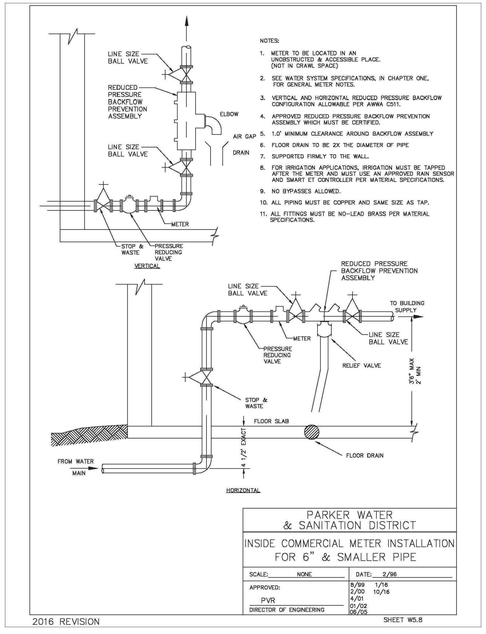
4 – POLYETHENE STEPS SHALL BE INSTALLED.

PARKER WATER & SANITATION DISTRICT

PRESSURE REGULATING VALVE RECTANGULAR VAULT CROSS SECTION

SCALE: NONE	DATE: 2/96
APPROVED: PVR, DIRECTOR OF ENGINEERING	4/01 3/03 1/16 10/16

2016 REVISION — SHEET W5.7

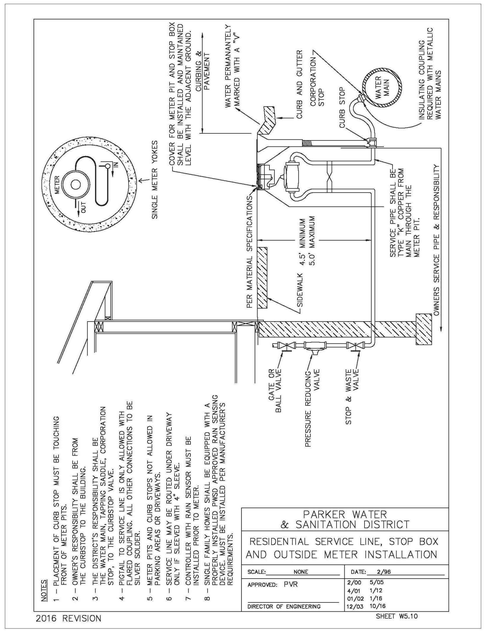


PARKER WATER & SANITATION DISTRICT

INSIDE COMMERCIAL METER INSTALLATION FOR 6" & SMALLER PIPE

SCALE: NONE	DATE: 2/96
APPROVED: PVR, DIRECTOR OF ENGINEERING	8/99 1/16 2/00 10/16 4/01 01/02 09/05

2016 REVISION — SHEET W5.8



NOTES

1 – PLACEMENT OF CURB STOP MUST BE TOUCHING FRONT OF METER PITS.

2 – OWNER'S RESPONSIBILITY SHALL BE FROM CURB STOP TO THE BUILDING.

3 – THE DISTRICT'S RESPONSIBILITY SHALL BE FROM THE CORPORATION STOP TO THE CURB STOP VALVE.

4 – PVC TO SERVICE LINE IS ONLY ALLOWED WITH FLARED JOINTS. ALL OTHER CONNECTIONS TO BE SILVER SOLDER.

5 – METER PITS AND CURB STOPS NOT ALLOWED IN DRIVEWAYS. SERVICE LINE MAY BE ROUTED UNDER DRIVEWAY ONLY IF SLEEVED WITH 4" SLEEVE.

6 – CONTROLLER WITH RAIN SENSOR MUST BE INSTALLED AT THE METER.

7 – SINGLE FAMILY HOMES SHALL BE EQUIPPED WITH A PRESSURE REGULATING VALVE AND SHALL BE INSTALLED PER MANUFACTURERS REQUIREMENTS.

8 – PROPER BEDDING AND BACKFILL IS REQUIRED PER W-16.

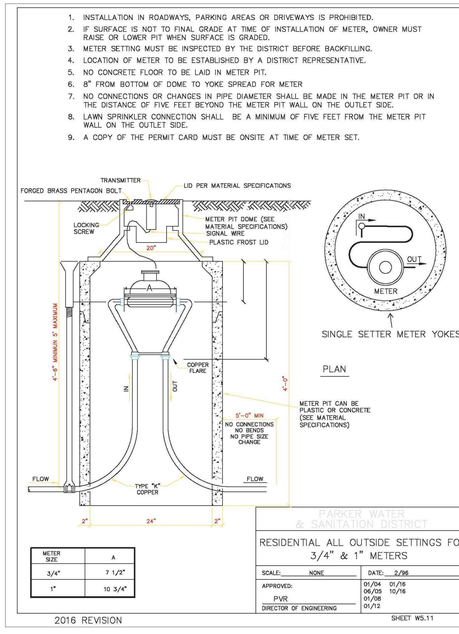
PARKER WATER & SANITATION DISTRICT

RESIDENTIAL SERVICE LINE, STOP BOX AND OUTSIDE METER INSTALLATION

SCALE: NONE	DATE: 2/96
APPROVED: PVR, DIRECTOR OF ENGINEERING	2/00 5/05 4/01 1/12 01/02 1/16 12/03 10/16

2016 REVISION — SHEET W5.10

1. INSTALLATION IN ROADWAYS, PARKING AREAS OR DRIVEWAYS IS PROHIBITED.
2. IF SURFACE IS NOT TO FINAL GRADE AT TIME OF INSTALLATION OF METER, OWNER MUST RAISE OR LOWER PIT WHEN SURFACE IS GRADED.
3. METER SETTING MUST BE INSPECTED BY THE DISTRICT BEFORE BACKFILLING.
4. LOCATION OF METER TO BE ESTABLISHED BY A DISTRICT REPRESENTATIVE.
5. NO CONCRETE FLOOR TO BE LAID IN METER PIT.
6. 8" FROM BOTTOM OF DOME TO YOKE SPREAD FOR METER
7. NO CONNECTIONS OR CHANGES IN PIPE DIAMETER SHALL BE MADE IN THE METER PIT OR IN THE DISTANCE OF FIVE FEET BEYOND THE METER PIT WALL ON THE OUTLET SIDE.
8. LAWN SPRINKLER CONNECTION SHALL BE A MINIMUM OF FIVE FEET FROM THE METER PIT WALL ON THE OUTLET SIDE.
9. A COPY OF THE PERMIT CARD MUST BE ONSITE AT TIME OF METER SET.



METER SIZE	A
3/4"	7 1/2"
1"	10 3/4"

PARKER WATER & SANITATION DISTRICT

RESIDENTIAL ALL OUTSIDE SETTINGS FOR 3/4" & 1" METERS

SCALE: NONE	DATE: 2/96
APPROVED: PVR, DIRECTOR OF ENGINEERING	01/04 01/16 06/05 10/16 01/06 01/12

2016 REVISION — SHEET W5.11

CALL 811
TWO WORKING DAYS
BEFORE YOU DIG
1-800-922-1987
UNCC UTILITY NOTIFICATION CENTER OF COLORADO

N:\PROJECTS\HESS RANCH\CAD\ENGINEERING\SHEET SETS\CD'S\F12\PARKER WATER AND SANITATION\F12 WATER DETAILS.DWG, CODYA, 6/17/2021 9:50 AM

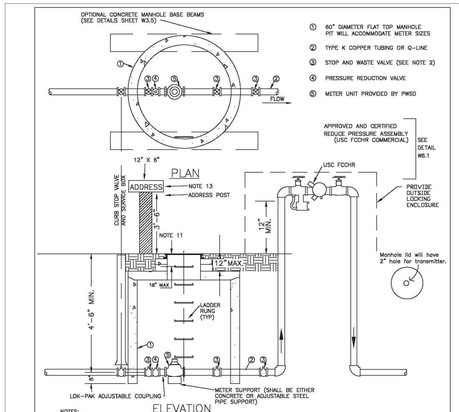
No.	Revisions	Date	Init.	Appr.	Date

CIVIL
10333 E. Dry Creek Rd.
Suite 240
Englewood, CO 80112
Tel:720-482-9526
www.civilinc.net
a Westwood team

HR 935 LLC
7353 South Alton Way
CENTENNIAL, CO 80112

TRAILS AT CROWFOOT
FILING 12 CONSTRUCTION DRAWINGS
WATER DETAILS

SHEET NUMBER	DRAWN BY:	CHECKED BY:	DATE:	SCALE:	FILE NO:
16	JF	JJJ	SEPTEMBER 2017	AS SHOWN	8130283701



NOTES:

1 – MANHOLE BASE BEAMS SHALL BE REQUIRED FOR INSTALLATIONS IN DRIVEWAYS, OR PARKING AREAS.
2 – STOP AND WASTE VALVE TO BE INSTALLED.
3 – JOINTS INSIDE METER VAULT SHALL BE EITHER THREADED OR SOLDERED.
4 – SEE WATER SYSTEM SPECIFICATIONS FOR GENERAL METER NOTES.
5 – NO CONCRETE TO BE LAID IN FLOOR OF METER M.H.
6 – METER SHALL BE FLANGED WITH BRASS COMPANION FLANGES.
7 – NO CONNECTIONS OR CHANGES IN PIPE DIAMETER SHALL BE MADE IN THE METER PIT OR IN THE DISTANCE OF FIVE FEET BEYOND THE METER PIT ON THE OUTLET SIDE.
8 – RAIN SENSOR AND ET CONTROLLER MUST BE PRESENT.
9 – VALVE MUST BE CENTERED IN STOP BOX. NO DEBRIS OR STANDING WATER IN STOP BOX.
10 – PLACEMENT OF STOP BOX MUST BE TOUCHING FRONT OF METER PIT.
11 – SEE SHEET W3.19 FOR MANHOLE RING AND COVER DETAIL.
12 – BACKFLOW MUST BE INSTALLED PRIOR TO SETTING METER
13 – LETTERS ON POST OR BACKFLOW ENCLOSURE 2" OR GREATER.
14 – RAIN SENSOR AND ET CONTROLLER MUST BE PROVIDED AND INSTALLED PER MANUFACTURER'S REQUIREMENTS.

METER	YOKE DISTANCE
1.5"	13.25" WITH ADJUSTABLE FLANGE FOR GASKET
2"	17.25" WITH ADJUSTABLE FLANGE FOR GASKET

IRRIGATION ONLY

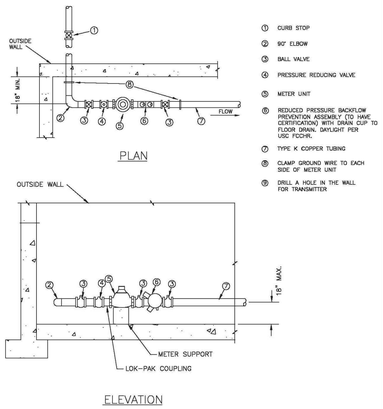
NOT TO BE USED IN COMMERCIAL OR NON-SINGLE FAMILY RESIDENTIAL WITHOUT EXPRESS PERMISSION OF THE PWSD ENGINEER.

PARKER WATER & SANITATION DISTRICT

OUTSIDE SETTING FOR 1 1/2" & 2" METER FOR IRRIGATION

SCALE: NONE	DATE: 2/96
APPROVED: PVR	1/04 06/05 1/16 10/16
DIRECTOR OF ENGINEERING	

2016 REVISION — SHEET W5.12



NOTES

1 – PIPE JOINT SHALL BE THREADED OR SOLDERED WITH SILVER SOLDER.
2 – INSTALLATION MUST ALLOW ACCESS FOR MAINTENANCE AND BE PROTECTED FROM FREEZING.
3 – SEE WATER SYSTEM SPECIFICATIONS FOR GENERAL METER NOTES.
4 – COMPANION FLANGES SHALL BE BRASS.
5 – METER SUPPORT SHALL BE EITHER CONCRETE OR ADJ. STEEL PIPE (SEE SHEET W3.10)
6 – 1.0" MINIMUM CLEARANCE AROUND BACKFLOW DEVICE
7 – FLOOR DRAIN TO BE 2X PIPE SIZE
8 – FOR IRRIGATION USES, ADD RAIN SENSOR AND SMART E.T. CONTROLLER

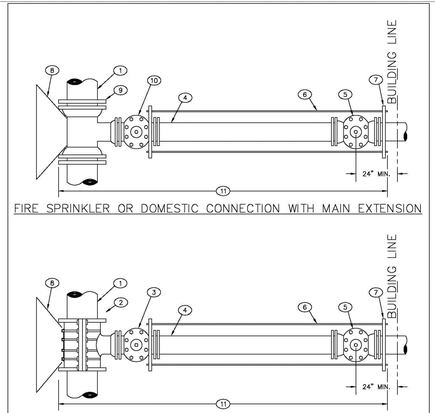
METER	YOKE DISTANCE
1.5"	13.25" WITH ADJUSTABLE FLANGE FOR GASKET
2"	17.25" WITH ADJUSTABLE FLANGE FOR GASKET

PARKER WATER & SANITATION DISTRICT

INSIDE SETTING FOR 1 1/2" & 2" METER

SCALE: NONE	DATE: 2/96
APPROVED: PVR	8/99 01/02 01/16 2/00 06/05 10/16 4/01 07/06
DIRECTOR OF ENGINEERING	

2016 REVISION — SHEET W5.14

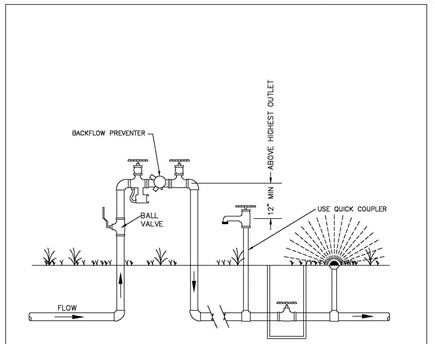


PARKER WATER & SANITATION DISTRICT

3" AND LARGER DOMESTIC AND FIRE SPRINKLER CONNECTIONS

SCALE: NONE	DATE: 2/96
APPROVED: PVR	1/16 10/16
DIRECTOR OF ENGINEERING	

2016 REVISION — SHEET W5.18



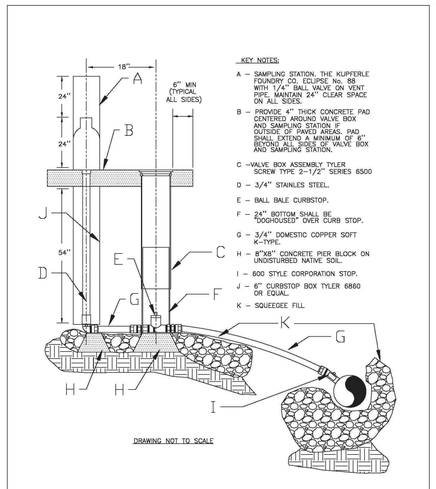
NOTE:
1. ALL IRRIGATION SYSTEMS MUST BE CONNECTED DOWN STREAM OF METER.
2. PROVIDE ENCLOSURE.

PARKER WATER & SANITATION DISTRICT

REDUCED PRESSURE BACKFLOW

SCALE: NONE	DATE: 2/96
APPROVED: PVR	2004 06/05 1/16 10/16
DIRECTOR OF ENGINEERING	

2016 REVISION — SHEET W6.1



KEY NOTES:

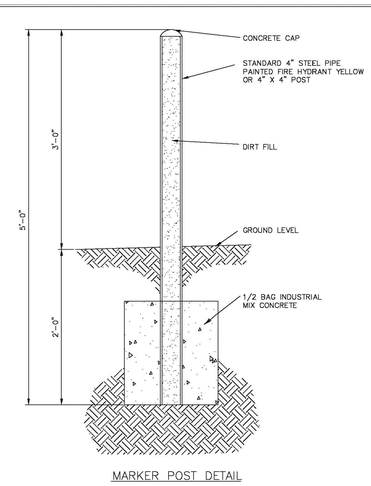
A – SAMPLING STATION. THE KUPFERLE FOUNDRY CO. ECLIPSE No. 88 WITH 1/4" BALL VALVE ON VENT PIPE. MAINTAIN 24" CLEAR SPACE ON ALL SIDES.
B – PROVIDE 4" THICK CONCRETE PAD CENTERED AROUND VALVE BOX AND SAMPLING STATION IF OUTSIDE OF PAVED AREAS. PAD SHALL EXTEND A MINIMUM OF 6" BEYOND VALVE BOX AND SAMPLING STATION.
C –VALVE BOX ASSEMBLY TYLER SCREW TYPE 2–1/2" SERIES 6500
D – 3/4" STAINLES STEEL.
E – BALL BALE CURBSTOP.
F – 24" BOTTOM SHALL BE "DOGHOUSED" OVER CURB STOP.
G – 3/4" DOMESTIC COPPER SOFT K–TYPE.
H – 8"X8" CONCRETE PIER BLOCK ON UNDISTURBED NATIVE SOIL.
I – 600 STYLE CORPORATION STOP.
J – 6" CURBSTOP BOX TYLER 6860 OR EQUAL.
K – SQUEEGEE FILL

PARKER WATER & SANITATION DISTRICT

WATER QUALITY SAMPLING STATION

SCALE: NONE	DATE: 2/96
APPROVED: PVR	2004 06/05 1/16 10/16
DIRECTOR OF ENGINEERING	

2016 REVISION — SHEET W6.2



STEEL PIPE
STENCILED IDENTIFICATION MARKS WITH BLACK PAINT ON POSTS SHALL FACE THE APPURTENANCE, WITH 2" STENCILS INDICATING TYPE OF APPURTENANCE (MH, 12" VALVE, ETC.) AND THE DISTANCE IN FEET AND INCHES FROM POST.

REDWOOD POST
ROUTER LETTERS AND NUMBERS INTO POST. PAINT LETTERS AND NUMBERS BLACK. OR CUT NUMBERS INTO THE WOOD.

PARKER WATER & SANITATION DISTRICT

MARKER POST

SCALE: NONE	DATE: 2/96
APPROVED: PVR	2/00 10/16 4/01 12/07 1/16
DIRECTOR OF ENGINEERING	

2016 REVISION — SHEET W6.3

CALL 811
TWO WORKING DAYS
BEFORE YOU DIG
1-800-922-1987
UNCC UTILITY NOTIFICATION CENTER OF COLORADO

N:\PROJECTS\HESS RANCH\CAD\ENGINEERING\SHEET SETS\CD'S\F12\PARKER WATER AND SANITATION\F12 WATER DETAILS.DWG, CODYA, 6/17/2021 9:50 AM

No.	Revisions	Date	Init.	Appr.	Date

CVL
10333 E. Dry Creek Rd.
Suite 240
Englewood, CO 80112
Tel:720-482-9526
www.civilcat.net
a Westwood team
westwoodps.com

HR 935 LLC
7353 South Alton Way
CENTENNIAL, CO 80112

TRAILS AT CROWFOOT
FILING 12 CONSTRUCTION DRAWINGS
WATER DETAILS

SHEET NUMBER	DRAWN BY:	SCALE:	
17	JF	AS SHOWN	
	CHECKED BY: JJJ	FILE NO:	8130283701
	DATE: SEPTEMBER 2017		