WATER AND SANITARY SEWER CONSTRUCTION PLANS
PARKER POINTE

LOTS 1 THRU 15 AND TRACTS A AND B, PARKER POINTE FILING NO. 1
A PART OF SECTION 3, TOWNSHIP 7 SOUTH, RANGE 66 WEST OF THE SIXTH PRINCIPAL MERIDIAN
TOWN OF PARKER, COUNTY OF DOUGLAS, STATE OF COLORADO

GENERAL NOTES:

1. TOPOGRAPHIC MAPPING AS OF 03/05/14 PREPARED BY ENGINEERING SERVICE COMPANY, INC. IF CONTRACTOR DOES NOT ACCEPT EXISTING TOPOGRAPHY AS SHOWN ON THE PLANS, WITHOUT EXCEPTION, THEN HE SHALL, AT HIS EXPENSE, HAVE NEW MAPPING PREPARED BY A REGISTERED LAND SURVEYOR AND SUBMIT IT TO THE OWNER FOR ACCEPTANCE AND APPROVAL.

2. CONTRACTOR SHALL REFER TO THE GRADING, EROSION AND SEDIMENT CONTROL (GESC) PLAN FOR ADDITIONAL REQUIREMENTS. NO WORK SHALL OCCUR UNTIL THE BMPs DEPICTED ON THE GESC HAVE BEEN INSTALLED AND ARE APPROVED BY THE CITY. THE CONTRACTOR SHALL ADHERE TO ALL TERMS AND CONDITIONS AS OUTLINED IN THE GENERAL PERMIT FOR STORM WATER DISCHARGE ASSOCIATED WITH CONSTRUCTION ACTIVITIES.

3. EXISTING CONTOURS ARE SHOWN AT 1-FOOT INTERVALS; PROPOSED OVERLOT CONTOURS ARE SHOWN AT 1-FOOT INTERVALS.

4. ALL EARTHWORK, GRADING, OVERLOT GRADING, BACKFILLING, FILLING, EXCAVATION, COMPACTION, PAVEMENT, AND FLATWORK SHALL BE IN CONFORMANCE WITH THE GEOTECHNICAL REPORT PREPARED BY XXXXXXXX INC. TITLED XXXXX, DATED XXXX. THE CONTRACTOR IS REQUIRED TO HAVE A SIGNED AND SEALED COPY OF THE REPORT AT THE SITE AT ALL TIMES. DURING CONSTRUCTION, IF UNANTICIPATED CONDITIONS ARE ENCOUNTERED, THE GEOTECHNICAL ENGINEER SHALL BE CONTACTED BY THE CONTRACTOR FOR RECOMMENDATIONS.

5. THE CONTRACTOR IS RESPONSIBLE FOR:

   a. VERIFYING ALL UTILITIES, WHETHER SHOWN OR NOT SHOWN, AND NOTIFYING THE APPROPRIATE UTILITY COMPANY PRIOR TO BEGINNING CONSTRUCTION. ALL UTILITIES TO REMAIN (MANHOLES, VALVE COVERS, CLEANOUTS, VAULTS, BOXES, ETC.) SHALL BE PROTECTED FROM DAMAGE AND ADJUSTED TO FINAL GRADE.

   b. PREPARING ANY TRAFFIC CONTROL PLANS, AS MAY BE REQUIRED TO PERFORM THE WORK, AND PROVIDING ALL NECESSARY TRAFFIC CONTROL (SIGNS, BARRICADES,FLAGMEN, LIGHTS, ETC) IN ACCORDANCE WITH THE MUTCD, CURRENT EDITION, AS REQUIRED FOR THE WORK. THE PLAN FOR TRAFFIC CONTROL SHALL BE SUBMITTED TO THE CITY FOR APPROVAL PRIOR TO COMMENCING ANY WORK IN THE RIGHTS-OF-WAY.

   c. OBTAINING ALL NECESSARY PERMITS AND APPROVALS REQUIRED TO PERFORM THE WORK AND TO OBTAIN A COPY OF ALL APPLICABLE CODES, LICENSES, SPECIFICATIONS, AND STANDARDS NECESSARY TO PERFORM THE WORK, AND BE FAMILIAR WITH THEIR CONTENTS PRIOR TO COMMENCING ANY WORK.

   d. KEEPING ONE COPY OF THE APPROVED CONSTRUCTION PLANS AND SPECIFICATIONS ON THE JOB SITE AT ALL TIMES. PRIOR TO THE START OF CONSTRUCTION, CONTRACTOR TO VERIFY WITH PROJECT ENGINEER THE LATEST REVISION DATE OF THE APPROVED CONSTRUCTION PLANS.

   e. COORDINATING PRIOR TO CONSTRUCTION WITH THE GEOTECHNICAL ENGINEER, THE CITY, AND UTILITY AND STORMWATER DISTRICT INSPECTORS TO IDENTIFY PROJECT INSPECTION AND TESTING REQUIREMENTS.

   f. KEEPING TRACK OF ALL APPROVED DEVIATIONS FROM THE PLANS AND PROVIDING THE PROJECT ENGINEER WITH AS-BUILT DRAWINGS OF ALL IMPROVEMENTS REQUIRED FOR THE WORK.

   g. COMPLYING WITH CITY GENERAL REQUIREMENTS, STANDARDS, AND SPECIFICATIONS.

   h. PROVIDING AS-BUILT DRAWINGS OF CONSTRUCTED UTILITIES UPON COMPLETION OF THE WORK.

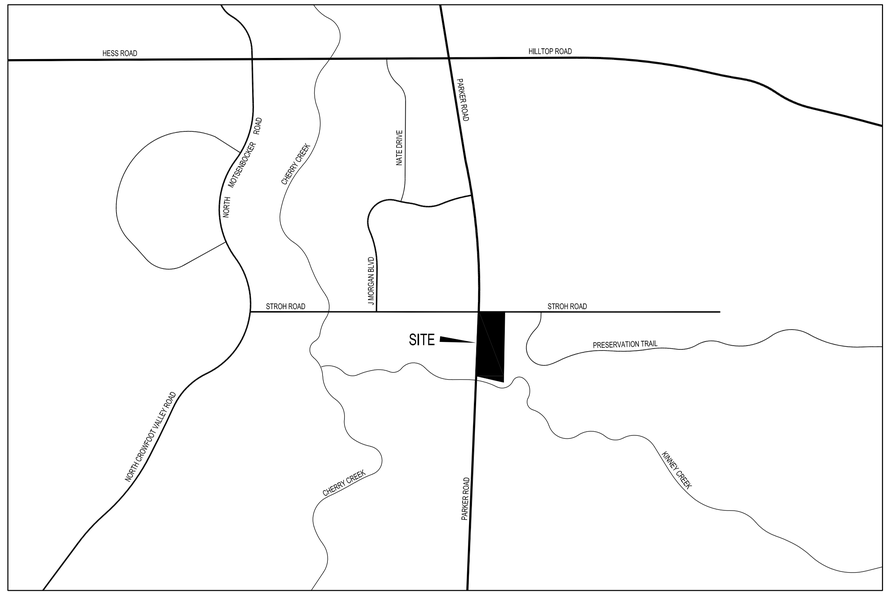

VICINITY MAP

SCALE: 1" = 500'

N

LEGAL DESCRIPTION

A TRACT OF LAND LOCATED IN SECTION 3, TOWNSHIP 7 SOUTH, RANGE 66 WEST OF THE 6TH P.M., DOUGLAS COUNTY, COLORADO, DESCRIBED AS FOLLOWS:
BEGINNING AT THE NORTHEAST CORNER OF SAID SECTION 3; THENCE RUNNING WEST, 486 FEET; THENCE SOUTH 2°20' WEST, 1330 FEET; THENCE SOUTH 78°30' EAST, 535 FEET; THENCE NORTH, 1444 FEET TO THE POINT OF BEGINNING,
EXCEPT THAT PORTION THEREOF LYING WITHIN EAST STROH ROAD AND
EXCEPT THAT PORTION THEREOF TAKEN BY THE DEPARTMENT OF TRANSPORTATION, STATE OF COLORADO BY RULE AND ORDER, CASE NO. 90CV484 RECORDED MAY 11, 1993 IN BOOK 1124 AT

COUNTY OF DOUGLAS,

BENCHMARK

BENCHMARK: DOUGLAS COUNTY SURVEY CONTROL MONUMENT TT15A – 3" DIAMETER DOUGLAS COUNTY GIS ALUMINUM CAP AT THE NE CORNER OF STROH ROAD AND SOUTH PARKER ROAD (US

ELEVATION: 5970.79 FEET (NAVD 1988 DATUM)

BASIS OF BEARING

BEARINGS ARE BASED ON THE NORTH LINE OF THE NE 1/4 OF SECTION 3, TOWNSHIP 7 SOUTH, RANGE 66 WEST, OF THE 6TH PRINCIPAL MERIDIAN BEARING S89°59'29"W AND BOUNDED BY THE MONUMENTS SHOWN HEREON.

PARKER WATER AND SANITATION PLAN SET

C7.00	WATER AND SEWER COVER SHEET
C7.01	WATER AND SEWER GENERAL NOTES
C7.09	OVERALL UTILITY PLAN
C7.10	WATER PLAN AND PROFILE
C7.11	WATER PLAN AND PROFILE
C7.12	WATER PLAN AND PROFILE
C7.13	WATER PLAN AND PROFILE
C7.14	SANITARY SEWER PLAN AND PROFILE
C7.15	SANITARY SEWER PLAN AND PROFILE
C7.90-C7.91	SANITARY SEWER DETAILS
C7.92-C7.94	WATER DETAILS
L100	TREE PRESERVATION PLAN
L101	LANDSCAPE PLAN - COMMON AREAS / ROW
L102	LANDSCAPE PLAN - COMMON AREAS / ROW
L103	LANDSCAPE PLAN - COMMON AREAS / ROW
L104	LANDSCAPE PLAN - COMMON AREAS / ROW
L105	LANDSCAPE PLAN - COMMON AREAS / ROW
L106	LANDSCAPE PLAN - COMMON AREAS / ROW
L107	LANDSCAPE DETAILS - COMMON AREAS / ROW LEGEND
L108	LANDSCAPE NOTES

TOWN OF PARKER
PUBLIC WORKS
20120 E. MAINSTREET
PARKER, CO 80138
(303) 840-9546

GAS PROVIDER
XCEL ENERGY
550 15TH STREET, SUITE 700
DENVER, CO 80202
1-800-628-2121

WATER/SEWER PROVIDER
PARKER WATER AND SANITATION DISTRICT
18100 WOODMAN DR, PARKER, CO 80134
PARKER, CO 80134
(303) 841-4627
DRAYTON SANDERSON

ELECTRIC PROVIDER
INTERMOUNTAIN RURAL ELECTRIC ASSOCIATION
5496 NORTH U.S. HIGHWAY 85
SEDALIA, CO 80135
(303) 688-3100

FIRE PROTECTION
SOUTH METRO FIRE AND RESCUE
9195 EAST MINERAL AVENUE
CENTENNIAL, CO 80112
(720) 989-2244
CONTACT: RANDY CAPRA

CIVIL ENGINEER
PERCEPTION DESIGN GROUP, INC.
6901 S. PIERCE ST., SUITE #315
LITTLETON, CO 80128
(303) 232-8088
CONTACT: JERRY DAVIDSON

DEVELOPER
PARKER & STROH, LLC
975 LINCOLN STREET, SUITE 204
DENVER, CO 80203
(303) 699-3368
CONTACT: DAN YACOVETTA

ARCHITECT
IRELAND DEAN
425 WILCOX ST, STE 120
CASTLE ROCK, CO 80104
(720) 878-6534
CONTACT: SHANNIN ALBERS

SURVEYOR
ENGINEERING SERVICE COMPANY
1300 SOUTH POTOMAC STREET, SUITE 126
AURORA, CO 80012
(303) 337-1393
CONTACT: CHIP BECKSTROM

UTILITY NOTES

1. ROADWAY DIMENSIONS ARE FROM FL-FL, 1-FOOT PAN IS PROPOSED ONSITE.
2. ALL UTILITY CONSTRUCTION SHALL CONFORM TO PARKER WATER AND SANITATION DISTRICT AND CRITERIA REFERENCE. LOCAL AGENCY INFRASTRUCTURE DESIGN AND CONSTRUCTION STANDARDS.
3. ALL MATERIALS AND WORKMANSHIP SHALL BE SUBJECT TO INSPECTION BY THE PARKER WATER AND SANITATION DISTRICT THE DISTRICT RESERVES THE RIGHT TO ACCEPT OR REJECT ANY SUCH MATERIALS AND WORKMANSHIP THAT DOES NOT CONFORM TO ITS STANDARDS AND SPECIFICATIONS.
4. THE CONTRACTOR SHALL NOTIFY THE TOWN OF PARKER PUBLIC WORKS AND PARKER WATER AND SANITATION DISTRICT A MINIMUM OF 48 HOURS AND A MAXIMUM OF 96 HOURS PRIOR TO STARTING CONSTRUCTION.
5. THE CONTRACTOR IS RESPONSIBLE FOR LOCATING THE HORIZONTAL AND VERTICAL LOCATION OF ALL EXISTING UTILITIES. EXISTING UTILITIES SHOWN ON THIS PLANS ARE BASED ON THE BEST AVAILABLE INFORMATION AT THE TIME OF DESIGN AND DO NOT REFLECT A COMPLETE SURVEY OF EXISTING UTILITIES. CONTACT THE ENGINEER WITH DISCREPANCIES.
6. CONTRACTOR SHALL VERIFY THE STUB TIE IN ELEVATION PRIOR TO START OF CONSTRUCTION. THE ELEVATION OF THE STUB SHALL BE COORDINATED WITH THE ENGINEER PRIOR TO SANITARY SEWER CONSTRUCTION.
7. SAWCUT OF EXISTING STREETS SHALL BE IN CONFORMANCE WITH TOWN STANDARDS. CUTS SHALL STRAIGHT WITH CLEAN EDGES. REMOVE EXISTING CURB AND GUTTER TO NEAREST JOINT RETURN ALONG EXISTING LINE AND GRADE.
8. THE OWNER AND OR THEIR REPRESENTATIVE SHALL BE RESPONSIBLE FOR COORDINATION WITH EXISTING FRANCHISE UTILITIES TO INCLUDE COMCAST, XCEL, CENTURY LINK OR OWNERS OF EXISTING DRY UTILITY LINES.
9. EXISTING UTILITY SURFACE APPURTENANCES SHALL BE RAISED TO FINISHED GRADE, THIS INCLUDES BUT IS NOT LIMITED TO MANHOLE LIDS, VALVE COVERS.
10. SITE SURVEY IS PROVIDED BY ESC DATED 2-8-2016.
11. THE CONTRACTOR SHALL HAVE AN APPROVED SET OF CONSTRUCTION PLANS ON SITE AT ALL TIMES. THE CONTRACTOR IS RESPONSIBLE FOR OBTAINING ALL NECESSARY PERMITS FOR THE CONSTRUCTION, NOTIFYING AND SCHEDULING LOCAL AGENCIES INSPECTIONS.
12. ALL PIPE LENGTHS ARE MEASURED FROM CENTER OF FITTING TO CENTER OF FITTING STATIONING IS ALIGN DRIVE CENTERLINE AND CENTERLINE OF PIPE UNLESS OTHERWISE NOTED.
13. ELEVATIONS ARE FINISHED GRADE ELEVATION UNLESS OTHER WISE NOTED.

WATER QUANTITIES

6" G.V.	12	EA
6" HYDRANT ASSY.	10	EA
8" G.V.	15	EA
8"X6" TEE	13	EA
8"X8" TEE	5	EA
8" 45º BEND	4	EA
8" PVC	2715	LF
6" DIP	237	LF
TIE TO EXISTING	3	EA
AIR VAC / RELEASE VALVE	3	EA
6" PLUG	2	EA
6" CAP	2	EA
LOWERING INCLUDING FITTINGS	6	EA
LOW POINT BLOWOFF	6	EA

SANITARY SEWER QUANTITIES

DESCRIPTION	QUANTITY	UNIT
SANITARY SEWER		
4' DIAMETER SAN. MANHOLE	10	EA
8" PVC	1949	LF
6" PVC	337	LF
SERVICE CAP	15	EA
18" BORING AND CASING	180	LF

ENGINEER

HEREBY AFFIRM THAT THESE CONSTRUCTION PLANS FOR PARKER POINTE CONSTRUCTION PLANS WERE PREPARED BY ME (OR UNDER MY DIRECT SUPERVISION) IN ACCORDANCE WITH THE REQUIREMENTS OF THE LOCAL AGENCY STANDARDS AND SPECIFICATIONS. FOR AND ON BEHALF OF PERCEPTION DESIGN GROUP.

JERRY W. DAVIDSON, P.E.
PROFESSIONAL ENGINEER REGISTRATION NO. 30226
PERCEPTION DESIGN GROUP, INC.

PARKER WATER AND SANITATION DISTRICT

THE DISTRICT INSPECTOR MUST BE NOTIFIED AT LEAST 48 HOURS PRIOR TO START OF CONSTRUCTION. CALL PARKER WATER AND SANITATION DISTRICT AT 303-841-4627. THE DISTRICT WILL PROVIDE PERIODIC INSPECTIONS OF THE WORK. 24 HOUR NOTICE TO THE INSPECTOR IS REQUIRED FOR SCHEDULING INSPECTIONS.
ANY WORK ACCOMPLISHED WITHOUT THE APPROVAL OF THE INSPECTOR WILL BE SUBJECT TO REJECTION. REVIEWED FOR CONFORMANCE TO PARKER WATER AND SANITATION DISTRICT STANDARDS.

BY:_____
(DISTRICT REPRESENTATIVE)

DATE:_____

APPROVED FOR CONSTRUCTION:
PARKER WATER AND SANITATION DISTRICT
BY:_____
(DISTRICT ENGINEER)

DATE:_____

ALL FIRE HYDRANTS SHALL BE INSTALLED ACCORDING TO WATER UTILITY STANDARDS. THE NUMBER AND LOCATION OF THE FIRE HYDRANTS AS SHOWN ON THE OVERALL UTILITY PLAN ARE CORRECT AS SPECIFIED BY THE TOWN OF PARKER, COMMUNITY DEVELOPMENT DEPARTMENT.

FIRE CODE OFFICIAL OR DESIGNATED REPRESENTATIVE DATE

(NOTE - UNDERGROUND FIRE LINE (UFL) SUBMITTAL DOCUMENTS MUST MEET THE REQUIREMENTS OF NFPA 24 WHEN SUBMITTING FOR REVIEW.)

CALL UTILITY NOTIFICATION
CENTER OF COLORADO
1-800-922-1987
CALL 2-BUSINESS DAYS IN ADVANCE BEFORE YOU DIG, GRADE, OR EXCAVATE FOR THE MARKING OF UNDERGROUND MEMBER UTILITIES.

CAUTION: NOTICE TO CONTRACTOR THE CONTRACTOR IS SPECIFICALLY CAUTIONED THAT THE LOCATION AND/OR ELEVATION OF EXISTING UTILITIES AS SHOWN ON THESE PLANS IS BASED ON RECORDS OF THE VARIOUS UTILITY COMPANIES AND, WHERE POSSIBLE, MEASUREMENTS TAKEN IN THE FIELD. THE INFORMATION IS NOT TO BE RELIED ON AS BEING EXACT OR COMPLETE. THE CONTRACTOR MUST CALL THE LOCAL UTILITY LOCATION CENTER AT LEAST 48 HOURS BEFORE ANY EXCAVATION TO REQUEST EXACT FIELD LOCATIONS OF THE UTILITIES. IT SHALL BE THE RESPONSIBILITY OF THE CONTRACTOR TO RELOCATE ALL EXISTING UTILITIES WHICH CONFLICT WITH THE PROPOSED IMPROVEMENTS SHOWN ON THE PLANS.

PERCEPTION DESIGN GROUP, INC.
6901 SOUTH PIERCE STREET, SUITE 315, LITTLETON, CO 80128 303-232-8088
WWW.PERCEPTIONDESIGNGROUP.COM

PREPARED UNDER THE DIRECT SUPERVISION OF
JERRY W. DAVIDSON, P.E.
COLORADO REG # 30226
FOR AND ON BEHALF OF
PERCEPTION DESIGN GROUP, INC.

	DATE	DESCRIPTION
1	08/31/18	FOURTH SUBMITTAL
2	05/25/18	THIRD SUBMITTAL
3	03/19/18	PWSD SUBMITTAL
4	02/28/18	SECOND SUBMITTAL
5	10/24/17	INITIAL SUBMITTAL

REVISIONS

WATER AND SANITARY COVER

PARKER POINTE
LOTS 1 THRU 15 AND TRACTS A AND B, PARKER POINTE FILING NO. 1
SOUTHEAST CORNER PARKER ROAD AND STROH ROAD
PARKER, COLORADO

design by: JWD
approved by: JWD
project no.: 2015-015
date: 10/01/17

SHEET
C7.00

\\PDG-NAS\PUBLIC\PROJECTS\2015-015 PARKER AND STROH\DWG\WATER AND SANITARY PLANS\2015-015 CDS - CVR & NOTES.DWG 8/31/2018 6:42 PM

PARKER WATER AND SANITATION DISTRICT
GENERAL NOTES

1. ALL MATERIALS AND WORKMANSHIP SHALL BE IN CONFORMANCE WITH THE PWSD ENGINEERING STANDARDS AND SPECIFICATIONS, LATEST VERSION.
2. THE CONTRACTOR SHALL CONTACT ALL APPROPRIATE UTILITY COMPANIES AND THE TOWN OF PARKER, DOUGLAS COUNTY AND OTHER NEIGHBORING CITIES AND TOWNS PRIOR TO THE BEGINNING OF ANY CONSTRUCTION. CONTRACTOR SHALL BE RESPONSIBLE FOR LOCATING ANY EXISTING UTILITY (INCLUDING DEPTHS) WHICH MAY CONFLICT WITH THE PROPOSED CONSTRUCTION. ALL EXISTING UTILITIES SHALL BE PROTECTED FROM DAMAGE BY THE CONTRACTOR. DAMAGED UTILITIES SHALL BE REPAIRED BY THE CONTRACTOR AT HIS OWN EXPENSE.
3. ALL ITEMS SHOWN ON THE PLANS AS EXISTING ARE SHOWN IN APPROXIMATE LOCATIONS ONLY. THE ACTUAL LOCATIONS MAY VARY FROM THE PLANS, ESPECIALLY IN THE CASE OF UNDERGROUND UTILITIES. WHENEVER THE CONTRACTOR DISCOVERS A DISCREPANCY IN LOCATIONS CONTACT THE PWSD IMMEDIATELY.
4. PWSD ENGINEER AND OTHER APPROVING AGENCIES ARE TO BE NOTIFIED 48 HOURS PRIOR TO CONSTRUCTION.
5. THE CONTRACTOR SHALL OBTAIN, AT HIS EXPENSE, ALL PERMITS NECESSARY TO PERFORM THE PROPOSED WORK.
6. ALL CONCRETE SHALL BE A MINIMUM OF CLASS A, 6 SACK, TYPE II, 3000-POUND COMPRESSION STRENGTH.
7. THE DESIGN ENGINEER SHALL SUBMIT ONE (1) SET OF "AS-BUILT" DRAWINGS AND ELECTRONIC FILES TO THE DISTRICT ENGINEER FOR APPROVAL BY DISTRICT. AFTER APPROVAL HAS BEEN GRANTED BY THE DISTRICT ENGINEER, FULL SIZE PRINTS SHALL BE TRANSMITTED TO THE PWSD OFFICE.
8. NO WORK SHALL BE BACKFILLED UNTIL THE CONSTRUCTION HAS BEEN INSPECTED AND APPROVED FOR BACKFILLING BY THE DISTRICT ENGINEER OR REPRESENTATIVE OF THE DISTRICT ENGINEER. ALL BACKFILL MATERIAL SHALL BE COMPACTED TO 95% STANDARD PROCTOR DENSITY. COMPACTION TESTS MUST BE SUBMITTED TO DISTRICT ENGINEER PRIOR TO PROBATIONARY ACCEPTANCE.
9. TRENCHES SHALL BE EXCAVATED AND THE PIPE EXPOSED FOR THE INSPECTION AT ANY LOCATION ON THE PROJECT IF SO ORDERED BY THE INSPECTOR.
10. THE CONTRACTOR WILL BE HELD RESPONSIBLE FOR THE PROPER FUNCTIONING OF LINES (WATER AND SEWER) FOR UP TO TWO (2) YEARS FROM THE DATE OF PROBATIONARY ACCEPTANCE OF THE LINES BY THE DISTRICT. ANY MALFUNCTION DURING THIS PERIOD OF GUARANTEE SHALL BE REMEDIED BY THE CONTRACTOR TO THE SATISFACTION OF THE DISTRICT ENGINEER AT NO EXPENSE TO THE DISTRICT.
11. SURFACE GRADES ARE TO BE WITHIN PLUS OR MINUS ONE FOOT OF FINISHED GRADE AND VERIFICATION OF COMPACTION RESULTS OBTAINED PRIOR TO THE INSTALLATION OF WATER AND SEWER LINES. RESULTS MUST BE SUBMITTED TO THE DISTRICT ENGINEER.
12. ALL SERVICES WILL BE PERMANENTLY MARKED ON CURB FACE AS FOLLOWS:
13. "X" FOR SANITARY SERVICE SEWERS
14. "V" FOR WATER SERVICES
15. NO TREES ALLOWED IN EASEMENTS OR WITHIN 8' OF WATER OR SANITARY SEWER MAINS IN RIGHT OF WAY.
16. THE CONTRACTOR SHALL HAVE IN HIS POSSESSION AT ALL TIMES ONE (1) SIGNED COPY OF THE PLANS WHICH HAVE BEEN APPROVED BY THE PWSD AND THE DISTRICT ENGINEER AND ONE (1) COPY OF THE LATEST PWSD SPECIFICATION MANUAL.

PARKER WATER AND SANITATION DISTRICT
WATER SYSTEM NOTES

17. ALL MATERIALS AND WORKMANSHIP SHALL BE IN CONFORMANCE WITH THE PWSD ENGINEERING STANDARDS AND SPECIFICATIONS, LATEST REVISION.
18. ALL WATER MAINS SHALL BE PER PWSD MATERIALS SPECIFICATIONS. ALL MATERIALS IN CONTACT WITH POTABLE WATER SHALL BE SUITABLE FOR CHLORINATED AND CHLORAMINATED WATER.
19. ALL BENDS, PLUGS, REDUCERS, AND FIRE HYDRANTS TO BE RODDED OR MEGA-LUGGED. ALL FITTINGS SHALL BE WRAPPED PER PWSD MATERIALS SPECIFICATIONS.
20. THERE SHALL BE A MINIMUM COVER OF 4.5 FEET OVER ALL WATER MAINS.
21. FIRE HYDRANTS SHALL CONFORM TO AWWA C-502 "DRY BARREL FIRE HYDRANTS" PIPE HYDRANT ASSEMBLIES PER PWSD SPECIFICATIONS.
22. ALL BENDS, TEES, FIRE HYDRANTS, BLOW-OFFS, AND PLUGS AT DEAD-END MAINS SHALL BE PROTECTED FROM THRUST WITH CONCRETE THRUST BLOCKS.
23. PRECAUTIONS SHALL BE TAKEN TO PROTECT THE INTERIOR OF PIPES, FITTINGS, AND VALVES AGAINST CONTAMINATION. ALL OPENINGS IN THE PIPELINE SHALL BE CLOSED WITH WATERTIGHT PLUGS WHEN PIPE LAYING IS STOPPED AT THE CLOSE OF THE DAY'S WORK OR FOR OTHER REASONS, SUCH AS REST BREAKS OR MEAL PERIODS.
24. VALVES IN STREETS ARE TO BE LOCATED AT PROPERTY LINE EXTENSIONS EXCEPT FOR TAPPING TEES; WHERE AN ADDITIONAL VALVE SHALL BE PLACED ON THE TAPPING TEE. OTHER LOCATIONS SHOWN ON THE PLANS.
25. WHEN NECESSARY TO LOWER OR RAISE WATER LINES AT STORM DRAINS AND OTHER UTILITY CROSSING, A MINIMUM CLEARANCE OF 1.5 FEET SHALL BE MAINTAINED BETWEEN OUTSIDE OF PIPES.
26. THE CONTRACTOR SHALL NOTIFY THE PWSD AT LEAST 48 HOURS PRIOR TO ANY CONSTRUCTION. IF WORK IS SUSPENDED FOR ANY PERIOD OF TIME AFTER INITIAL START-UP, THE CONTRACTOR MUST NOTIFY THE DISTRICT ENGINEER 48 HOURS PRIOR TO RE-START.
27. PIPE BEDDING SHALL BE A CLEAN, WELL-GRADED SAND OR SQUEEGEE SAND IN ACCORDANCE WITH PWSD STANDARDS AND SPECIFICATIONS, LATEST REVISION.
28. THE CONTRACTOR SHALL NOTIFY THE PUBLIC UTILITY COMPANIES AND DETERMINE THE LOCATION OF ALL EXISTING UNDERGROUND UTILITIES PRIOR TO PROCEEDING WITH THE EXCAVATION. ALL WORK PERFORMED IN THE AREA OF THE PUBLIC UTILITIES SHALL BE PERFORMED ACCORDING TO THE REQUIREMENTS OF THESE AGENCIES.
29. COMPACTION OF ALL TRENCHES MUST BE ATTAINED IN ACCORDANCE WITH THE SOILS REPORTS AND COMPACTION TEST RESULTS SUBMITTED TO THE DISTRICT ENGINEER PRIOR TO PROBATIONARY ACCEPTANCE.
30. AT LEAST FIVE (5) DAYS PRIOR TO THE START OF CONSTRUCTION, A PRE-CONSTRUCTION MEETING WILL BE HELD AT THE OFFICE OF THE DISTRICT ENGINEER AND ATTENDED BY THE CONTRACTOR, DESIGN ENGINEER, AND REPRESENTATIVE OF OTHER APPROVING AGENCIES.
31. CHLORINATION AND FLUSHING: ALL WATER MAINS SHALL BE INSTALLED AND CHLORINATED PER PWSD SPECIFICATIONS. CHLORINATION OF FINISHED PIPELINE COMPLETED BEFORE HYDROSTATIC TESTING.
32. HYDROSTATIC TESTING: ALL WATER MAINS SHALL BE TESTED PER THE REQUIREMENTS OF THE PWSD SPECIFICATIONS UP TO MINIMUM OF 150 PSI IN THE PRESENCE OF A PWSD INSPECTOR/ENGINEER.

PARKER WATER AND SANITATION DISTRICT
SANITARY SEWER SYSTEM NOTES

1. ALL MATERIALS AND WORKMANSHIP SHALL BE IN CONFORMANCE WITH THE PWSD ENGINEERING STANDARDS AND SPECIFICATIONS, LATEST VERSION.
2. ALL SEWER MAINS SHALL BE PVC, ASTM D-3034, SDR 35 OR APPROVED EQUAL. ALL SEWER MAIN SIZE IS 8" IN DIAMETER UNLESS OTHERWISE NOTED.
3. SEWER LINES SHALL BE INSTALLED 5.0 FEET SOUTH OR WEST OF STREET CENTERLINE. UNLESS OTHERWISE SHOWN ON PLANS. SEWER LINES SHALL BE 10.00 FEET FROM WATER LINES EXCEPT WHEN CROSSING EACH OTHER. SEWER LINES WHICH CROSS LESS THAN 1.50 FEET VERTICALLY FROM THE WATER MAIN SHALL BE ENCASED IN CONCRETE AS PER PWSD SPECIFICATIONS. USE RUBBER GASKETS FOR PVC ENCASEMENT.
4. SEWER RIM ELEVATIONS SHOWN ARE APPROPRIATE ONLY AND ARE NOT TO BE TAKEN AS FINAL ELEVATIONS. RING AND COVER SHALL BE SET IN CENTERED CONCRETE RINGS WITH RAM-NECK FOR ADJUSTMENT TO MATCH FINAL PAVEMENT ELEVATIONS.
5. THE CONTRACTOR AND SURVEY CREW SHALL VERIFY ELEVATIONS OF EXISTING SEWER LINES AND MANHOLES TO BE TIED TO PRIOR TO CONSTRUCTION OR STAKING OF SANITARY SEWER.
6. NO UNDERDRAIN SYSTEM WILL BE ALLOWED TO BE PLACED IN MAINLINE OR SEWER SERVICE TRENCHES.
7. SEWER SERVICE TEES FOR EACH UNIT SHALL BE STAKED BY A SURVEY CREW AND FURNISHED AND INSTALLED BY THE CONTRACTOR. THE CONTRACTOR SHALL FURNISH TO THE ENGINEER "AS CONSTRUCTED" LOCATION OF TEES. SEWER WYES SHALL BE USED RATHER THAN TEES.
8. ALL MANHOLES SHALL BE 48-INCHES IN DIAMETER WITH 24-INCH RING AND COVER, ECCENTRIC CONE UNLESS OTHERWISE SPECIFIED. ALL MANHOLES SHALL HAVE SHAPED INVERTS.
9. PIPE BEDDING SHALL BE CLASS "B" AND SHALL CONFORM TO ASTM C-33 OR D-448 GRADATION NO. 6 OR NO. 67.
10. AT LEAST FIVE (5) DAYS PRIOR TO THE START OF CONSTRUCTION, A PRE-CONSTRUCTION MEETING WILL BE HELD AT THE OFFICE OF THE DISTRICT ENGINEER AND ATTENDED BY THE CONTRACTOR AND REPRESENTATIVES OF THE OTHER APPROVING AGENCIES. IT WILL BE THE RESPONSIBILITY OF THE CONTRACTOR TO CONTACT THE DISTRICT ENGINEER TO SCHEDULE THIS MEETING.
11. THE CONTRACTOR SHALL HAVE IN HIS POSSESSION AT ALL TIMES ONE (1) SIGNED COPY OF THE PLANS WHICH HAVE BEEN APPROVED BY THE PWSD AND THE DISTRICT ENGINEER AND ONE (1) COPY OF THE LATEST PWSD SPECIFICATION MANUAL.
12. ALL SEWER LINES SHALL BE TESTED IN ACCORDANCE WITH THE PWSD STANDARDS AND SPECIFICATIONS PRIOR TO ACCEPTANCE OR ANY CONNECTION TO AN EXISTING SEWER LINE.
13. PRIOR TO STARTING WORK WHERE SEWER MAIN IS TO BE CONNECTED TO EXISTING PWSD SEWER SYSTEMS. THE NEAREST MANHOLE TO THE POINT OF TIE-IN SHALL BE PLUGGED WITH A PLUMBER'S PLUG ON THE INLET SIDE BY THE CONTRACTOR. THIS PLUG SHALL REMAIN IN PLACE UNTIL FINAL PROBATIONARY ACCEPTANCE BY PWSD. THE CONTRACTOR SHALL BE RESPONSIBLE FOR PUMPING AND CLEANING THESE MANHOLES AND REMOVING THE PLUG WHEN INSTRUCTED BY THE DISTRICT.
14. PRIOR TO PROBATIONARY ACCEPTANCE WALK-THROUGH, THE CONTRACTOR SHALL JET CLEAN THE ENTIRE SANITARY SEWER SYSTEM AND PUMP OUT AT THE PLUGGED MANHOLE.

LEGEND

- PROPERTY LINE
- LOT LINE
- PROPOSED EASEMENT / SETBACK
- EXISTING RIGHT-OF-WAY
- PROPOSED SAWCUT LINE
- PROPOSED CURB
- PROPOSED FLOW LINE
- PROPOSED PAN/LIP
- PROPOSED SANITARY SEWER
- EXISTING SANITARY SEWER
- PROPOSED WATERLINE
- EXISTING WATERLINE
- PROPOSED STORM SEWER
- EXISTING STORM SEWER
- PROPOSED WATERLINE BEND *
- PROPOSED WATERLINE TEE / CROSS *
- PROPOSED WATERLINE PLUG & CAP *
- PROPOSED GATE VALVE *
- PROPOSED WATER METER *
- PROPOSED FIRE HYDRANT *
- EXISTING / PROPOSED SANITARY MANHOLE *
- EXISTING / PROPOSED CLEAN OUT *
- UNDERGROUND UTILITY CROSSING

ABBREVIATIONS

ASSY	ASSEMBLY
BP	BOTTOM OF PIPE
ESMT	EASEMENT
ELEV	ELEVATION
EX	EXISTING
DIP	DUCTILE IRON PIPE
FG	FINISHED GRADE
FH	FIRE HYDRANT
FL	FLOWLINE
FU	FUTURE
GV	GATE VALVE
INV	INVERT
KB	KICK BLOCK / THRUST BLOCK
PR	PROPOSED
PVC	POLYVINYL CHLORIDE PIPE
TP	TOP OF PIPE
W/	WITH

PERCEPTION DESIGN GROUP, INC.
6901 SOUTH PIERCE STREET, SUITE 315, LITTLETON, CO 80128 303-232-8868
WWW.PERCEPTIONDESIGNGROUP.COM

PREPARED UNDER THE DIRECT SUPERVISION OF
JERRY W. DAVIDSON, P.E.
COLORADO REG # 30226
FOR AND ON BEHALF OF
PERCEPTION DESIGN GROUP, INC.

	DATE	DESCRIPTION
4	08/31/18	FOURTH SUBMITTAL
3	05/25/18	THIRD SUBMITTAL
2	03/19/18	PWSD SUBMITTAL
1	02/26/18	SECOND SUBMITTAL
0	10/24/17	INITIAL SUBMITTAL

REVISIONS

WATER AND SANITARY NOTES

PARKER POINTE
LOTS 1 THRU 15 AND TRACTS A AND B, PARKER POINTE FILING NO. 1
SOUTHEAST CORNER PARKER ROAD AND STROH ROAD
PARKER, COLORADO

design by:	JWD
approved by:	JWD
project no.:	2015-015
date:	10/01/17

SHEET
C7.01

\\PDG-NAS\PUBLIC\PROJECTS\2015-015 PARKER AND STROH\DWG\WATER AND SANITARY PLANS\2015-015 CDS - CVR & NOTES.DWG 8/31/2018 6:43 PM

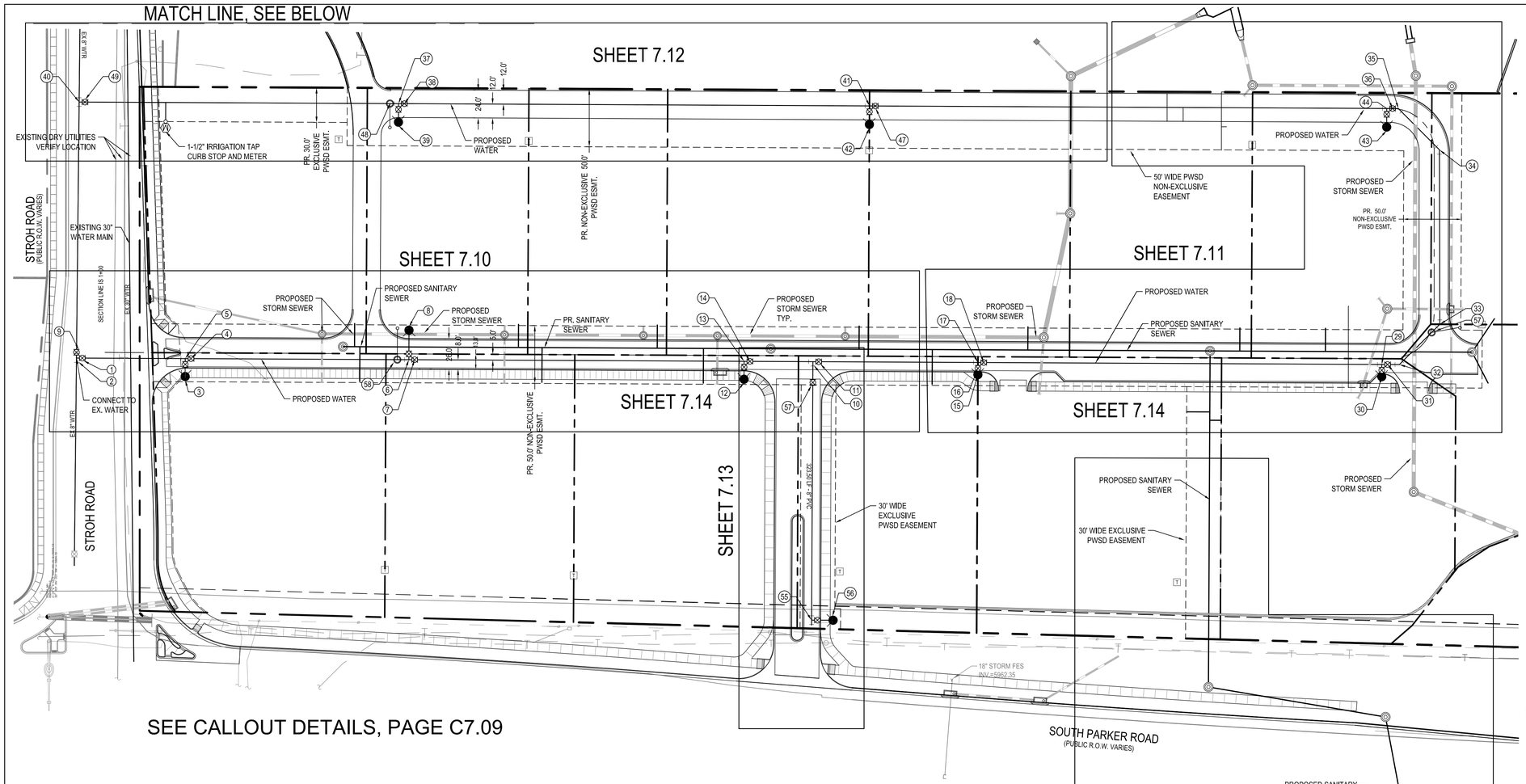

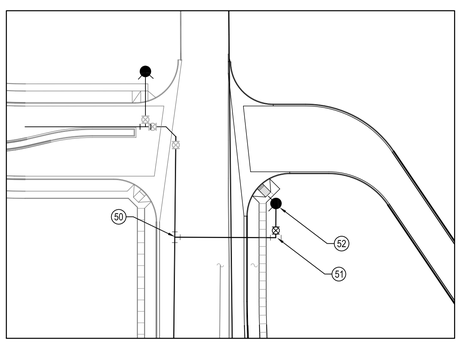

MATCH LINE, SEE ABOVE

TOWN NOTE

THE PROPOSED UTILITY CONNECTION WILL REQUIRE A TOWN RIGHT-OF-WAY PERMIT PRIOR TO COMMENCING WORK. THE TOWN PREFERS CONNECTIONS TO BE BORED TO THE EXTENT POSSIBLE, AND ANY STREET CUT ALLOWED BY THE TOWN WILL BE REQUIRED TO BE PATCHED ACCORDING TO THE TOWN'S CONSTRUCTION STANDARDS AND DETAILS. THE LIMITS OF PATCHING WILL BE DETERMINED BY THE TOWN AT THE TIME OF CONSTRUCTION. THE TOWN OF PARKER DOES NOT ALLOW ROADWAY CLOSURES FOR UTILITY WORK.

ALL FIRE HYDRANTS SHALL BE INSTALLED ACCORDING TO WATER UTILITY STANDARDS. THE NUMBER AND LOCATION OF THE FIRE HYDRANTS AS SHOWN ON THE OVERALL UTILITY PLAN ARE CORRECT AS SPECIFIED BY THE TOWN OF PARKER, COMMUNITY DEVELOPMENT DEPARTMENT.

FIRE CODE OFFICIAL OR DESIGNATED REPRESENTATIVE DATE

(NOTE - UNDERGROUND FIRE LINE (UFL) SUBMITTAL DOCUMENTS MUST MEET THE REQUIREMENTS OF NFPA 24 WHEN SUBMITTING FOR REVIEW.)

THE TOWN OF PARKER REVIEW CONSTITUTES GENERAL COMPLIANCE WITH THE TOWN'S STANDARDS AND APPROVED VARIANCES, SUBJECT TO THESE PLANS BEING STAMPED, SIGNED, AND DATED BY THE PROFESSIONAL ENGINEER OF RECORD. REVIEW BY THE TOWN DOES NOT CONSTITUTE APPROVAL OF THE PLAN DESIGN OR ACCURACY AND CORRECTNESS OF ENGINEERING CALCULATIONS. ERRORS IN THE DESIGN OR CALCULATIONS REMAIN THE RESPONSIBILITY OF THE REGISTERED PROFESSIONAL ENGINEER WHOSE STAMP AND SIGNATURE ARE AFFIXED TO THIS DOCUMENT.

THIS REVIEW DOES NOT CONSTITUTE APPROVAL OF ANY PRIVATE ON-SITE IMPROVEMENTS WHICH MAY BE SHOWN. CONSTRUCTION CANNOT COMMENCE UNTIL ALL REQUIRED DRAINAGE/TRAFFIC REPORT(S), FINAL DEVELOPMENT PLAN(S), SPECIAL REVIEW(S), GRADING PERMIT, AND/OR OTHER PERMITS ARE COMPLETE, APPROVED AND ON FILE WITH THE TOWN OF PARKER

TOWN OF PARKER, DIRECTOR OF ENGINEERING DATE

CALL UTILITY NOTIFICATION CENTER OF COLORADO
1-800-922-1987
CALL 2-BUSINESS DAYS IN ADVANCE BEFORE YOU DIG, GRADE, OR EXCAVATE FOR THE MARKING OF UNDERGROUND MEMBER UTILITIES.

CAUTION: NOTICE TO CONTRACTOR THE CONTRACTOR IS SPECIFICALLY CAUTIONED THAT THE LOCATION AND/OR ELEVATION OF EXISTING UTILITIES AS SHOWN ON THESE PLANS IS BASED ON RECORDS OF THE VARIOUS UTILITY COMPANIES AND, WHERE POSSIBLE, MEASUREMENTS TAKEN IN THE FIELD. THE INFORMATION IS NOT TO BE RELIED ON AS BEING EXACT OR COMPLETE. THE CONTRACTOR MUST CALL THE LOCAL UTILITY LOCATION CENTER AT LEAST 48 HOURS BEFORE ANY EXCAVATION TO REQUEST EXACT FIELD LOCATIONS OF THE UTILITIES. IT SHALL BE THE RESPONSIBILITY OF THE CONTRACTOR TO RELOCATE ALL EXISTING UTILITIES WHICH CONFLICT WITH THE PROPOSED IMPROVEMENTS SHOWN ON THE PLANS.

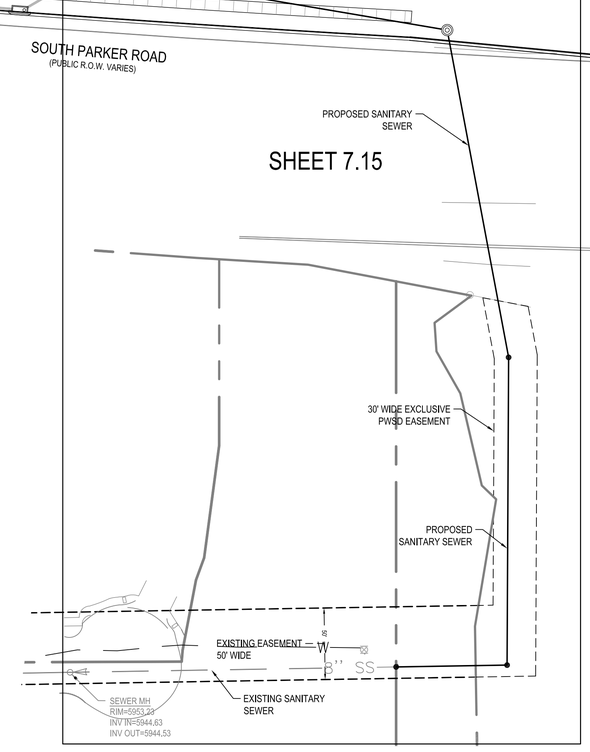

LEGEND

- PROPERTY LINE
- LOT LINE
- PROPOSED EASEMENT / SETBACK
- EXISTING RIGHT-OF-WAY
- PROPOSED SAWCUT LINE
- PROPOSED CURB / PROPOSED FLOW LINE / PROPOSED PAN/LIP
- PROPOSED SANITARY SEWER
- EXISTING SANITARY SEWER
- PROPOSED WATERLINE
- EXISTING WATERLINE
- PROPOSED STORM SEWER
- EXISTING STORM SEWER
- PROPOSED WATERLINE BEND *
- PROPOSED WATERLINE TEE / CROSS *
- PROPOSED WATERLINE PLUG & CAP *
- PROPOSED GATE VALVE *
- PROPOSED WATER METER *
- PROPOSED FIRE HYDRANT *
- EXISTING / PROPOSED SANITARY MANHOLE *
- EXISTING / PROPOSED CLEAN OUT *
- UNDERGROUND UTILITY CROSSING

ABBREVIATIONS

ASSY	ASSEMBLY
BP	BOTTOM OF PIPE
ESMT	EASEMENTPS
ELEV	ELEVATION
EX	EXISTING
DIP	DUCTILE IRON PIPE
FG	FINISHED GRADE
FH	FIRE HYDRANT
FL	FLOWLINE
FU	FUTURE
GV	GATE VALVE
INV	INVERT
KB	KICK BLOCK / THRUST BLOCK
PR	PROPOSED
PVC	POLYVINYL CHLORIDE PIPE
TP	TOP OF PIPE
W/	WITH

UTILITY NOTES

1. ALL UTILITY CONSTRUCTION SHALL CONFORM TO PARKER WATER AND SANITATION DISTRICT AND CRITERIA REFERENCE. LOCAL AGENCY INFRASTRUCTURE DESIGN AND CONSTRUCTION STANDARDS.
2. NOMINAL DEPTH OF WATER MAIN SHALL BE 4.5' FROM FINISHED GRADE TO TOP OF PIPE.
3. ALL MATERIALS AND WORKMANSHIP SHALL BE SUBJECT TO INSPECTION BY THE PARKER WATER AND SANITATION DISTRICT THE DISTRICT RESERVES THE RIGHT TO ACCEPT OR REJECT ANY SUCH MATERIALS AND WORKMANSHIP THAT DOES NOT CONFORM TO ITS STANDARDS AND SPECIFICATIONS.
4. THE CONTRACTOR IS RESPONSIBLE FOR LOCATING THE HORIZONTAL AND VERTICAL LOCATION OF ALL EXISTING UTILITIES. EXISTING UTILITIES SHOWN ON THIS PLANS ARE BASED ON THE BEST AVAILABLE INFORMATION AT THE TIME OF DESIGN AND DO NOT REFLECT A COMPLETE SURVEY OF EXISTING UTILITIES. CONTACT THE ENGINEER WITH DISCREPANCIES.
5. SAWCUT OF EXISTING STREETS SHALL BE IN CONFORMANCE WITH TOWN STANDARDS. CUTS SHALL STRAIGHT WITH CLEAN EDGES. REMOVE EXISTING CURB AND GUTTER TO NEAREST JOINT RETURN ALONG EXISTING LINE AND GRADE.
6. THE OWNER AND OR THEIR REPRESENTATIVE SHALL BE RESPONSIBLE FOR COORDINATION WITH EXISTING FRANCHISE UTILITIES TO INCLUDE COMCAST, XCEL, CENTURY LINK OR OWNERS OF EXISTING DRY UTILITY LINES.
7. EXISTING UTILITY SURFACE APPURTENANCES SHALL BE RAISED TO FINISHED GRADE, THIS INCLUDES BUT IS NOT LIMITED TO MANHOLE LIDS, VALVE COVERS.

GRAPHIC SCALE
-50 0 25 50 100
(IN FEET)
1 inch = 50ft.

BENCHMARK

BENCHMARK: DOUGLAS COUNTY SURVEY CONTROL MONUMENT TT15A – 3" DIAMETER DOUGLAS COUNTY GIS ALUMINUM CAP AT THE NE CORNER OF STROH ROAD AND SOUTH PARKER ROAD (US HIGHWAY 83) ELEVATION: 5970.79 FEET (NAVD 1988 DATUM)

PERCEPTION DESIGN GROUP, INC.
6901 SOUTH PIERCE STREET, SUITE 315, LITTLETON, CO 80128 303-232-8868
WWW.PERCEPTIONDESIGNGROUP.COM

PREPARED UNDER THE DIRECT SUPERVISION OF JERRY W. DAVIDSON, P.E. COLORADO REG # 30226 FOR AND ON BEHALF OF PERCEPTION DESIGN GROUP, INC.

DATE	DESCRIPTION
08/31/18	FOURTH SUBMITTAL
05/25/18	THIRD SUBMITTAL
03/19/18	PWSD SUBMITTAL
02/28/18	SECOND SUBMITTAL
10/24/17	INITIAL SUBMITTAL

REVISIONS

OVERALL UTILITY PLAN

PARKER POINTE
LOTS 1 THRU 15 AND TRACTS A AND B, PARKER POINTE FILING NO. 1
SOUTHEAST CORNER PARKER ROAD AND STROH ROAD
PARKER, COLORADO

design by:	JWD
approved by:	JWD
project no.:	2015-015
date:	10/01/17

SHEET
C7.08

\\PDG-NAS\PUBLIC\PROJECTS\2015-015 PARKER AND STROH\DWG\WATER AND SANITARY PLANS\2015-015 CDS - OVERALL UTIL PLAN.DWG 8/31/2018 4:05 PM

WATER ITEMS ON SHEET C7.10

#	ITEM	STA.	OS (FT.)
1	PR. 8" G.V.	0+75.41	5.00 R
2	PR. 8"X8" TEE	0+75.41	5.00 R
3	PR. 6" G.V. / 23.5 LF 6" DIP / 6" HYDRANT ASSY.	1+69.45	23.50 R
4	PR. 8" G.V.	1+74.45	5.00 R
5	PR. 8"X6" TEE W/ KB	1+69.45	5.00 R
6	PR. 8"X6" TEE W/ KB	3+62.74	5.00 R
7	PR. 8" G.V.	3+67.74	5.00 R
8	PR. 6" G.V. / 28.5 LF 6" DIP / 6" HYDRANT ASSY.	3+62.74	23.50 L
9	PR. 8" G.V.	0+75.41	0.000
10	PR. 8"X8" TEE	7+12.05	5.00 R
11	PR. 8" G.V.	7+17.05	5.00 R
12	PR. 6" G.V. / 18.5 LF 6" DIP / 6" HYDRANT ASSY.	6+52.55	23.50 R
13	PR. 8"X6" TEE W/ KB	6+52.55	5.00 R
14	PR. 8" G.V.	6+57.55	5.00 R
15	PR. 10.5 LF 6" DIP / 6" HYDRANT ASSY.	8+54.72	15.50 R
16	PR. 6" G.V.	8+54.72	10.00 R
17	PR. 8"X6" TEE W/ KB	8+54.72	5.00 R
18	PR. 8" G.V.	8+59.72	5.00 R
25	PR. L.P. BLOW-OFF VALVE	1+23.94	0.00
58	PR. AIR RELEASE VALVE	3+52.74	0.00

WATER ITEMS ON SHEET C7.11

#	ITEM	STA.	OS (FT.)
27	PR. L.P. BLOW-OFF VALVE	11+94.30	0.000
28	PR. L.P. BLOW-OFF VALVE	12+76.56	0.000
29	PR. 8"X6" TEE W/ KB	12+03.83	5.00 R
30	PR. 6" G.V. / 10.5 LF 6" DIP / 6" HYDRANT ASSY.	12+03.83	15.50 R
31	PR. 8" G.V.	12+08.83	5.00 R
32	PR. 8" 45° BEND W/ KB	12+17.98	5.78 R
33	PR. 8" 45° BEND W/ KB	12+63.51	5.78 R
34	PR. 8" 45° BEND W/ KB	14+13.15	4.57 R
35	PR. 8" 45° BEND W/ KB	14+64.21	0.45 R
36	PR. 8" G.V.	14+69.18	0.00
43	PR. 6" G.V. / 19.0 LF 6" DIP / 6" HYDRANT ASSY.	14+74.19	19.00 L
44	PR. 8"X6" TEE W/ KB	14+74.19	0.00
57	PR. AIR RELEASE VALVE	12+53.51	0.00

WATER ITEMS ON SHEET C7.12

#	ITEM	STA.	OS (FT.)
24	PR. L.P. BLOW OFF	0+22.02	0.00
37	PR. 8"X6" TEE W/ KB	23+28.49	0.00
38	PR. 8" G.V.	23+23.49	0.00
39	PR. 6" G.V. / 19.0 LF 6" DIP / 6" HYDRANT ASSY	23+28.49	19.00 L
40	PR. 8"X8" TEE W/ KB	26+04.57	0.00
41	PR. 8"X6" TEE W/ KB	19+21.36	0.00
42	PR. 6" G.V. / 19.0 LF 6" DIP / 6" HYDRANT ASSY	19+21.36	19.00 L
45	PR. L.P. BLOW OFF	25+64.19	0.00
47	PR. 8" G.V.	19+16.36	0.00
48	PR. 8" AIRVAC VALVE	23+35.90	0.00
49	PR. 8" G.V.	25+99.57	0.00
50	PR. 8"X8" TEE W/ KB	0+59.61	0.00
51	PR. 8"X6" TEE W/ KB	-0+10.56	0.00
52	PR. 6" G.V. / 23.94 LF 6" DIP / 6" HYDRANT ASSY.	-0+10.56	23.94 R

WATER ITEMS ON SHEET C7.13

#	ITEM	STA.	OS (FT.)
53	8"X8" TEE W/ KB	0+00.00	0.00
55	8"X6" TEE W/ KB	3+23.50	0.00
56	PR. 6" HYDRANT ASSY. / 18.50LF 6" DIP / 6" G.V.	3+23.50	18.50 L
57	PR. 8" G.V.	1+18.00	0.00

LEGEND

- PROPERTY LINE
- LOT LINE
- PROPOSED EASEMENT / SETBACK
- EXISTING RIGHT-OF-WAY
- PROPOSED SAWCUT LINE
- PROPOSED CURB
- PROPOSED FLOW LINE
- PROPOSED PAN/LIP
- SS — PROPOSED SANITARY SEWER
- ss — EXISTING SANITARY SEWER
- W — PROPOSED WATERLINE
- w — EXISTING WATERLINE
- PROPOSED STORM SEWER
- st — EXISTING STORM SEWER
- PROPOSED WATERLINE BEND *
- PROPOSED WATERLINE TEE / CROSS *
- PROPOSED WATERLINE PLUG & CAP *
- PROPOSED GATE VALVE *
- PROPOSED WATER METER *
- PROPOSED FIRE HYDRANT *
- S — EXISTING / PROPOSED SANITARY MANHOLE *
- CO — EXISTING / PROPOSED CLEAN OUT *
- UNDERGROUND UTILITY CROSSING

ABBREVIATIONS

ASSY	ASSEMBLY
BP	BOTTOM OF PIPE
ESMT	EASEMENTPS
ELEV	ELEVATION
EX	EXISTING
DIP	DUCTILE IRON PIPE
FG	FINISHED GRADE
FH	FIRE HYDRANT
FL	FLOWLINE
FU	FUTURE
GV	GATE VALVE
INV	INVERT
KB	KICK BLOCK / THRUST BLOCK
PR	PROPOSED
PVC	POLYVINYL CHLORIDE PIPE
TP	TOP OF PIPE
W/	WITH

UTILITY NOTES

1. ALL UTILITY CONSTRUCTION SHALL CONFORM TO PARKER WATER AND SANITATION DISTRICT AND CRITERIA REFERENCE. LOCAL AGENCY INFRASTRUCTURE DESIGN AND CONSTRUCTION STANDARDS.
2. NOMINAL DEPTH OF WATER MAIN SHALL BE 4.5' FROM FINISHED GRADE TO TOP OF PIPE.
3. ALL MATERIALS AND WORKMANSHIP SHALL BE SUBJECT TO INSPECTION BY THE PARKER WATER AND SANITATION DISTRICT THE DISTRICT RESERVES THE RIGHT TO ACCEPT OR REJECT ANY SUCH MATERIALS AND WORKMANSHIP THAT DOES NOT CONFORM TO ITS STANDARDS AND SPECIFICATIONS.
4. THE CONTRACTOR IS RESPONSIBLE FOR LOCATING THE HORIZONTAL AND VERTICAL LOCATION OF ALL EXISTING UTILITIES. EXISTING UTILITIES SHOWN ON THIS PLANS ARE BASED ON THE BEST AVAILABLE INFORMATION AT THE TIME OF DESIGN AND DO NOT REFLECT A COMPLETE SURVEY OF EXISTING UTILITIES. CONTACT THE ENGINEER WITH DISCREPANCIES.
5. SAWCUT OF EXISTING STREETS SHALL BE IN CONFORMANCE WITH TOWN STANDARDS. CUTS SHALL STRAIGHT WITH CLEAN EDGES. REMOVE EXISTING CURB AND GUTTER TO NEAREST JOINT RETURN ALONG EXISTING LINE AND GRADE.
6. THE OWNER AND OR THEIR REPRESENTATIVE SHALL BE RESPONSIBLE FOR COORDINATION WITH EXISTING FRANCHISE UTILITIES TO INCLUDE COMCAST, XCEL, CENTURY LINK OR OWNERS OF EXISTING DRY UTILITY LINES.
7. EXISTING UTILITY SURFACE APPURTENANCES SHALL BE RAISED TO FINISHED GRADE, THIS INCLUDES BUT IS NOT LIMITED TO MANHOLE LIDS, VALVE COVERS.

ALL FIRE HYDRANTS SHALL BE INSTALLED ACCORDING TO WATER UTILITY STANDARDS. THE NUMBER AND LOCATION OF THE FIRE HYDRANTS AS SHOWN ON THE OVERALL UTILITY PLAN ARE CORRECT AS SPECIFIED BY THE TOWN OF PARKER, COMMUNITY DEVELOPMENT DEPARTMENT.

FIRE CODE OFFICIAL OR DESIGNATED REPRESENTATIVE DATE

(NOTE - UNDERGROUND FIRE LINE (UFL) SUBMITTAL DOCUMENTS MUST MEET THE REQUIREMENTS OF NFPA 24 WHEN SUBMITTING FOR REVIEW.)

THE TOWN OF PARKER REVIEW CONSTITUTES GENERAL COMPLIANCE WITH THE TOWN'S STANDARDS AND APPROVED VARIANCES, SUBJECT TO THESE PLANS BEING STAMPED, SIGNED, AND DATED BY THE PROFESSIONAL ENGINEER OF RECORD. REVIEW BY THE TOWN DOES NOT CONSTITUTE APPROVAL OF THE PLAN DESIGN OR ACCURACY AND CORRECTNESS OF ENGINEERING CALCULATIONS. ERRORS IN THE DESIGN OR CALCULATIONS REMAIN THE RESPONSIBILITY OF THE REGISTERED PROFESSIONAL ENGINEER WHOSE STAMP AND SIGNATURE ARE AFFIXED TO THIS DOCUMENT.

THIS REVIEW DOES NOT CONSTITUTE APPROVAL OF ANY PRIVATE ON-SITE IMPROVEMENTS WHICH MAY BE SHOWN. CONSTRUCTION CANNOT COMMENCE UNTIL ALL REQUIRED DRAINAGE/TRAFFIC REPORT(S), FINAL DEVELOPMENT PLAN(S), SPECIAL REVIEW(S), GRADING PERMIT, AND/OR OTHER PERMITS ARE COMPLETE, APPROVED AND ON FILE WITH THE TOWN OF PARKER

TOWN OF PARKER, DIRECTOR OF ENGINEERING DATE

GRAPHIC SCALE

-50 0 25 50 100

(IN FEET)
1 inch = 50ft.

BENCHMARK

BENCHMARK: DOUGLAS COUNTY SURVEY CONTROL MONUMENT TT15A – 3" DIAMETER DOUGLAS COUNTY GIS ALUMINUM CAP AT THE NE CORNER OF STROH ROAD AND SOUTH PARKER ROAD (US HIGHWAY 83) ELEVATION: 5970.79 FEET (NAVD 1988 DATUM)

CALL UTILITY NOTIFICATION CENTER OF COLORADO
1-800-922-1987
CALL 2-BUSINESS DAYS IN ADVANCE BEFORE YOU DIG, GRADE, OR EXCAVATE FOR THE MARKING OF UNDERGROUND MEMBER UTILITIES.

CAUTION: NOTICE TO CONTRACTOR THE CONTRACTOR IS SPECIFICALLY CAUTIONED THAT THE LOCATION AND/OR ELEVATION OF EXISTING UTILITIES AS SHOWN ON THESE PLANS IS BASED ON RECORDS OF THE VARIOUS UTILITY COMPANIES AND, WHERE POSSIBLE, MEASUREMENTS TAKEN IN THE FIELD. THE INFORMATION IS NOT TO BE RELIED ON AS BEING EXACT OR COMPLETE. THE CONTRACTOR MUST CALL THE LOCAL UTILITY LOCATION CENTER AT LEAST 48 HOURS BEFORE ANY EXCAVATION TO REQUEST EXACT FIELD LOCATIONS OF THE UTILITIES. IT SHALL BE THE RESPONSIBILITY OF THE CONTRACTOR TO RELOCATE ALL EXISTING UTILITIES WHICH CONFLICT WITH THE PROPOSED IMPROVEMENTS SHOWN ON THE PLANS.

TOWN NOTE

THE PROPOSED UTILITY CONNECTION WILL REQUIRE A TOWN RIGHT-OF-WAY PERMIT PRIOR TO COMMENCING WORK. THE TOWN PREFERS CONNECTIONS TO BE BORED TO THE EXTENT POSSIBLE, AND ANY STREET CUT ALLOWED BY THE TOWN WILL BE REQUIRED TO BE PATCHED ACCORDING TO THE TOWN'S CONSTRUCTION STANDARDS AND DETAILS. THE LIMITS OF PATCHING WILL BE DETERMINED BY THE TOWN AT THE TIME OF CONSTRUCTION. THE TOWN OF PARKER DOES NOT ALLOW ROADWAY CLOSURES FOR UTILITY WORK.

PERCEPTION DESIGN GROUP, INC.
6901 SOUTH PIERCE STREET, SUITE 315, LITTLETON, CO 80128 303-232-8868
WWW.PERCEPTIONDESIGNGROUP.COM

PREPARED UNDER THE DIRECT SUPERVISION OF
JERRY W. DAVIDSON, P.E.
COLORADO REG # 30226
FOR AND ON BEHALF OF
PERCEPTION DESIGN GROUP, INC.

DATE	DESCRIPTION
08/31/18	FOURTH SUBMITTAL
05/25/18	THIRD SUBMITTAL
03/19/18	PWSD SUBMITTAL
02/28/18	SECOND SUBMITTAL
10/24/17	INITIAL SUBMITTAL

REVISIONS

OVERALL UTILITY PLAN

PARKER POINTE
LOTS 1 THRU 15 AND TRACTS A AND B, PARKER POINTE FILING NO. 1
SOUTHEAST CORNER PARKER ROAD AND STROH ROAD
PARKER, COLORADO

design by: JWD
approved by: JWD
project no.: 2015-015
date: 10/01/17

SHEET
C7.09

\\PDG-NAS\PUBLIC\PROJECTS\2015-015 PARKER AND STROH\DWG\WATER AND SANITARY PLANS\2015-015 CDS - OVERALL UTIL PLAN.DWG 8/31/2018 4:00 PM

WATER MAINS MAY NOT BE TAPPED FOR A SERVICE LINE UNTIL TAP FEES ARE PAID

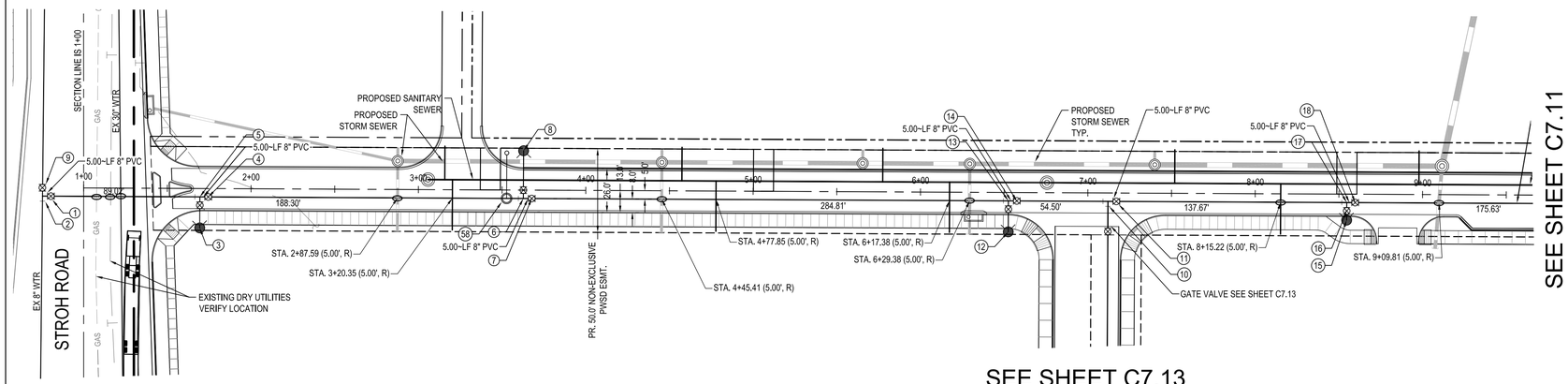

SEE SHEET C7.11

SEE SHEET C7.13

STATIONING IS BASED UPON CENTERLINE OF DRIVEWAY

ITEMS ALONG ALIGNMENT			
#	ITEM	STA.	OS (FT.)
1	PR. 8" G.V.	0+75.41	5.00 R
2	PR. 8"X8" TEE	0+75.41	5.00 R
3	PR. 6" G.V. / 23.5 LF 6" DIP / 6" HYDRANT ASSY.	1+69.45	23.50 R
4	PR. 8" G.V.	1+74.45	5.00 R
5	PR. 8"X6" TEE W/ KB	1+69.45	5.00 R
6	PR. 8"X6" TEE W/ KB	3+62.74	5.00 R
7	PR. 8" G.V.	3+67.74	5.00 R
8	PR. 6" G.V. / 28.5 LF 6" DIP / 6" HYDRANT ASSY.	3+62.74	23.50 L
9	PR. 8" G.V.	0+75.41	0.000
10	PR. 8"X8" TEE	7+12.05	5.00 R
11	PR. 8" G.V.	7+17.05	5.00 R
12	PR. 6" G.V. / 18.5 LF 6" DIP / 6" HYDRANT ASSY.	6+52.55	23.50 R
13	PR. 8"X6" TEE W/ KB	6+52.55	5.00 R
14	PR. 8" G.V.	6+57.55	5.00 R
15	PR. 10.5 LF 6" DIP / 6" HYDRANT ASSY.	8+54.72	15.50 R
16	PR. 6" G.V.	8+54.72	10.00 R
17	PR. 8"X6" TEE W/ KB	8+54.72	5.00 R
18	PR. 8" G.V.	8+59.72	5.00 R
25	PR. L.P. BLOW-OFF VALVE	1+23.94	0.00
58	PR. AIR RELEASE VALVE	3+52.74	0.00

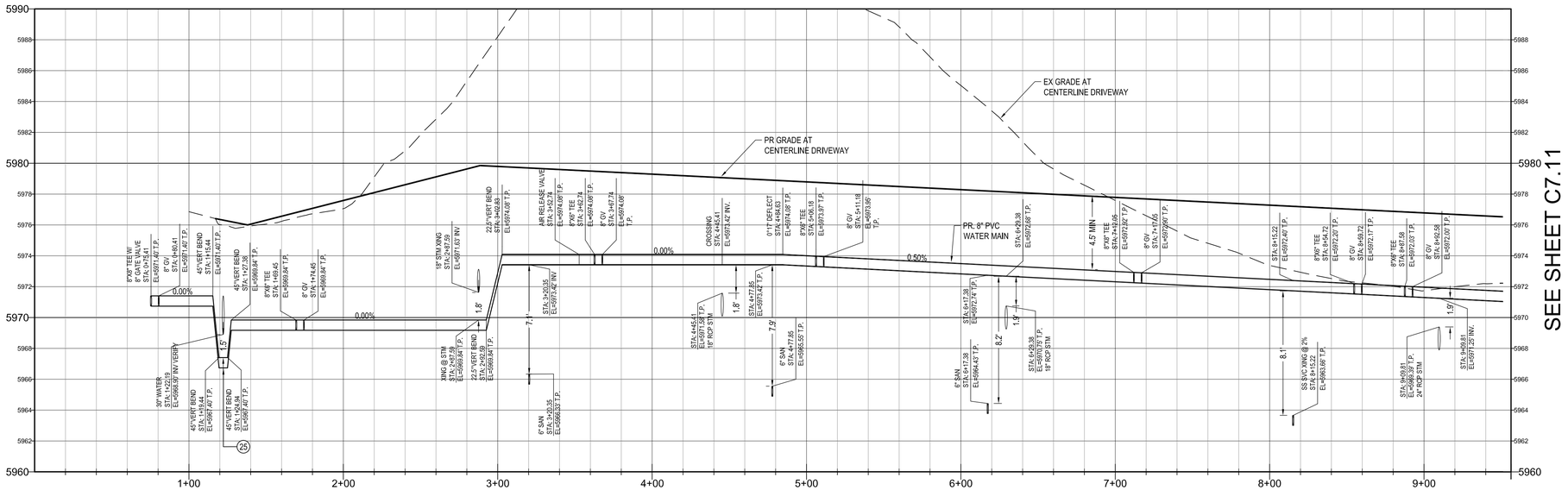

SEE SHEET C7.11

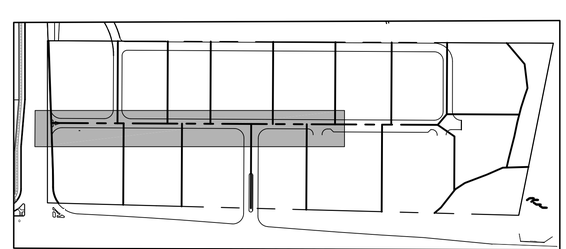

KEY MAP

GRAPHIC SCALE

(IN FEET)
1 inch = 40ft.

BENCHMARK

BENCHMARK: DOUGLAS COUNTY SURVEY CONTROL MONUMENT TT15A – 3" DIAMETER DOUGLAS COUNTY GIS ALUMINUM CAP AT THE NE CORNER OF STROH ROAD AND SOUTH PARKER ROAD (US HIGHWAY 83) ELEVATION: 5970.79 FEET (NAVD 1988 DATUM)

CALL UTILITY NOTIFICATION CENTER OF COLORADO
1-800-922-1987
CALL 2-BUSINESS DAYS IN ADVANCE BEFORE YOU DIG, GRADE, OR EXCAVATE FOR THE MARKING OF UNDERGROUND MEMBER UTILITIES.

CAUTION: NOTICE TO CONTRACTOR THE CONTRACTOR IS SPECIFICALLY CAUTIONED THAT THE LOCATION AND/OR ELEVATION OF EXISTING UTILITIES AS SHOWN ON THESE PLANS IS BASED ON RECORDS OF THE VARIOUS UTILITY COMPANIES AND, WHERE POSSIBLE, MEASUREMENTS TAKEN IN THE FIELD. THE INFORMATION IS NOT TO BE RELIED ON AS BEING EXACT OR COMPLETE. THE CONTRACTOR MUST CALL THE LOCAL UTILITY LOCATION CENTER AT LEAST 48 HOURS BEFORE ANY EXCAVATION TO REQUEST EXACT FIELD LOCATIONS OF THE UTILITIES. IT SHALL BE THE RESPONSIBILITY OF THE CONTRACTOR TO RELOCATE ALL EXISTING UTILITIES WHICH CONFLICT WITH THE PROPOSED IMPROVEMENTS SHOWN ON THE PLANS.

PERCEPTION DESIGN GROUP, INC.
6901 SOUTH PIERCE STREET, SUITE 315, LITTLETON, CO 80128 303-232-8088
WWW.PERCEPTIONDESIGNGROUP.COM

PREPARED UNDER THE DIRECT SUPERVISION OF
JERRY W. DAVIDSON, P.E.
COLORADO REG # 30226
FOR AND ON BEHALF OF
PERCEPTION DESIGN GROUP, INC.

REVISIONS		
4	08/31/18	FOURTH SUBMITTAL
3	05/25/18	THIRD SUBMITTAL
2	03/19/18	PVSD SUBMITTAL
1	02/28/18	SECOND SUBMITTAL
	10/24/17	INITIAL SUBMITTAL
△	DATE	DESCRIPTION

WATER PLAN & PROFILE

PARKER POINTE
LOTS 1 THRU 15 AND TRACTS A AND B, PARKER POINTE FILING NO. 1
SOUTHEAST CORNER PARKER ROAD AND STROH ROAD
PARKER, COLORADO

design by:	JWD
approved by:	JWD
project no.:	2015-015
date:	10/01/17

SHEET
C7.10

\\PDG-NAS\PUBLIC\PROJECTS\2015-015 PARKER AND STROH\DWG\WATER AND SANITARY PLANS\2015-015 CDS -WATER PLAN.DWG 8/31/2018 3:01 PM

WATER MAINS MAY NOT BE TAPPED FOR A SERVICE LINE UNTIL TAP FEES ARE PAID

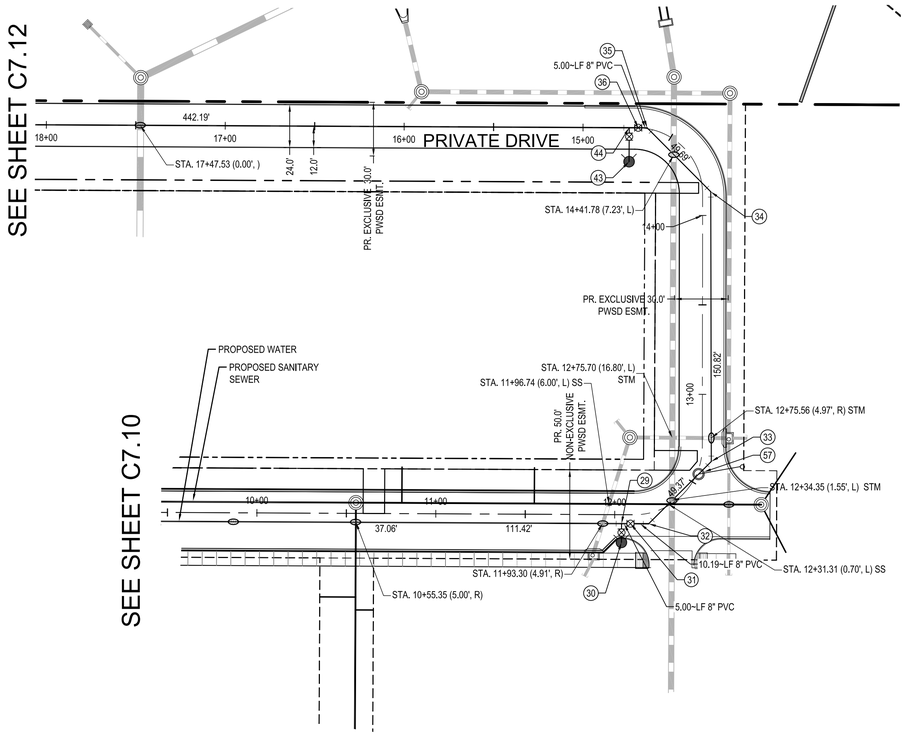

STATIONING IS BASED UPON CENTERLINE OF DRIVEWAY

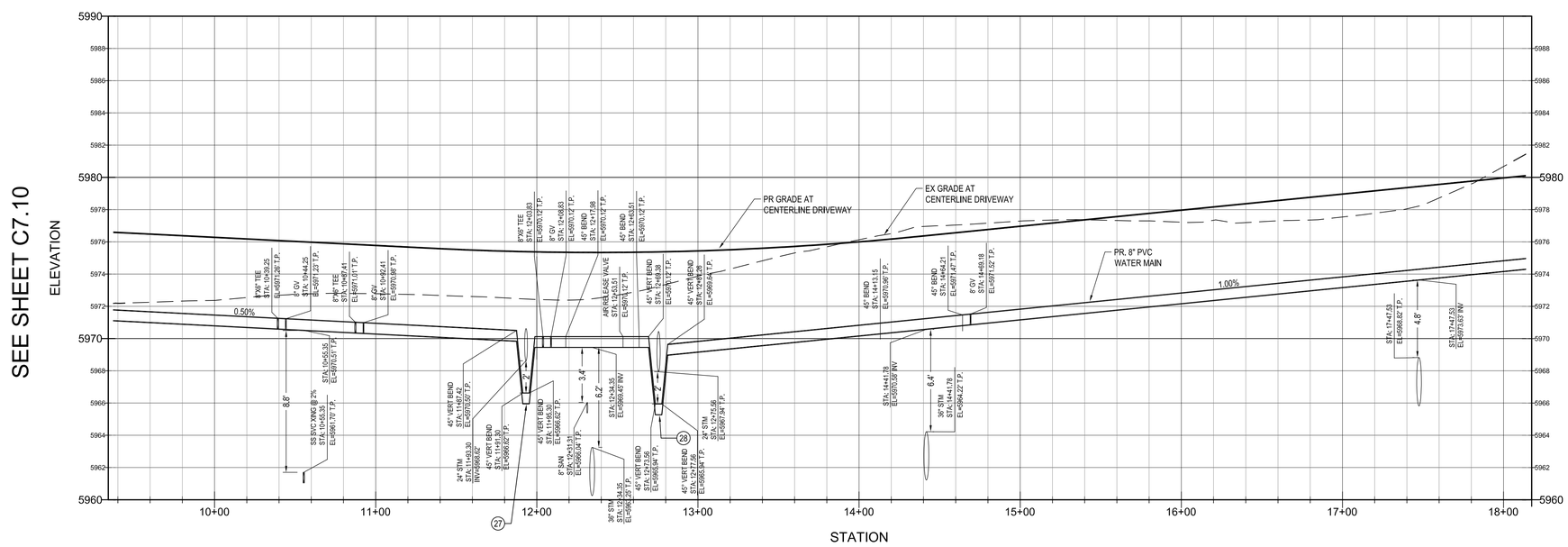

ITEMS ALONG ALIGNMENT			
#	ITEM	STA.	OS (FT.)
27	PR. L.P. BLOW-OFF VALVE	11+94.30	0.000
28	PR. L.P. BLOW-OFF VALVE	12+76.56	0.000
29	PR. 8"X6" TEE W/ KB	12+03.83	5.00 R
30	PR. 6" G.V. / 10.5 LF 6" DIP / 6" HYDRANT ASSY.	12+03.83	15.50 R
31	PR. 8" G.V.	12+08.83	5.00 R
32	PR. 8" 45° BEND W/ KB	12+17.98	5.78 R
33	PR. 8" 45° BEND W/ KB	12+63.51	5.78 R
34	PR. 8" 45° BEND W/ KB	14+13.15	4.57 R
35	PR. 8" 45° BEND W/ KB	14+64.21	0.45 R
36	PR. 8" G.V.	14+69.18	0.00
43	PR. 6" G.V. / 19.0 LF 6" DIP / 6" HYDRANT ASSY.	14+74.19	19.00 L
44	PR. 8"X6" TEE W/ KB	14+74.19	0.00
57	PR. AIR RELEASE VALVE	12+53.51	0.00

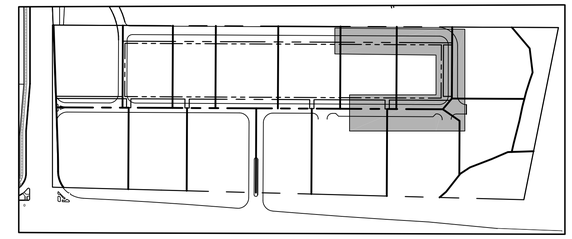

KEY MAP

CALL UTILITY NOTIFICATION CENTER OF COLORADO
1-800-922-1987
CALL 2-BUSINESS DAYS IN ADVANCE BEFORE YOU DIG, GRADE, OR EXCAVATE FOR THE MARKING OF UNDERGROUND MEMBER UTILITIES.

CAUTION: NOTICE TO CONTRACTOR THE CONTRACTOR IS SPECIFICALLY CAUTIONED THAT THE LOCATION AND/OR ELEVATION OF EXISTING UTILITIES AS SHOWN ON THESE PLANS IS BASED ON RECORDS OF THE VARIOUS UTILITY COMPANIES AND, WHERE POSSIBLE, MEASUREMENTS TAKEN IN THE FIELD. THE INFORMATION IS NOT TO BE RELIED ON AS BEING EXACT OR COMPLETE. THE CONTRACTOR MUST CALL THE LOCAL UTILITY LOCATION CENTER AT LEAST 48 HOURS BEFORE ANY EXCAVATION TO REQUEST EXACT FIELD LOCATIONS OF THE UTILITIES. IT SHALL BE THE RESPONSIBILITY OF THE CONTRACTOR TO RELOCATE ALL EXISTING UTILITIES WHICH CONFLICT WITH THE PROPOSED IMPROVEMENTS SHOWN ON THE PLANS.

GRAPHIC SCALE
(IN FEET)
1 Inch = 40 ft.

BENCHMARK

BENCHMARK: DOUGLAS COUNTY SURVEY CONTROL MONUMENT TT15A – 3" DIAMETER DOUGLAS COUNTY GIS ALUMINUM CAP AT THE NE CORNER OF STROH ROAD AND SOUTH PARKER ROAD (US HIGHWAY 83) ELEVATION: 5970.79 FEET (NAVD 1988 DATUM)

PERCEPTION DESIGN GROUP, INC.
6901 SOUTH PIERCE STREET, SUITE 315, LITTLETON, CO 80128 303-232-8088
WWW.PERCEPTIONDESIGNGROUP.COM

PREPARED UNDER THE DIRECT SUPERVISION OF
JERRY W. DAVIDSON, P.E.
COLORADO REG # 30226
FOR AND ON BEHALF OF
PERCEPTION DESIGN GROUP, INC.

REVISIONS		
4	08/31/18	FOURTH SUBMITTAL
3	05/25/18	THIRD SUBMITTAL
2	03/19/18	PWSD SUBMITTAL
1	02/28/18	SECOND SUBMITTAL
	10/24/17	INITIAL SUBMITTAL
△	DATE	DESCRIPTION

WATER PLAN & PROFILE

PARKER POINTE
LOTS 1 THRU 15 AND TRACTS A AND B, PARKER POINTE FILING NO. 1
SOUTHEAST CORNER PARKER ROAD AND STROH ROAD
PARKER, COLORADO

design by: JWD
approved by: JWD
project no.: 2015-015
date: 10/01/17

SHEET
C7.11

\\PDG-NAS\PUBLIC\PROJECTS\2015-015 PARKER AND STROH\DWG\WATER AND SANITARY PLANS\2015-015 CDS -WATER PLAN.DWG 8/31/2018 3:06 PM

WATER MAINS MAY NOT BE TAPPED FOR A SERVICE LINE UNTIL TAP FEES ARE PAID

SEE SHEET C7.11

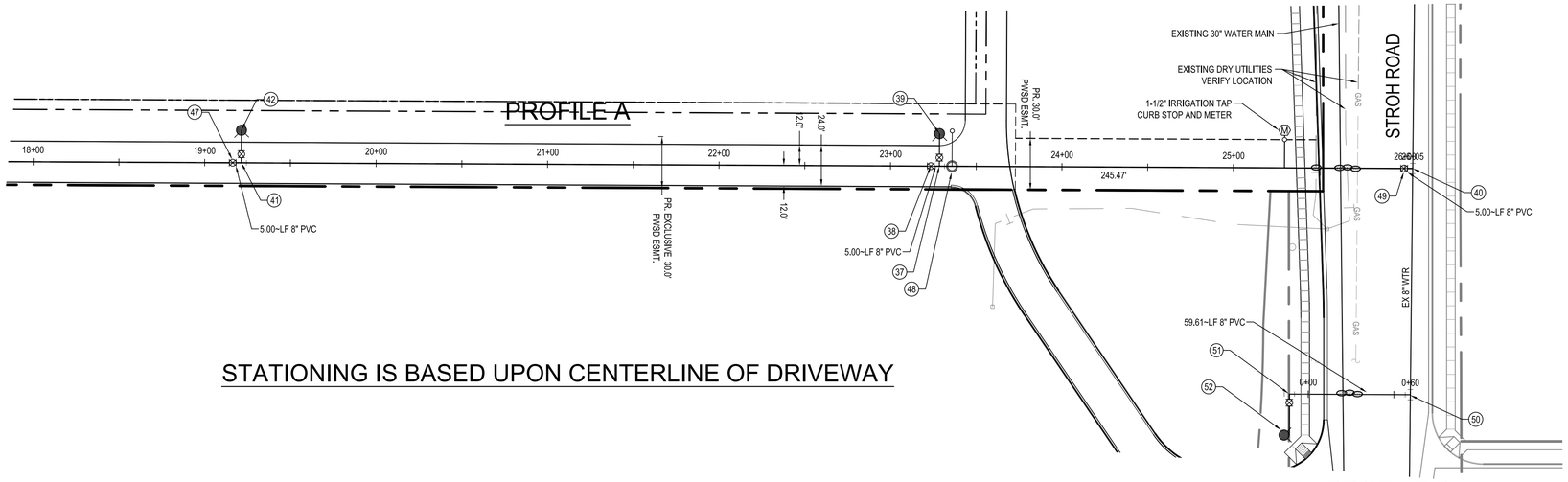

STATIONING IS BASED UPON CENTERLINE OF DRIVEWAY

ITEMS ALONG ALIGNMENT			
#	ITEM	STA.	OS (FT.)
24	PR. L.P. BLOW OFF	0+22.02	0.00
37	PR. 8"X6" TEE W/ KB	23+28.49	0.00
38	PR. 8" G.V.	23+23.49	0.00
39	PR. 6" G.V. / 19.0 LF 6" DIP / 6" HYDRANT ASSY	23+28.49	19.00 L
40	PR. 8"X8" TEE W/ KB	26+04.57	0.00
41	PR. 8"X6" TEE W/ KB	19+21.36	0.00
42	PR. 6" G.V. / 19.0 LF 6" DIP / 6" HYDRANT ASSY	19+21.36	19.00 L
45	PR. L.P. BLOW OFF	25+64.19	0.00
47	PR. 8" G.V.	19+16.36	0.00
48	PR. 8" AIRVAC VALVE	23+35.90	0.00
49	PR. 8" G.V.	25+99.57	0.00
50	PR. 8"X8" TEE W/ KB	0+59.61	0.00
51	PR. 8"X6" TEE W/ KB	-0+10.56	0.00
52	PR. 6" G.V. / 23.94 LF 6" DIP / 6" HYDRANT ASSY.	-0+10.56	23.94 R

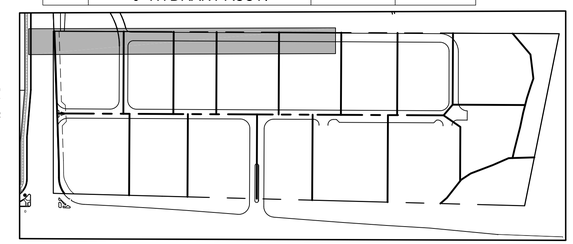

KEY MAP

SEE SHEET C7.11

ELEVATION

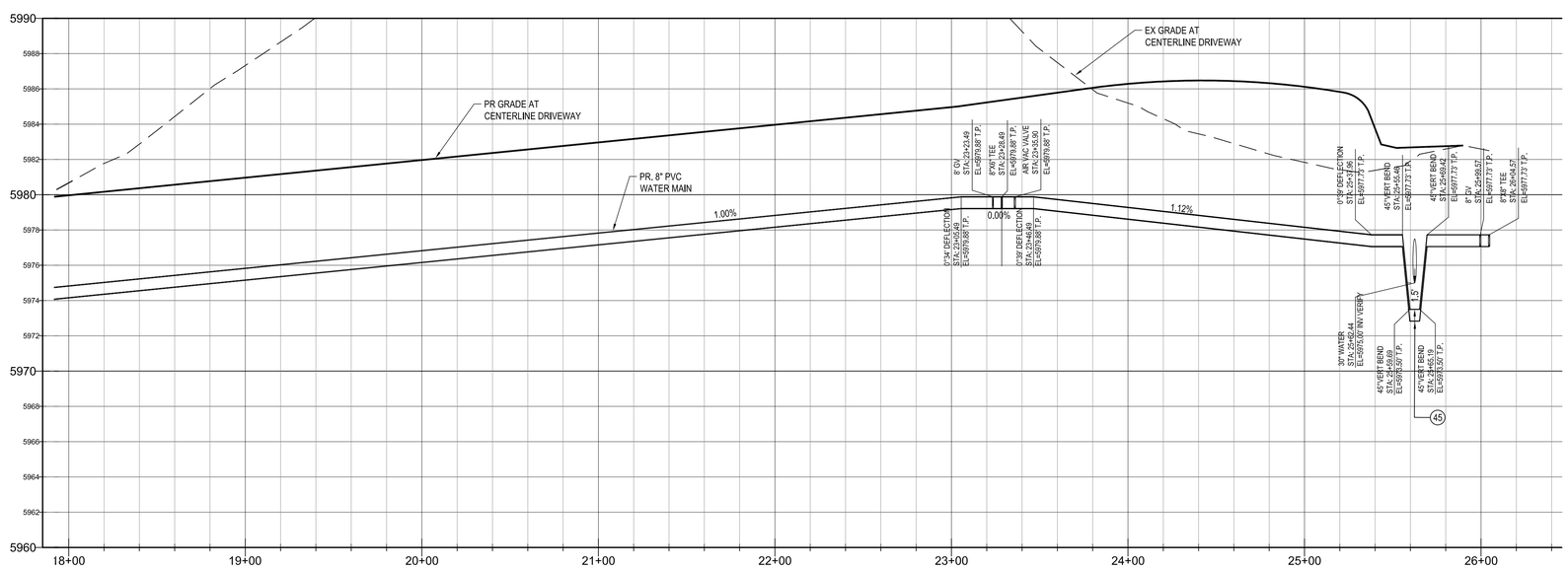

PROFILE A

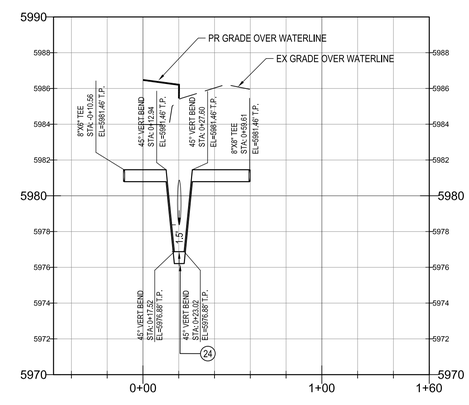

STATION

PROFILE B

GRAPHIC SCALE

(IN FEET)
1 inch = 40ft.

BENCHMARK

BENCHMARK: DOUGLAS COUNTY SURVEY CONTROL MONUMENT TT15A – 3" DIAMETER DOUGLAS COUNTY GIS ALUMINUM CAP AT THE NE CORNER OF STROH ROAD AND SOUTH PARKER ROAD (US HIGHWAY 83) ELEVATION: 5970.79 FEET (NAVD 1988 DATUM)

CALL UTILITY NOTIFICATION CENTER OF COLORADO
1-800-922-1987
CALL 2-BUSINESS DAYS IN ADVANCE BEFORE YOU DIG, GRADE, OR EXCAVATE FOR THE MARKING OF UNDERGROUND MEMBER UTILITIES.

CAUTION: NOTICE TO CONTRACTOR THE CONTRACTOR IS SPECIFICALLY CAUTIONED THAT THE LOCATION AND/OR ELEVATION OF EXISTING UTILITIES AS SHOWN ON THESE PLANS IS BASED ON RECORDS OF THE VARIOUS UTILITY COMPANIES AND, WHERE POSSIBLE, MEASUREMENTS TAKEN IN THE FIELD. THE INFORMATION IS NOT TO BE RELIED ON AS BEING EXACT OR COMPLETE. THE CONTRACTOR MUST CALL THE LOCAL UTILITY LOCATION CENTER AT LEAST 48 HOURS BEFORE ANY EXCAVATION TO REQUEST EXACT FIELD LOCATIONS OF THE UTILITIES. IT SHALL BE THE RESPONSIBILITY OF THE CONTRACTOR TO RELOCATE ALL EXISTING UTILITIES WHICH CONFLICT WITH THE PROPOSED IMPROVEMENTS SHOWN ON THE PLANS.

PERCEPTION DESIGN GROUP, INC.
6901 SOUTH PIERCE STREET, SUITE 315, LITTLETON, CO 80128 303-232-8088
WWW.PERCEPTIONDESIGNGROUP.COM

PREPARED UNDER THE DIRECT SUPERVISION OF
JERRY W. DAVIDSON, P.E.
COLORADO REG # 30226
FOR AND ON BEHALF OF
PERCEPTION DESIGN GROUP, INC.

REVISIONS		
△	DATE	DESCRIPTION
	08/31/18	FOURTH SUBMITTAL
	05/25/18	THIRD SUBMITTAL
	03/19/18	PWSD SUBMITTAL
	02/28/18	SECOND SUBMITTAL
	10/24/17	INITIAL SUBMITTAL

WATER PLAN & PROFILE

PARKER POINTE
LOTS 1 THRU 15 AND TRACTS A AND B, PARKER POINTE FILING NO. 1
SOUTHEAST CORNER PARKER ROAD AND STROH ROAD
PARKER, COLORADO

design by:	JWD
approved by:	JWD
project no.:	2015-015
date:	10/01/17

SHEET
C7.12

\\PDG-NAS\PUBLIC\PROJECTS\2015-015 PARKER AND STROH\DWG\WATER AND SANITARY PLANS\2015-015 CDS -WATER PLAN.DWG 8/31/2018 3:08 PM

WATER MAINS MAY NOT BE TAPPED FOR A SERVICE LINE UNTIL TAP FEES ARE PAID

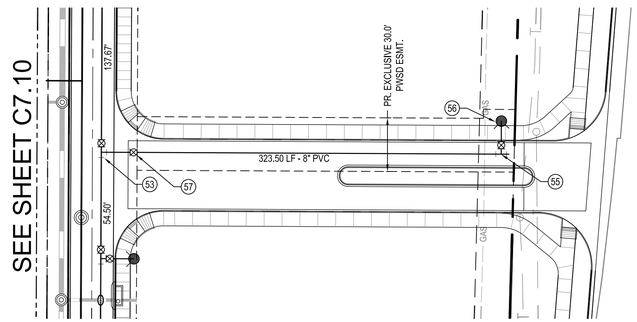

ITEMS ALONG ALIGNMENT			
#	ITEM	STA.	OS (FT.)
53	8"X8" TEE W/ KB	0+00.00	0.00
55	8"X6" TEE W/ KB	3+23.50	0.00
56	PR. 6" HYDRANT ASSY. / 18.50LF 6" DIP / 6" G.V.	3+23.50	18.50 L
57	PR. 8" G.V.	1+18.00	0.00

WARNING
HIGH-PRESSURE PIPELINE(S)
EXCAVATION AND / OR CONSTRUCTION PROHIBITED WITHOUT COMPLIANCE WITH STATE ONE-CALL, AND WITHOUT WRITTEN PERMISSION FROM MAGELLAN PIPELINE COMPANY.

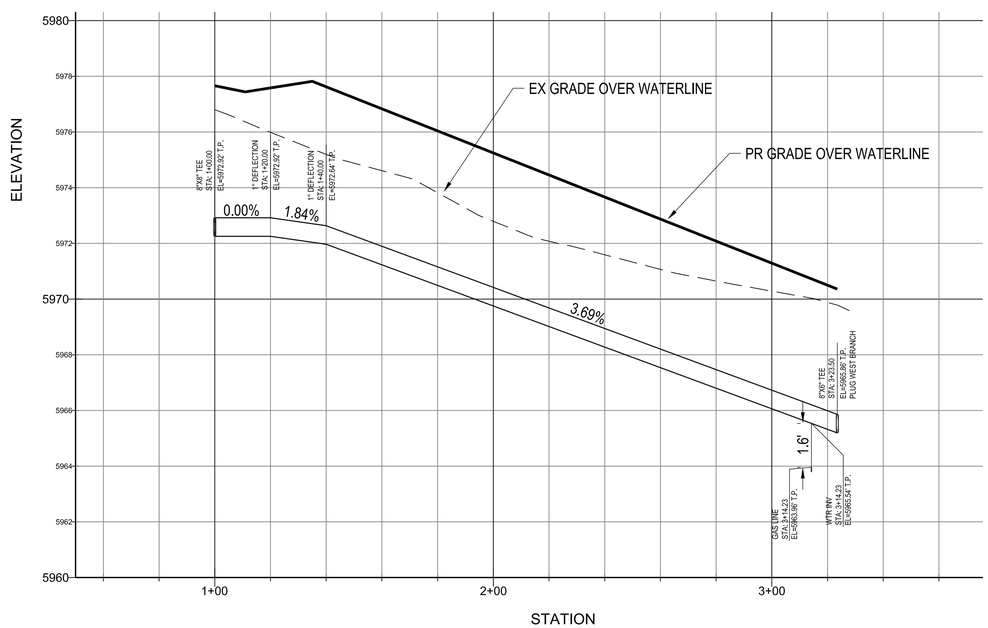

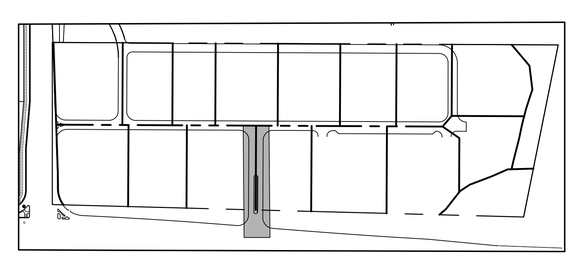

KEY MAP

N

GRAPHIC SCALE
-40 0 20 40 80
(IN FEET)
1 inch = 40 ft.

BENCHMARK

BENCHMARK: DOUGLAS COUNTY SURVEY CONTROL MONUMENT TT15A – 3" DIAMETER DOUGLAS COUNTY GIS ALUMINUM CAP AT THE NE CORNER OF STROH ROAD AND SOUTH PARKER ROAD (US HIGHWAY 83) ELEVATION: 5970.79 FEET (NAVD 1988 DATUM)

CALL UTILITY NOTIFICATION CENTER OF COLORADO
1-800-922-1987
CALL 2-BUSINESS DAYS IN ADVANCE BEFORE YOU DIG, GRADE, OR EXCAVATE FOR THE MARKING OF UNDERGROUND MEMBER UTILITIES.

CAUTION: NOTICE TO CONTRACTOR THE CONTRACTOR IS SPECIFICALLY CAUTIONED THAT THE LOCATION AND/OR ELEVATION OF EXISTING UTILITIES AS SHOWN ON THESE PLANS IS BASED ON RECORDS OF THE VARIOUS UTILITY COMPANIES AND, WHERE POSSIBLE, MEASUREMENTS TAKEN IN THE FIELD. THE INFORMATION IS NOT TO BE RELIED ON AS BEING EXACT OR COMPLETE. THE CONTRACTOR MUST CALL THE LOCAL UTILITY LOCATION CENTER AT LEAST 48 HOURS BEFORE ANY EXCAVATION TO REQUEST EXACT FIELD LOCATIONS OF THE UTILITIES. IT SHALL BE THE RESPONSIBILITY OF THE CONTRACTOR TO RELOCATE ALL EXISTING UTILITIES WHICH CONFLICT WITH THE PROPOSED IMPROVEMENTS SHOWN ON THE PLANS.

PERCEPTION
DESIGN GROUP, INC.
6901 SOUTH PIERCE STREET, SUITE 315, LITTLETON, CO 80128 303-232-8088
WWW.PERCEPTIONDESIGNGROUP.COM

PREPARED UNDER THE DIRECT SUPERVISION OF
JERRY W. DAVIDSON, P.E.
COLORADO REG # 30226
FOR AND ON BEHALF OF
PERCEPTION DESIGN GROUP, INC.

REVISIONS

△	DATE	DESCRIPTION
	08/31/18	FOURTH SUBMITTAL
	05/25/18	THIRD SUBMITTAL
	03/19/18	PVSD SUBMITTAL
	02/28/18	SECOND SUBMITTAL
	10/24/17	INITIAL SUBMITTAL

WATER PLAN & PROFILE

PARKER POINTE
LOTS 1 THRU 15 AND TRACTS A AND B, PARKER POINTE FILING NO. 1
SOUTHEAST CORNER PARKER ROAD AND STROH ROAD
PARKER, COLORADO

design by:	JWD
approved by:	JWD
project no.:	2015-015
date:	10/01/17

SHEET
C7.13

\\PDG-NAS\PUBLIC\PROJECTS\2015-015 PARKER AND STROH\DWG\WATER AND SANITARY PLANS\2015-015 CDS -WATER PLAN.DWG 8/31/2018 3:09 PM

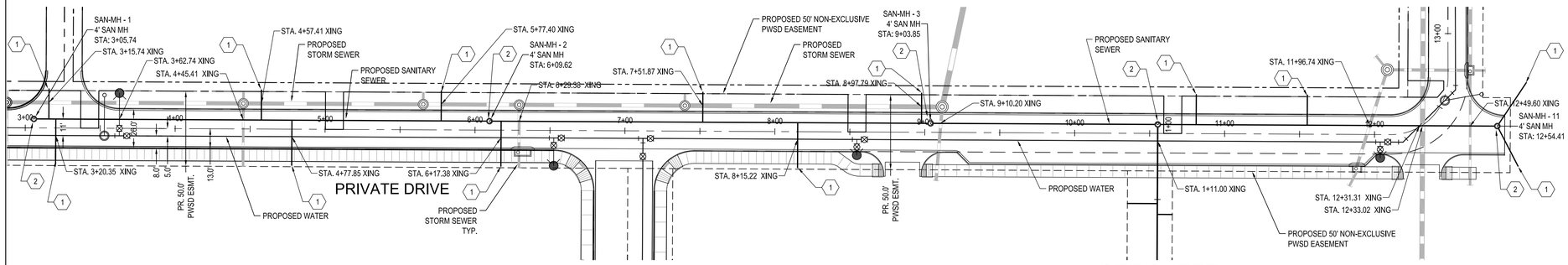

LEGEND

- PROPERTY LINE
- LOT LINE
- PROPOSED EASEMENT / SETBACK
- EXISTING RIGHT-OF-WAY
- PROPOSED SAWCUT LINE
- PROPOSED CURB
- PROPOSED FLOW LINE
- PROPOSED PAN/LIP
- PROPOSED SANITARY SEWER
- EXISTING SANITARY SEWER
- PROPOSED WATERLINE
- EXISTING WATERLINE
- PROPOSED STORM SEWER
- EXISTING STORM SEWER
- EXISTING / PROPOSED SANITARY MANHOLE *
- EXISTING / PROPOSED CLEAN OUT *
- UNDERGROUND UTILITY CROSSING

CONSTRUCTION NOTES

1. INSTALL 6" SERVICE LATERAL AT 2.0%. EXTEND BEYOND PAVEMENT, CAP AND MARK FOR FUTURE CONNECTION.
2. CONSTRUCT 4' DIAMETER CONCRETE MANHOLE.
3. CONCRETE ENCASE SANITARY SEWER 10' EACH SIDE OF CROSSING. SEE DETAIL S4.8 ON SHEET C7.91.

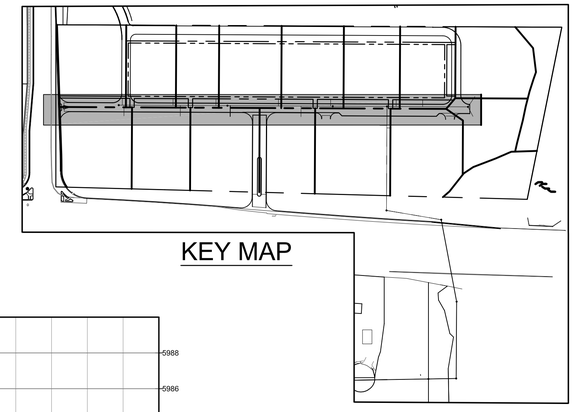

KEY MAP

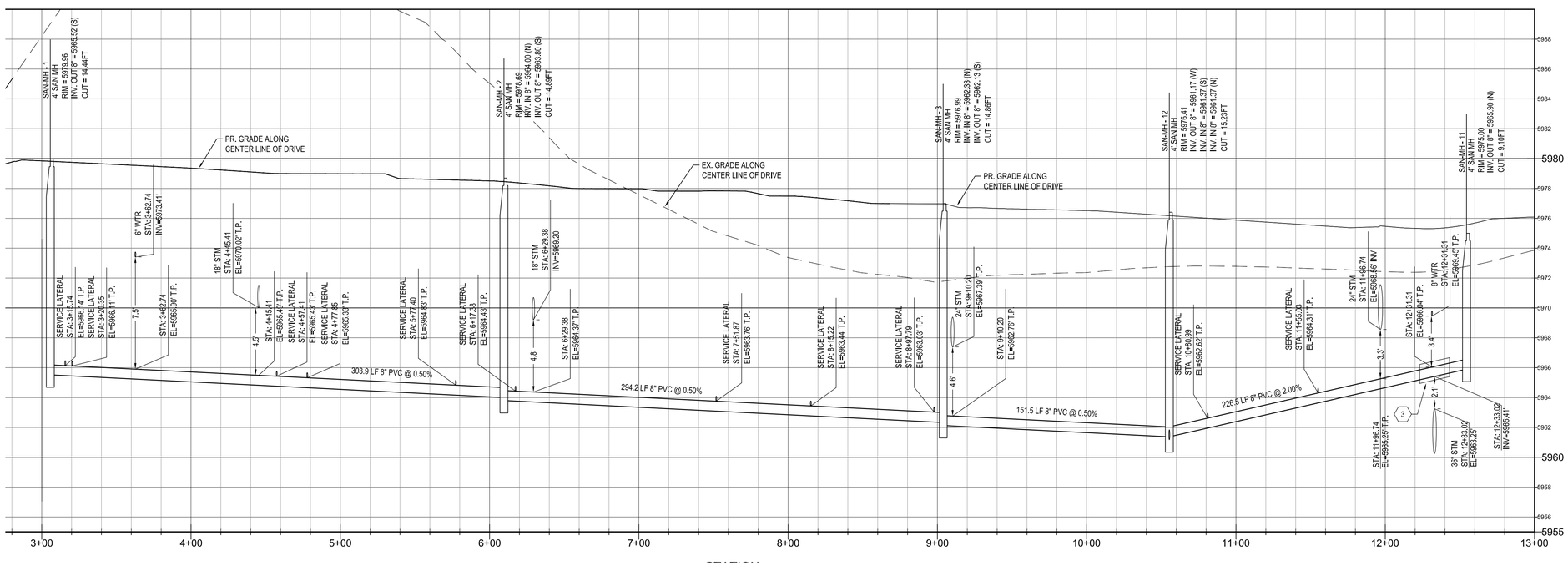

ABBREVIATIONS

ASSY	ASSEMBLY
BP	BOTTOM OF PIPE
ESMT	EASEMENT
ELEV	ELEVATION
EX	EXISTING
DIP	DUCTILE IRON PIPE
FG	FINISHED GRADE
FH	FIRE HYDRANT
FL	FLOWLINE
FU	FUTURE
GV	GATE VALVE
INV	INVERT
KB	KICK BLOCK / THRUST BLOCK
PR	PROPOSED
PVC	POLYVINYL CHLORIDE PIPE
TP	TOP OF PIPE
W/	WITH

CALL UTILITY NOTIFICATION CENTER OF COLORADO
1-800-922-1987
CALL 2-BUSINESS DAYS IN ADVANCE BEFORE YOU DIG, GRADE, OR EXCAVATE FOR THE MARKING OF UNDERGROUND MEMBER UTILITIES.

CAUTION: NOTICE TO CONTRACTOR THE CONTRACTOR IS SPECIFICALLY CAUTIONED THAT THE LOCATION AND/OR ELEVATION OF EXISTING UTILITIES AS SHOWN ON THESE PLANS IS BASED ON RECORDS OF THE VARIOUS UTILITY COMPANIES AND, WHERE POSSIBLE, MEASUREMENTS TAKEN IN THE FIELD. THE INFORMATION IS NOT TO BE RELIED ON AS BEING EXACT OR COMPLETE. THE CONTRACTOR MUST CALL THE LOCAL UTILITY LOCATION CENTER AT LEAST 48 HOURS BEFORE ANY EXCAVATION TO REQUEST EXACT FIELD LOCATIONS OF THE UTILITIES. IT SHALL BE THE RESPONSIBILITY OF THE CONTRACTOR TO RELOCATE ALL EXISTING UTILITIES WHICH CONFLICT WITH THE PROPOSED IMPROVEMENTS SHOWN ON THE PLANS.

GRAPHIC SCALE
(IN FEET)
1 inch = 40ft.

BENCHMARK

BENCHMARK: DOUGLAS COUNTY SURVEY CONTROL MONUMENT TT15A – 3" DIAMETER DOUGLAS COUNTY GIS ALUMINUM CAP AT THE NE CORNER OF STROH ROAD AND SOUTH PARKER ROAD (US HIGHWAY 83) ELEVATION: 5970.79 FEET (NAVD 1988 DATUM)

PERCEPTION DESIGN GROUP, INC.
6901 SOUTH PIERCE STREET, SUITE 315, LITTLETON, CO 80128 303-232-4868
WWW.PERCEPTIONDESIGNGROUP.COM

PREPARED UNDER THE DIRECT SUPERVISION OF
JERRY W. DAVIDSON, P.E.
COLORADO REG # 30226
FOR AND ON BEHALF OF
PERCEPTION DESIGN GROUP, INC.

DATE	DESCRIPTION
08/31/18	FOURTH SUBMITTAL
05/25/18	THIRD SUBMITTAL
03/19/18	PWSD SUBMITTAL
02/28/18	SECOND SUBMITTAL
10/24/17	INITIAL SUBMITTAL

REVISIONS

SANITARY PLAN & PROFILE

PARKER POINTE
LOTS 1 THRU 15 AND TRACTS A AND B, PARKER POINTE FILING NO. 1
SOUTHEAST CORNER PARKER ROAD AND STROH ROAD
PARKER, COLORADO

design by:	JWD
approved by:	JWD
project no.:	2015-015
date:	10/01/17

SHEET
C7.14

\\PDG-NAS\PUBLIC\PROJECTS\2015-015 PARKER AND STROH\DWG\WATER AND SANITARY PLANS\2015-015 CDS -SANITARY PLAN.DWG 8/31/2018 2:24 PM

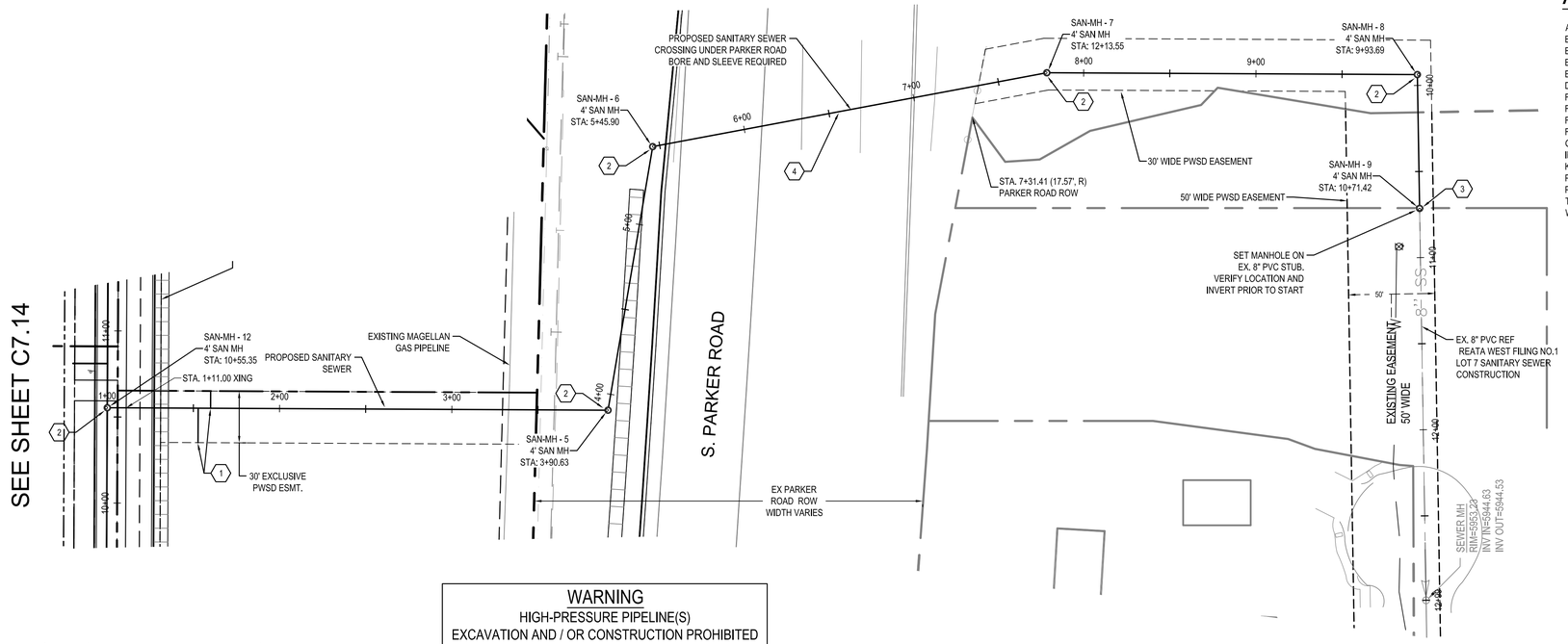

ABBREVIATIONS

ASSY	ASSEMBLY
BP	BOTTOM OF PIPE
ESMT	EASEMENT
ELEV	ELEVATION
EX	EXISTING
DIP	DUCTILE IRON PIPE
FG	FINISHED GRADE
FH	FIRE HYDRANT
FL	FLOWLINE
FU	FUTURE
GV	GATE VALVE
INV	INVERT
KB	KICK BLOCK / THRUST BLOCK
PR	PROPOSED
PVC	POLYVINYL CHLORIDE PIPE
TP	TOP OF PIPE
W/	WITH

LEGEND

- PROPERTY LINE
- LOT LINE
- PROPOSED EASEMENT / SETBACK
- EXISTING RIGHT-OF-WAY
- PROPOSED SAWCUT LINE
- PROPOSED CURB
- PROPOSED FLOW LINE
- PROPOSED PAN/LIP
- PROPOSED SANITARY SEWER
- EXISTING SANITARY SEWER
- PROPOSED WATERLINE
- EXISTING WATERLINE
- PROPOSED STORM SEWER
- EXISTING STORM SEWER
- EXISTING / PROPOSED SANITARY MANHOLE *
- EXISTING / PROPOSED CLEAN OUT *
- UNDERGROUND UTILITY CROSSING

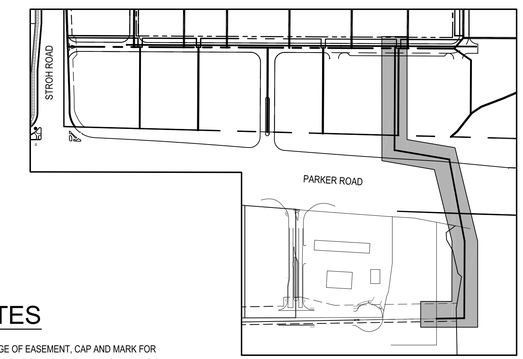

KEY MAP

WARNING
HIGH-PRESSURE PIPELINE(S)
EXCAVATION AND / OR CONSTRUCTION PROHIBITED WITHOUT COMPLIANCE WITH STATE ONE-CALL, AND WITHOUT WRITTEN PERMISSION FROM MAGELLAN PIPELINE COMPANY.

CONSTRUCTION NOTES

1. INSTALL 6" SERVICE LATERAL AT 2.0%. EXTEND TO EDGE OF EASEMENT, CAP AND MARK FOR FUTURE CONNECTION.
2. CONSTRUCT 4' DIAMETER CONCRETE MANHOLE.
3. CONNECT TO EXISTING SEWER MAIN. VERIFY DEPTH AND LOCATION PRIOR TO ANY SANITARY SEWER CONSTRUCTION.
4. BORE AND CASE SANITARY SEWER LINE UNDER PARKER ROAD. USE 18" STEEL CARRIER PIPE PER DETAIL.

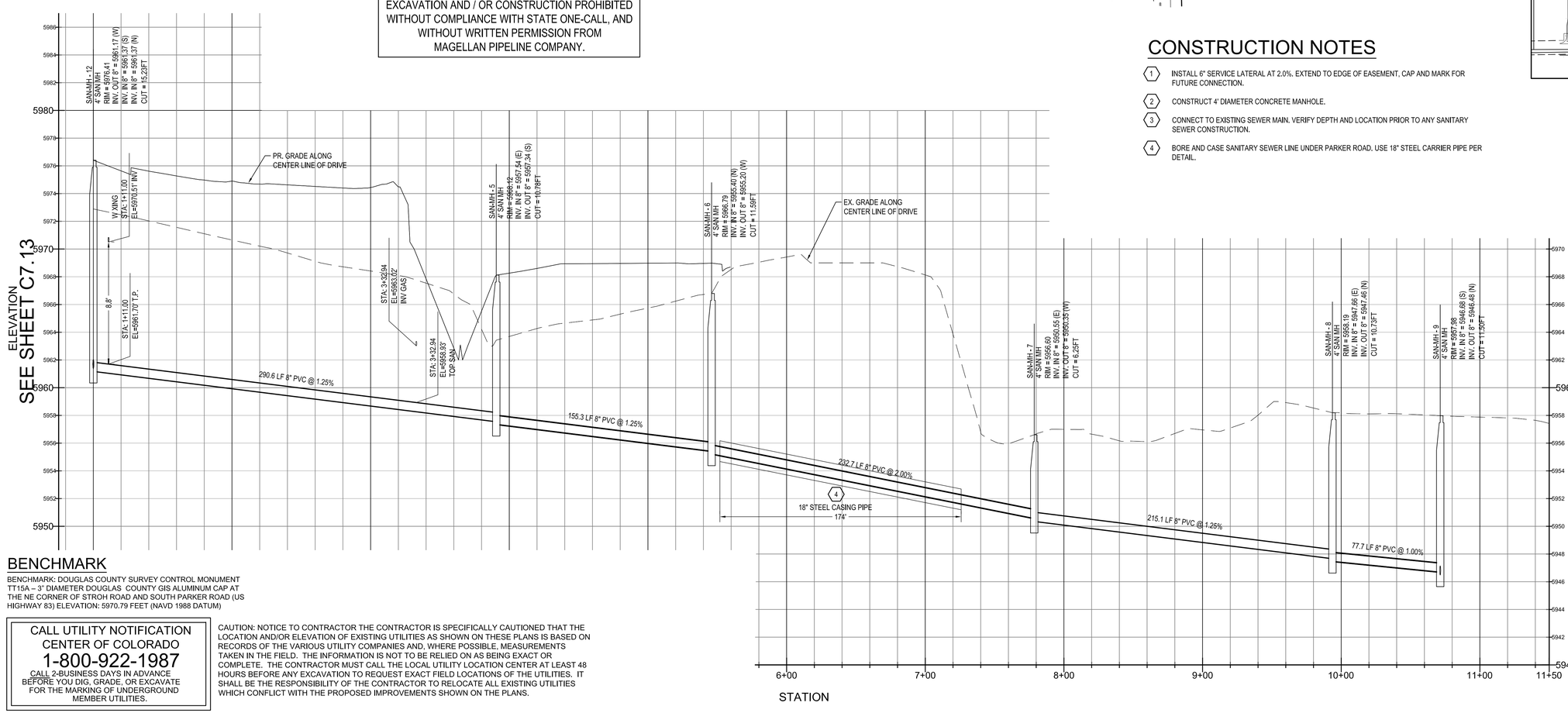

BENCHMARK

BENCHMARK: DOUGLAS COUNTY SURVEY CONTROL MONUMENT TT15A – 3" DIAMETER DOUGLAS COUNTY GIS ALUMINUM CAP AT THE NE CORNER OF STROH ROAD AND SOUTH PARKER ROAD (US HIGHWAY 83) ELEVATION: 5970.79 FEET (NAVD 1988 DATUM)

CALL UTILITY NOTIFICATION CENTER OF COLORADO
1-800-922-1987
CALL 2-BUSINESS DAYS IN ADVANCE BEFORE YOU DIG, GRADE, OR EXCAVATE FOR THE MARKING OF UNDERGROUND MEMBER UTILITIES.

CAUTION: NOTICE TO CONTRACTOR THE CONTRACTOR IS SPECIFICALLY CAUTIONED THAT THE LOCATION AND/OR ELEVATION OF EXISTING UTILITIES AS SHOWN ON THESE PLANS IS BASED ON RECORDS OF THE VARIOUS UTILITY COMPANIES AND, WHERE POSSIBLE, MEASUREMENTS TAKEN IN THE FIELD. THE INFORMATION IS NOT TO BE RELIED ON AS BEING EXACT OR COMPLETE. THE CONTRACTOR MUST CALL THE LOCAL UTILITY LOCATION CENTER AT LEAST 48 HOURS BEFORE ANY EXCAVATION TO REQUEST EXACT FIELD LOCATIONS OF THE UTILITIES. IT SHALL BE THE RESPONSIBILITY OF THE CONTRACTOR TO RELOCATE ALL EXISTING UTILITIES WHICH CONFLICT WITH THE PROPOSED IMPROVEMENTS SHOWN ON THE PLANS.

GRAPHIC SCALE
(IN FEET)
1 inch = 40 ft.

PERCEPTION DESIGN GROUP, INC.
6901 SOUTH PIERCE STREET, SUITE 315, LITTLETON, CO 80128 303-232-8868
WWW.PERCEPTIONDESIGNGROUP.COM

PREPARED UNDER THE DIRECT SUPERVISION OF
JERRY W. DAVIDSON, P.E.
COLORADO REG # 30226
FOR AND ON BEHALF OF
PERCEPTION DESIGN GROUP, INC.

	DATE	DESCRIPTION
	08/31/18	FOURTH SUBMITTAL
	05/25/18	THIRD SUBMITTAL
	03/19/18	PWSD SUBMITTAL
	02/28/18	SECOND SUBMITTAL
1	10/24/17	INITIAL SUBMITTAL

REVISIONS

SANITARY PLAN & PROFILE

PARKER POINTE
LOTS 1 THRU 15 AND TRACTS A AND B, PARKER POINTE FILING NO. 1
SOUTHEAST CORNER PARKER ROAD AND STROH ROAD
PARKER, COLORADO

design by:	JWD
approved by:	JWD
project no.:	2015-015
date:	10/01/17

SHEET
C7.15

\\PDG-NAS\PUBLIC\PROJECTS\2015-015 PARKER AND STROH\DWG\WATER AND SANITARY PLANS\2015-015 CDS -SANITARY PLAN.DWG 8/31/2018 2:23 PM

INSPECTION POLICY:

1. ALL SERVICE INSPECTIONS MUST BE SCHEDULED WITH THE DISTRICT OFFICE AT LEAST 24 HOURS IN ADVANCE OF THE REQUESTED INSPECTION.
2. IF THE CONTRACTOR IS NOT READY FOR INSPECTION WHEN THE INSPECTOR ARRIVES AT THE SITE, A RE-INSPECTION WILL HAVE TO BE SCHEDULED IN ACCORDANCE WITH NOTE 1 ABOVE AND A RE-INSPECTION FEE CHARGED.
3. SHOULD THE SERVICE LINES BE DAMAGED BY LATER CONSTRUCTION, AN INSPECTION OF THE REPAIR WILL BE REQUIRED IN ACCORDANCE WITH NOTES 1 AND 2 ABOVE.
4. THE CONTRACTOR SHALL LEAVE ALL PIPE AND FITTINGS EXPOSED FOR THE INSPECTOR TO OBSERVE. INSPECTORS WILL NOT ENTER ANY EXCAVATIONS TO CHECK MATERIALS. THE TOP LAYER OF BEDDING CAN BE ADDED AFTER THE INSPECTION HAS BEEN COMPLETED.
5. ALL EXCAVATIONS SHALL BE IN ACCORDANCE WITH OSHA STANDARDS.
6. LOTS WITHOUT BULDING ADDRESSES OR LOT AND BLOCK NUMBERS BEFORE DISTRICT INSPECTION OR METER SET WILL FAIL AUTOMATICALLY.
7. CONTRACTOR MUST BE PRESSENT AT TIME OF INSPECTION UNLESS COORDINATED WITH DISTRICT INSPECTOR.

INSTALLATION NOTES:

SEWER

1. ACCEPTABLE PIPE MATERIALS ARE TO BE SDR 35 PVC PIPE, ABS PIPE AND PVC SCHD 40 PIPE. APPROVED BEDDING IS TO BE SQUEEGEE.
2. NO-HUB CLAMPS SHALL BE USED TO JOIN 2 MALE PIPE ENDS WITH A MAXIMUM DEFLECTION OF 3°.
3. MINIMUM GRADE SHALL BE 2%.
4. INSTALLATION SHALL INCLUDE NO MORE THAN 3 BENDS. 90° BENDS ARE NOT ALLOWED. SOLVENT WELDED PIPE WILL NOT BE ALLOWED.
5. CLEAN-OUTS SHALL BE INSTALLED AT 100' INTERVALS AND EVERY CHANGE IN DIRECTION. CLEAN-OUTS ARE NOT REQUIRED FOR SERVICES LESS THAN 100' UNLESS THERE ARE CHANGES IN DIRECTION. PROVIDE DUAL CLEAN-OUT WITHIN 5 FEET OF FOUNDATION.
6. STRESSING OF THE PIPE BETWEEN FITTINGS WILL NOT BE ALLOWED.
7. SEWER SERVICE LINE SHALL NOT BE LOCATED UNDER CONCRETE SURFACE.
8. ALL SERVICES WILL BE PERMANANTELY MARKED ON CURB FACE AS FOLLOWS:
   "X" FOR SANITARY SEWER SERVICE
   "V" FOR WATER SERVICES

PARKER WATER & SANITATION DISTRICT

DISTRICT POLICIES & INSTALLATION NOTES FOR SEWER SERVICES

SCALE: NONE	DATE: 2/98
APPROVED: PVR	01/02 10/16 1/08 1/16
DIRECTOR OF ENGINEERING	

2016 REVISION — SHEET S1.1

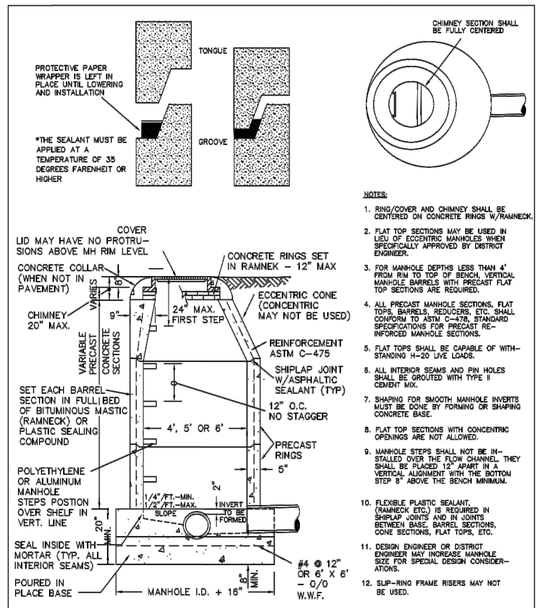

NOTES:

1. RING/COVER AND CHIMNEY SHALL BE CENTERED ON CONCRETE RINGS W/RAMNECK.
2. FLAT TOP SECTIONS MAY BE USED IN LIEU OF ECCENTRIC MANHOLES WHEN SPECIFICALLY APPROVED BY DISTRICT ENGINEER.
3. FOR MANHOLE DEPTHS LESS THAN 4' FROM RIM TO TOP OF BENCH, VERTICAL MANHOLE BARRELS WITH PRECAST FLAT TOP SECTIONS ARE REQUIRED.
4. ALL PRECAST MANHOLE SECTIONS, FLAT TOPS, BARRELS, REDUCERS, ETC. SHALL CONFORM TO ASTM C-478, STANDARD SPECIFICATIONS FOR PRECAST REINFORCED MANHOLE SECTIONS.
5. FLAT TOPS SHALL BE CAPABLE OF WITHSTANDING H-20 LIVE LOADS.
6. ALL INTERIOR SEAMS AND PIN HOLES SHALL BE GROUTED WITH TYPE II CEMENT MIX.
7. SHAPING FOR SMOOTH MANHOLE INVERTS MUST BE DONE BY FORMING OR SHAPING CONCRETE BASE.
8. FLAT TOP SECTIONS WITH CONCENTRIC OPENINGS ARE NOT ALLOWED.
9. MANHOLE STEPS SHALL NOT BE INSTALLED OVER THE FLOW CHANNEL. THEY SHALL BE PLACED 12" APART IN A VERTICAL ALIGNMENT WITH THE BOTTOM STEP 8" ABOVE THE BENCH MINIMUM.
10. FLEXIBLE PLASTIC SEALANT, (RAMNECK ETC.) IS REQUIRED IN SHIPLAP JOINTS AND IN JOINTS BETWEEN BASE, BARREL SECTIONS, CONE SECTIONS, FLAT TOPS, ETC.
11. DESIGN ENGINEER OR DISTRICT ENGINEER MAY INCREASE MANHOLE SIZE FOR SPECIAL DESIGN CONSIDERATIONS.
12. SLIP-RING FRAME RISERS MAY NOT BE USED.

PIPE I.D.	MANHOLE I.D.
18" & SMALLER	4'-0"
21" TO 48"	5'-0"
54"	6'-0"
60" & LARGER	SPECIAL DESIGN

PARKER WATER & SANITATION DISTRICT

PARKER MANHOLE ECCENTRIC CONE

SCALE: NONE	DATE: 2/98
APPROVED: PVR	4/01 10/16 01/02 1/08 1/16
DIRECTOR OF ENGINEERING	

2016 REVISION — SHEET S3.1

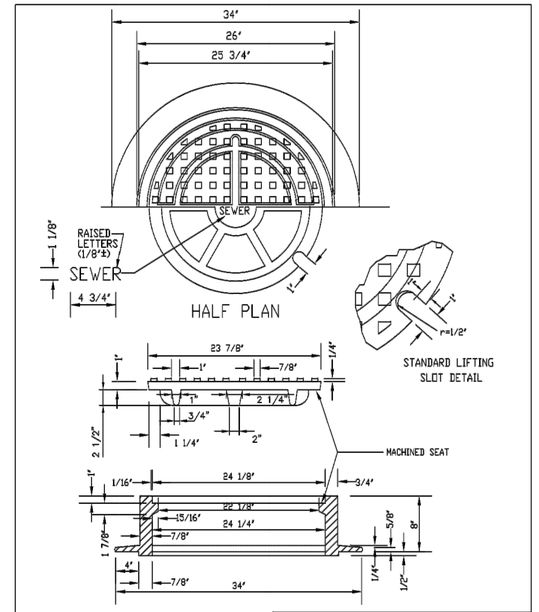

NOTE:

1. Casting Specifications: ASTM A-48 With A Minimum Tensile Strength Of 25 KSI (Class 25)
2. All Casting To Be Dipped In Asphalt Base Paint (Or Approved Equal).
3. No other manhole lids will be accepted without prior approval from the District Engineer.

PARKER WATER & SANITATION DISTRICT

24" DIAMETER RING AND COVER

SCALE: NONE	DATE: 2/98
APPROVED: PVR	01/16 10/16
DIRECTOR OF ENGINEERING	

2016 REVISION — SHEET S3.9

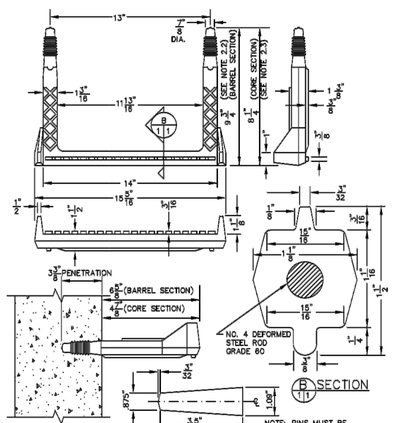

NOTE: PINS MUST BE SMOOTH AND CONTINUOUSLY TAPERED.

NOTES:

2.1 ASTM SPECIFICATIONS:
   a) ASTM C-478
   b) ASTM A-615 GRADE 60 (STEEL ROD)
   c) ASTM 2148-89, TYPE II, GRADE 16906 (POLYPROPYLENE)
2.2 STEPS INSTALLED IN MANHOLE BARREL SECTIONS OR VERTICAL WALLS OF STRUCTURE SHALL HAVE A 9-3/4 INCH LEG AND SHALL PROJECT FROM THE WALL 8-5/8 INCHES.
2.3 STEPS INSTALLED IN MANHOLE CONE SECTIONS SHALL HAVE AN 8-1/4 INCH LEG AND SHALL PROJECT FROM THE WALL 4-7/8 INCHES.
2.4 ALL STEPS SHALL HAVE A PENETRATION DEPTH INTO THE WALL OF 3-3/8 INCHES.
2.5 STEPS SHALL BE INSTALLED BY THE "PRESS-FIT" METHOD UTILIZING A SPECIALLY TAPERED PIN TO FORM THE INSERT HOLE AS SHOWN.
2.6 INSTALLED STEPS SHALL BE CAPABLE OF WITHSTANDING A PULL OUT FORCE OF 2500 P.S.I. PER LEG FOR A MINIMUM PERIOD OF TWO MINUTES.
2.7 STEPS SHALL BE INSTALLED BY THE "PRESS-FIT" METHOD EXCLUSIVELY FOLLOWING MANUFACTURER'S RECOMMENDED PROCEDURE AND SHALL NOT BE GROUTED IN PLACE.

POLYPROPYLENE REINFORCED PLASTIC STEP

PARKER WATER & SANITATION DISTRICT

POLYPROPYLENE REINFORCED PLASTIC MANHOLE STEP

SCALE: NONE	DATE: 2/00
APPROVED: PVR	01/16 10/16
DIRECTOR OF ENGINEERING	

2016 REVISION — SHEET S3.11

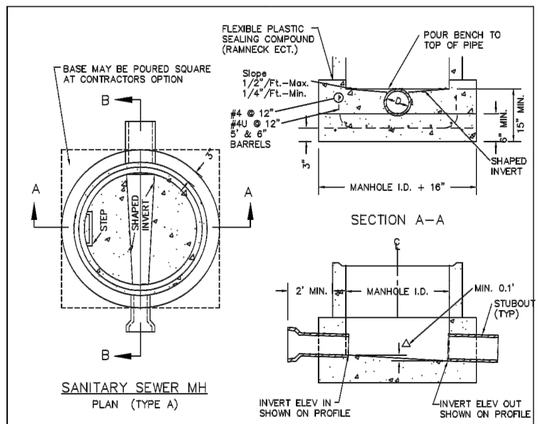

NOTES:

1. Manhole barrel min. thickness to be 5".
2. Shaping for smooth manhole inverts may be done by forming or shaping with cement mortar (San. Sewer).
3. The manhole steps shall conform to District Standards and Specifications.
4. Precast sections to conform to A.S.T.M C-478.
5. All dead-end manholes, that call out a stub out, shall be thru at 0.40% minimum slope.
6. Stub outs shall extend 2'-0" minimum past manhole O.D. and be satisfactorily plugged.
7. Reinforcing in base required for manhole.
8. Slope of bench = 1/2"/Ft.-Max. 1/4"/Ft.-Min.
9. △ = invert drop thru MH (if △ > 18", outside drop MH required). Min. 0.1' for all straight through MH and 0.2' for all angled MH.

PARKER WATER & SANITATION DISTRICT

CAST-IN-PLACE MANHOLE BASE DETAIL

SCALE: NONE	DATE: 2/98
APPROVED: PVR	01/02 01/16 10/16
DIRECTOR OF ENGINEERING	

2016 REVISION — SHEET S3.5

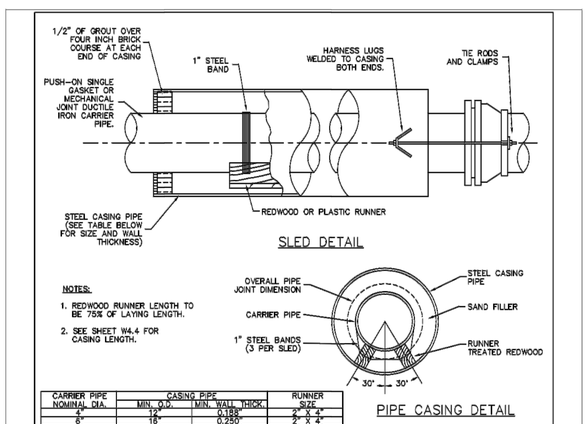

CARRIER PIPE NOMINAL DIA.	CASING PIPE MIN. O.D.	CASING PIPE MIN. WALL THICK.	RUNNER SIZE
4"	12"	0.188"	2" X 4"
6"	16"	0.250"	2" X 4"
8"	18"	0.282"	2" X 4"
12"	25"	0.344"	2" X 4"
18"	28"	0.406"	2" X 6"
20"	32"	0.469"	2" X 8"

PARKER WATER & SANITATION DISTRICT

BORE CASING DETAILS

SCALE: NONE	DATE: 2/98
APPROVED: PVR	2/00 1/18 10/16
DIRECTOR OF ENGINEERING	

2016 REVISION — SHEET W4.5

PERCEPTION DESIGN GROUP, INC.
6901 SOUTH PIERCE STREET, SUITE 315, LITTLETON, CO 80128 303-323-8888
WWW.PERCEPTIONDESIGNGROUP.COM

PREPARED UNDER THE DIRECT SUPERVISION OF JERRY W. DAVIDSON, P.E. COLORADO REG # 30226 FOR AND ON BEHALF OF PERCEPTION DESIGN GROUP, INC.

△	DATE	DESCRIPTION
	08/31/18	FOURTH SUBMITTAL
	05/25/18	THIRD SUBMITTAL
	03/19/18	PWSD SUBMITTAL
	02/28/18	SECOND SUBMITTAL
	10/24/17	INITIAL SUBMITTAL

REVISIONS

SANITARY SEWER DETAILS

PARKER POINTE
LOTS 1 THRU 15 AND TRACTS A AND B, PARKER POINTE FILING NO. 1
SOUTHEAST CORNER PARKER ROAD AND STROH ROAD
PARKER, COLORADO

design by:	JWD
approved by:	JWD
project no.:	2015-015
date:	10/01/17

SHEET C7.90

\\PDG-NAS\PUBLIC\PROJECTS\2015-015 PARKER AND STROH\DWG\WATER AND SANITARY PLANS\2015-015 CDS - SAN & WAT DETLS.DWG 8/31/2018 2:13 PM

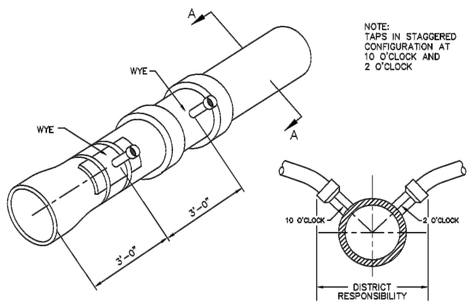

NOTE:
TAPS IN STAGGERED CONFIGURATION AT 10 O'CLOCK AND 2 O'CLOCK

SECTION A – A

Sewer service connections shall be positioned at either the 2 o'clock or the 10 o'clock postion on the circumference of the sewer main. On new installations, tee or wye fittings shall be used.When tapping into existing sewer main, a saddle connection and approved coring method shall be used. The minimum distance between service connections made along the pipe shall be 3 feet. The minimum distance from either the bell or spigot end of a pipe shall be 3 feet. The minimum distance from the center of a manhole to a service connection shall be either 7 feet or the transition point from the manhole trench to the normal pipe trench, whichever is greater. A maximum of 4 sewer service connections shall be allowed per 20 foot length of pipe. In all cases, a specific soils investigation should be conducted to assure that the external loading will be within allowable limits regardless of the number of taps involved.

DOMESTIC SEWER TAPPING DETAIL

PARKER WATER & SANITATION DISTRICT	
DOMESTIC SEWER TAPPING DETAIL	
SCALE: NONE	DATE: 2/96
APPROVED: PVR	4/01 1/08 1/16 10/16
DIRECTOR OF ENGINEERING	

2016 REVISION

SHEET S4.13

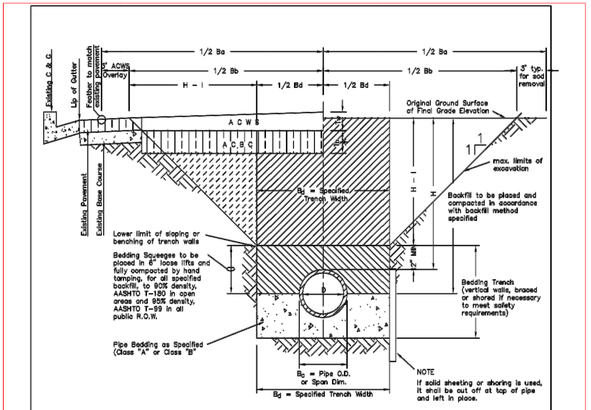

TYPICAL TRENCH DETAIL

T_B = Thickness of Asphaltic Concrete Base Course (A C B C)

T_W = Thickness of Asphaltic Concrete Wearing Surface (A C W S)

T_O = Total Asphalt Thickness (T_B + T_W)

B_O = Outside Pipe or Conduit Span Dimension

B_d = Specified Bedding Trench Width and Max Bedding Trench Width at a point 12" above Top of Pipe (See Note 2)

B_b = Max. Pay Width of Asphaltic Concrete Base Course (or Asphaltic Concrete Cold Mix) (See Note 3)

B_d = Max. Pay Width of Asphaltic Concrete Wearing Surface or Sod Replacement (See Note 3)

H = Depth of Surface to Top of Pipe

H–1= Depth from Surface to 1 ft. above Top of Pipe

NOTES

1. *Sloping or benching of trench side walls, where permitted shall be in accordance with applicable Federal, State and Local safety regulations.*
2. *Trench shall be braced and shored as necessary to afford safe working conditions or to protect adjacent utilities, structures, etc.. Unless otherwise specified on the plans, no pavement will be made for removal, replacement or relocation of curb and gutter, utilities, sidewalk, structures, etc. outside the maximum limits of excavation as shown and the contractor shall be responsible for protection of same.*
3. *If dimension "B_d" is ≤ 5', then existing asphalt pavement shall be removed and replaced up to the gutter. Maximum asphalt pay widths, B_b & B_d, shall then be based upon this actual width.*

TABLE II
ASPHALT AND BASE COURSE REPLACEMENT SCHEDULE

STREET WIDTH	ASPHALTIC BASE COURSE (T_B)	ASPHALTIC WEARING SURFACE (T_W)	TOTAL THICKNESS (T_O)
UP TO 36'	4"	2"	6"
36' TO 44'	4"	3"	7"
44' TO 48'	5"	3"	8"
WIDER THAN 48'	6"	3"	9"

PARKER WATER & SANITATION DISTRICT	
SEWER TRENCHING AND BEDDING DETAIL	
SCALE: NONE	DATE: 2/96
APPROVED: PVR	5/98 1/16 10/16
DIRECTOR OF ENGINEERING	

2016 REVISION

SHEET S4.1

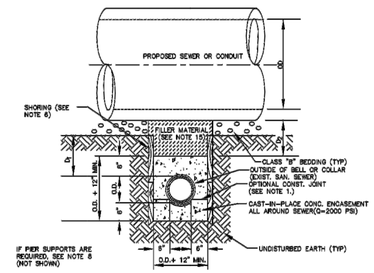

TYPE III
CONCRETE ENCASEMENT FOR SANITARY SEWERS
(FULL ENCASEMENT) NO SCALE

GENERAL NOTES FOR TYPE I,II,& III ENCASEMENT

1. CONCRETE TO BE CAST AGAINST UNDISTURBED SOIL OR SHORING. IF OPTIONAL CONSTRUCTION JOINT IS USED & BOTTOM HALF OF ENCASEMENT IS POURED SEPARATELY, A ONE INCH LAYER OF SAND OR MORTAR SHALL BE PLACED BETWEEN BOTTOM OF SANITARY SEWER AND TOP OF CONCRETE.
2. LENGTH OF ENCASEMENT FOR:
   (a) TYPE I & TYPE III ENCASEMENT SHALL EXTEND FULL TRENCH WIDTH EXCAVATED FOR PROPOSED SEWER OR CONDUIT.
   (b) TYPE II ENCASEMENT SHALL EXTEND AT LEAST 10 FEET EACH SIDE OF WATER MAIN.
3. UNLESS OTHERWISE NOTED ON PLAN/PROFILE DRAWINGS, TYPE I,II & III ENCASEMENTS NEED NOT BE REINFORCED. REINFORCEMENT, IF REQUIRED, TO BE SPECIFIED AND DETAILED SEPARATELY ON PLAN & PROFILE DRAWINGS.
4. TYPE I, II OR III ENCASEMENTS ARE REQUIRED UNDER FOLLOWING CONDITIONS:
   (a) TYPE I OR TYPE III IF D_o ≤ 18" (D_o ≤ 12") EXCEPT FOR SANITARY SEWER CROSSING OVER OR UNDER WATER MAINS.
   (b) TYPE III REQUIRED FOR SANITARY SEWERS CROSSING UNDER WATER MAINS WATER MAINS AND D_o ≤ 24" (D_o ≤ 18")
   (c) TYPE IIb IS REQUIRED FOR SANITARY SEWERS CROSSING OVER TOP OF WATER MAINS, REGARDLESS OF EMBEDMENT "D_e".
   (d) EXCEPT FOR UNUSUAL CIRCUMSTANCES, WATER MAIN CROSSINGS, OR WHERE UNSTABLE SOIL CONDITIONS ARE ENCOUNTERED, TYPE I ENCASEMENT WILL NORMALLY BE SATISFACTORY.
   (e) IF THE SANITARY SEWER IS REPLACED OR CONSTRUCTED OF DUCTILE IRON PIPE (AWWA C-150 OR C-151), CONCRETE ENCASEMENT MAY NOT BE REQUIRED.
5. FILLER MATERIAL BETWEEN CONDUITS TO BE:
   (a) APPROVED COMPRESSIBLE MATERIAL SUCH AS STYROFOAM, ETC IF D_e > 6" (D_e ≤ 6").
   (b) COMPACTED CLASS "B" BEDDING IF D_e ≤ D_o > 6". (IF D_e > 6" FOR TYPE IIb ENCASEMENT POUR CONCRETE ON UNDISTURBED SOIL)
6. SHORING OR SHEETING, IF USED, TO BE CUT OFF AT TOP OF ENCASEMENT.
7. THESE ENCASEMENT DETAILS MAY ALSO BE APPLICABLE FOR CONDUITS OTHER THAN STORM OR SANITARY SEWER INSTALLATIONS.
8. IN CERTAIN SITUATIONS WHERE CONDUIT DIAMETER "O" IS EXTREMELY LARGE, PIER SUPPORTS ON EACH SIDE OF SANITARY SEWER MAY ALSO BE REQUIRED. IF REQUIRED, SUPPORTS SHALL BE SPECIFIED AND DETAILED SEPARATELY ON PLAN AND PROFILE DRAWINGS.
9. CONCRETE ENCASED PIPING SHALL BE LINED WITH FELT LAYER.

PARKER WATER & SANITATION DISTRICT	
CONCRETE ENCASEMENT TYPE III	
SCALE: NONE	DATE: 2/96
APPROVED: PVR	5/98 1/16 10/16
DIRECTOR OF ENGINEERING	

2016 REVISION

SHEET S4.8

PERCEPTION
DESIGN GROUP, INC.
6901 SOUTH PIERCE STREET, SUITE 315, LITTLETON, CO 80128 303-323-8888
WWW.PERCEPTIONDESIGNGROUP.COM

PREPARED UNDER THE DIRECT SUPERVISION OF
JERRY W. DAVIDSON, P.E.
COLORADO REG # 30226
FOR AND ON BEHALF OF
PERCEPTION DESIGN GROUP, INC.

	DATE	DESCRIPTION
	08/31/18	FOURTH SUBMITTAL
	05/25/18	THIRD SUBMITTAL
	03/19/18	PWSD SUBMITTAL
	02/28/18	SECOND SUBMITTAL
1	10/24/17	INITIAL SUBMITTAL

REVISIONS

SANITARY SEWER DETAILS

PARKER POINTE
LOTS 1 THRU 15 AND TRACTS A AND B, PARKER POINTE FILING NO. 1
SOUTHEAST CORNER PARKER ROAD AND STROH ROAD
PARKER, COLORADO

design by: JWD
approved by: JWD
project no.: 2015-015
date: 10/01/17

SHEET
C7.91

\\PDG-NAS\PUBLIC\PROJECTS\2015-015 PARKER AND STROH\DWG\WATER AND SANITARY PLANS\2015-015 CDS - SAN & WAT DETLS.DWG 8/31/2018 2:13 PM

INSPECTION POLICY:

1. ALL SERVICE INSPECTIONS MUST BE SCHEDULED AT LEAST 24 HOURS IN ADVANCE OF THE REQUESTED INSPECTION.
2. SERVICE INSPECTIONS WILL OCCUR BETWEEN 1:00 P.M. AND 3:00 P.M. SPECIFIC INSPECTION TIMES ARE NOT AVAILABLE.
3. IF THE CONTRACTOR IS NOT READY FOR INSPECTION WHEN THE INSPECTOR ARRIVES AT THE SITE OR SERVICE FAILS, A RE-INSPECTION WILL HAVE TO BE SCHEDULED IN ACCORDANCE WITH NOTES 1 AND 2 ABOVE AND A RE-INSPECTION FEE CHARGED.
4. SHOULD THE SERVICE LINES BE DAMAGED BY LATER CONSTRUCTION, AN INSPECTION OF THE REPAIR WILL BE REQUIRED IN ACCORDANCE WITH NOTES 1 AND 2 ABOVE.
5. THE CONTRACTOR SHALL LEAVE ALL PIPE AND FITTINGS EXPOSED FOR THE INSPECTOR TO OBSERVE. INSPECTORS WILL NOT ENTER ANY EXCAVATIONS TO CHECK MATERIALS. THE TOP LAYER OF BEDDING CAN BE ADDED AFTER THE INSPECTION HAS BEEN COMPLETED.
6. ALL EXCAVATIONS SHALL BE IN ACCORDANCE WITH OSHA STANDARDS.
7. LOTS WITHOUT BUILDING ADDRESSES BEFORE DISTRICT INSPECTION OR METER SET WILL FAIL AUTOMATICALLY.
8. CONTRACTOR MUST BE PRESENT AT TIME OF INSPECTION. UNLESS COORDINATED WITH DISTRICT INSPECTOR.

INSTALLATION NOTES:

WATER

1. ACCEPTABLE PIPE MATERIALS SHALL BE K-COPPER TUBING. (3/4" MIN.)
2. APPROVED BEDDING TO BE SQUEEGEE.
3. ONLY ONE COUPLING WILL BE ALLOWED BETWEEN THE STUB-IN AND BUILDING. COMPRESSION COUPLINGS WILL NOT BE ALLOWED ON NEW CONSTRUCTION. SILVER SOLDERED JOINTS MUST BE USED ON SERVICES LARGER THAN 3/4". SILVER SOLDERED JOINTS MUST BE INSPECTED BY PWSD PRIOR TO BURIAL. FLARED COUPLINGS WILL BE ALLOWED ON ALL SERVICES 3/4" AND SMALLER.
4. A WATER SERVICE WHICH CROSSES A SEWER SERVICE CAN DO SO ONLY AT A 45-90° ANGLE. WATER SERVICES SHALL BE LOCATED A MINIMUM OF 18" ABOVE SEWER SERVICE.
5. WATER SERVICE FOUNDATION PENETRATIONS SHALL BE WATERPROOFED USING MASTIC OR OTHER APPROVED METHOD, CRAWL SPACE REQUIRES CONTINOUS COPPER WITH A 1' BURY.
6. CURB STOP MUST BE PLUMB AND CENTERED OVER THE NUT. IT SHOULD BE STRAPPED TO THE METER PIT (RESIDENTIAL INSTALLATIONS) OR CENTERED OVER THE EASEMENT LINE (COMMERCIAL INSTALLATIONS). THE ASSEMBLY MUST BE AT OR SLIGHTLY ABOVE FINISHED GRADE.
7. MOVED CURB BOXES MUST BE INSPECTED BY PWSD PRIOR TO BURIAL.
8. WATERLINE MUST BE ATTACHED TO A SUPPORT BOARD THAT IS MOUNTED TO THE WALL.
9. NO VOIDS ALLOWED UNDER WATERLINES FROM STOP BOX TO FOUNDATION.
10. CURBSTOP BOXES AND METER PITS CANNOT BE IN DRIVEWAYS.
11. ONLY 3/4" (JUMPER) PIPES (RESIDENCES) ARE ALLOWED. (JUMPER) PIPES WILL BE REMOVED PRIOR TO METER SET DATE.
12. ALL SERVICES WILL BE PERMANENTLY MARKED ON CURB FACE AS FOLLOWS:
    "X" FOR SANITARY SEWER SERVICE
    "V" FOR WATER SERVICES
13. NO SPLICES OR FLARED COUPLINGS ALLOWED ON SERVICES LARGER THAN 3/4". SILVER SOLDERED JOINTS MUST BE USED IN MOVING STOPBOXES ON SERVICES LARGER THAN 3/4". SILVER SOLDIERED JOINTS MUST BE INSPECTED BY PWSD PRIOR TO BURIAL. FLARED COUPLINGS WILL BE ALLOWED ON ALL SERVICES 3/4" AND SMALLER.

PARKER WATER & SANITATION DISTRICT

DISTRICT POLICIES & INSTALLATION NOTES FOR WATER SERVICES

SCALE: NONE	DATE: 2/98
APPROVED: PVR, DIRECTOR OF ENGINEERING	1/04, 1/16, 10/16

2016 REVISION — SHEET W1.1

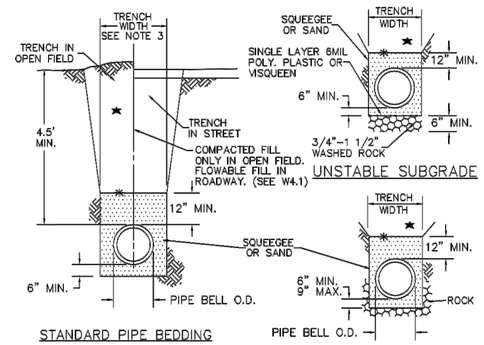

★ MACHINE COMPACTED TRENCH BACKFILL

✱ LIMIT OF SLOPING OR BENCHING OF TRENCH WALLS

UNDISTURBED GROUND

NOTES:

1. MIN .COVER TO BE BELOW FINAL STREET GRADE CONSTRUCTION OF WATER MAIN MAY NOT START UNTIL FINAL GRADE WITHIN 1 FOOT.
2. TRENCH TO BE BRACED OR SHEETED AS NECESSARY FOR THE PROTECTION OF OTHER UTILITIES AND TO MEET OSHA SAFETY REQUIREMENT.
3. TRENCH WIDTH SHALL NOT BE MORE THAN 16" NOR LESS THAN 12" WIDER THAN THE LARGEST OUTSIDE DIAMETER OF THE PIPE LAID THEREIN (BELL OR COUPLING O.D. IF APPLICABLE). REFER TO SHEET W4.1 FOR DIMENSIONS.

PARKER WATER & SANITATION DISTRICT

BEDDING DETAILS

SCALE: NONE	DATE: 2/98
APPROVED: PVR, DIRECTOR OF ENGINEERING	1/16, 10/16

2016 REVISION — SHEET W4.8

PIPE BEDDING:

(a) Installation of Bedding and Pipe: After completion of the trench excavation and proper preparation of the foundation, six inches (6") of bedding material shall be placed on the trench bottom for support under the pipe. Bell holes shall be dug deep enough to provide a minimum of two inches (2") of clearance between the bell and bedding material. All pipe shall be installed in such a manner as to insure full support of the pipe barrel over its entire length. After the pipe is adjusted for line and grade, and the joint is made, the bedding material shall be carefully placed and tamped under the haunches of the pipe and in the previously dug bell holes.

Tamping is herein defined as the act of placing approved bedding material under the haunches of the pipe, paying particular attention to voids, bell holes, and sling holes. The purpose of tamping is to ensure uniform support for the pipe.

The limits of bedding shall be from six inches (6") below the bottom of the pipe to twelve inches (12") above the top of the pipe. Approved backfill may then be installed to the groundline. See Chapter 2 of these Standards for backfill and compaction of backfill.

Compaction of bedding is not required. The only requirement is sufficient tamping to achieve uniform support under the pipe. See Sheet W4.1 of the Standard Details for a typical trench cross section.

(b) Bedding Material: The bedding material shall be a clean well-graded sand or squeegee sand and shall conform to the following limits when tested by means of laboratory sieves:

Well-Graded Sand for (24-inch or large diameter)

Sieve Size	Total Percent Passing by Weight
3/8 inch	100
No. 4	70-100
No. 8	36-93
No. 16	20-80
No. 30	8-65
No. 50	2-30
No. 100	1-10
No. 200	0-3

Squeegee Sand
for use with 20-inch or smaller

Sieve Size	Total Percent Passing by Weight
3/8 inch	100
No. 200	0-3

If approved by the District, fines form the trench walls and spoils pile may be used to provide uniform support for the pipe. No rock or stone larger than that allowed by the sieve analysis, or any other detrimental substance, shall be placed closer to the pipe than six inches (6"). Approved bedding materials shall be stockpiled on the jobsite to be used in the event natural materials become unsatisfactory. The District reserves the right to require the use of the specified bedding material at any time.

PARKER WATER & SANITATION DISTRICT

PIPE BEDDING

SCALE: NONE	DATE: 2/98
APPROVED: PVR, DIRECTOR OF ENGINEERING	5/98, 2/00, 1/16, 10/16

2016 REVISION — SHEET W4.2

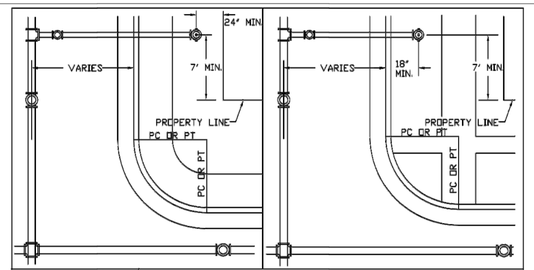

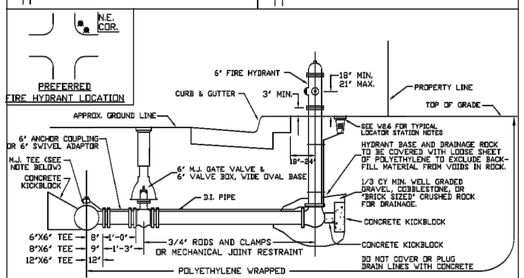

NOTES:

1. ALTERNATE TO THE ABOVE: FASTEN M.J. VALVE DIRECTLY TO A M.J. ANCHOR TEE (ALSO CALLED SWIVEL TEE)
2. NO HORIZONTAL OR VERTICAL BENDS ARE ALLOWED IN FIRE HYDRANT BRANCH
4. NO PORTION OF FIRE HYDRANT MAY BE WITHIN THE SIDEWALK AREA.
5. FIRE HYDRANT EXTENSIONS MAY NOT BE USED WITHOUT PRIOR DISTRICT APPROVAL.

PARKER WATER & SANITATION DISTRICT

FIRE HYDRANTS LOCATION & INSTALLATION

SCALE: NONE	DATE: 2/98
APPROVED: PVR, DIRECTOR OF ENGINEERING	4/01, 10/16, 01/02, 12/07, 1/16

2016 REVISION — SHEET W2.5

PIPE LOCATION SYSTEM

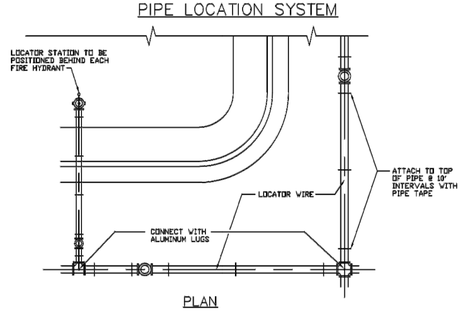

PLAN

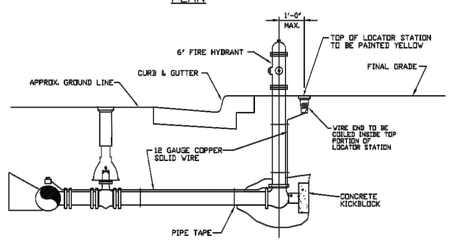

SECTION VIEW @ FIRE HYDRANT

NOTES:

1. FOR USE ON ALL DUCTILE IRON AND PVC WATER MAINS.
2. LOCATOR STATION POSITION MAY BE MODIFIED AT THE DIRECTION OF THE DISTRICT ENGINEER.
3. A CONTINUITY TEST WILL BE REQUIRED PRIOR TO PROBATIONARY ACCEPTANCE.

PARKER WATER & SANITATION DISTRICT

LOCATOR WIRE DETAILS

SCALE: NONE	DATE: 2/98
APPROVED: PVR, DIRECTOR OF ENGINEERING	4/01, 01/02, 01/16, 10/16

2016 REVISION — SHEET W2.6

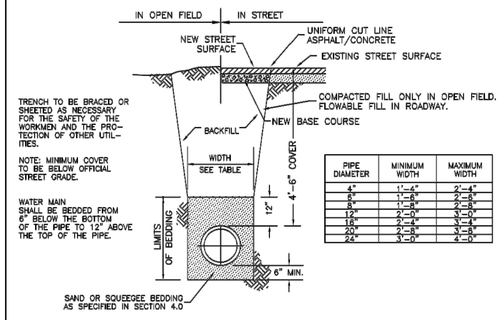

TRENCH TO BE BRACED OR SHEETED AS NECESSARY FOR THE SAFETY OF THE WORKMEN AND THE PROTECTION OF OTHER UTILITIES.

NOTE: MINIMUM COVER TO BE BELOW OFFICIAL STREET GRADE.

WATER MAIN SHALL BE BEDDED FROM 6" BELOW THE BOTTOM OF THE PIPE TO 12" ABOVE THE TOP OF THE PIPE.

PIPE DIAMETER	MINIMUM WIDTH	MAXIMUM WIDTH
4"	1'-4"	2'-4"
6"	1'-6"	2'-6"
8"	1'-8"	2'-8"
12"	2'-0"	3'-0"
16"	2'-4"	3'-4"
20"	2'-8"	3'-8"
24"	3'-0"	4'-0"

STANDARD TRENCH SECTION

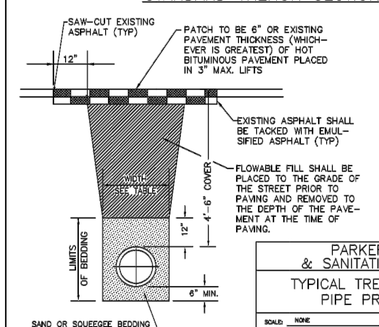

STREET CUT PATCH

PARKER WATER & SANITATION DISTRICT

TYPICAL TRENCH SECTION PIPE PROTECTION

SCALE: NONE	DATE: 2/98
APPROVED: PVR, DIRECTOR OF ENGINEERING	1/16, 10/16

2016 REVISION — SHEET W4.1

PERCEPTION DESIGN GROUP, INC.
6901 SOUTH PIERCE STREET, SUITE 315, LITTLETON, CO 80128 303-232-8868
WWW.PERCEPTIONDESIGNGROUP.COM

PREPARED UNDER THE DIRECT SUPERVISION OF JERRY W. DAVIDSON, P.E. COLORADO REG # 30226 FOR AND ON BEHALF OF PERCEPTION DESIGN GROUP, INC.

DATE	DESCRIPTION
08/31/18	FOURTH SUBMITTAL
05/25/18	THIRD SUBMITTAL
03/19/18	PWSD SUBMITTAL
02/28/18	SECOND SUBMITTAL
10/24/17	INITIAL SUBMITTAL

REVISIONS

WATER DETAILS

PARKER POINTE
LOTS 1 THRU 15 AND TRACTS A AND B, PARKER POINTE FILING NO. 1
SOUTHEAST CORNER PARKER ROAD AND STROH ROAD
PARKER, COLORADO

design by:	JWD
approved by:	JWD
project no.:	2015-015
date:	10/01/17

SHEET C7.92

\\PDG-NAS\PUBLIC\PROJECTS\2015-015 PARKER AND STROH\DWG\WATER AND SANITARY PLANS\2015-015 CDS - SAN & WAT DETLS.DWG 8/31/2018 2:12 PM

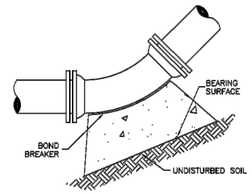

11-1/4°,22-1/2°,45° & 90° BENDS

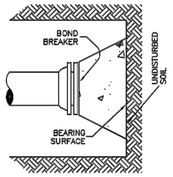

DEAD END

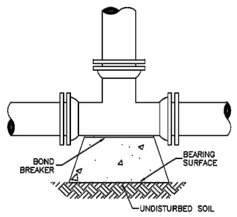

TEE

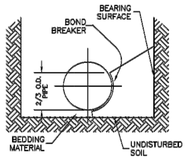

TYPICAL CROSS SECTION

MINIMUM BEARING SURFACE AREA
(IN SQUARE FEET)

SIZE OF PIPE	BENDS				TEE OR DEAD END
	11-1/4°	22-1/2°	45°	90°	
4"	1.00	1.00	1.00	1.80	1.50
6"	1.00	1.25	2.25	4.00	3.00
8"	1.00	2.00	4.00	7.50	5.25
12"	2.00	4.25	8.25	15.25	11.00
16"	3.50	6.50	12.50	23.00	16.50
20"	5.00	10.00	19.50	35.50	25.00
24"	6.50	13.00	26.00	47.00	33.00

NOTES:

1. ALL VALVES, TEES, BENDS AND PLUGS SHALL BE RESTRAINED AND KICKBLOCKED.
2. BEARING SURFACES SHOWN IN CHART ARE MINIMUM.
3. BASED ON 150 PSI PIPE PRESSURE PLUS WATER HAMMER:
   4", 6" AND 8" WATER HAMMER = 120 PSI.
   12" WATER HAMMER = 110 PSI
   16", 20" AND 24" WATER HAMMER = 70 PSI.
4. SOIL BEARING CAPACITY = 3,000 LBS./SQ. FT.

PARKER WATER & SANITATION DISTRICT

CONCRETE KICKBLOCKS
BEARING SURFACES AND INSTALLATION

SCALE: NONE | DATE: 2/96
APPROVED: PVR, DIRECTOR OF ENGINEERING | 4/01, 1/16, 10/16

2016 REVISION | SHEET W3.18

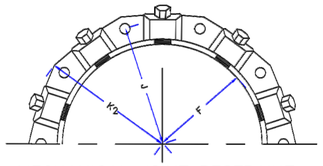

MECHANICAL JOINT RESTRAINT

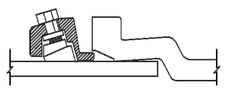

WEDGE DETAIL

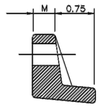

BOLT HOLE DETAIL

	NOMINAL PIPE SIZE	NO. OF BOLTS	NO. OF WEDGES	K2 INCHES	J INCHES	F INCHES	M INCHES	
PVC	4"	2	2					PVC
	6"	6	3	11.12	9.5	7.00	0.88	
	8"	6	4	13.37	11.75	9.15	1.00	
	10"	8	5	15.62	14.00	11.20	1.00	
	12"	8	8	17.88	16.25	13.30	1.25	
DI	4"	4	2					DI
	6"	6	3	11.12	9.5	7.00	0.88	
	8"	6	4	13.37	11.75	9.15	1.00	
	10"	8	5	15.62	14.00	11.20	1.00	
	12"	8	8	17.88	16.25	13.30	1.25	

NOTES:

1. DIMENSIONS FOR 16" AND 20" D.I. PIPE NOT SHOWN.

PARKER WATER & SANITATION DISTRICT

MECHANICAL JOINT RESTRAINT DETAILS

SCALE: NONE | DATE: 2/96
APPROVED: PVR, DIRECTOR OF ENGINEERING | 2/00, 12/07, 1/16, 10/16

2016 REVISION | SHEET W3.17

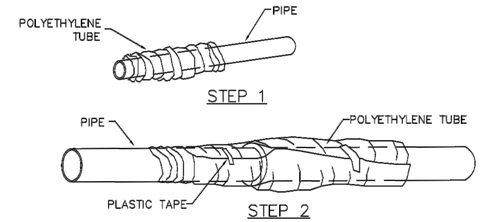

FIELD INSTALLATION – POLYETHYLENE WRAP

STEP 1 – PLACE TUBE OF POLYETHYLENE MATERIAL ON PIPE PRIOR TO LOWERING IT INTO TRENCH.

STEP 2 – PULL THE TUBE OVER THE LENGTH OF THE PIPE. TAPE TUBE TO PIPE AT JOINT. FOLD MATERIAL AROUND THE ADJACENT SPIGOT END AND WRAP WITH TAPE TO HOLD THE PLASTIC TUBE IN PLACE.

STEP 3 – OVERLAP FIRST TUBE WITH ADJACENT TUBE AND SECURE WITH PLASTIC ADHESIVE TAPE. THE POLYETHYLENE TUBE MATERIAL COVERING THE PIPE SHALL BE LOOSE. EXCESS MATERIAL SHALL BE NEATLY DRAWN UP AROUND THE PIPE BARREL, FOLDED ON TOP OF PIPE AND TAPED IN PLACE.

PARKER WATER & SANITATION DISTRICT

POLYETHYLENE WRAP

SCALE: NONE | DATE: 2/96
APPROVED: PVR, DIRECTOR OF ENGINEERING | 1/16, 10/16

2016 REVISION | SHEET W4.11

LENGTH OF TIED PIPE

PIPE SIZE	4" D	4" L	4" G	6" D	6" L	6" G	8" D	8" L	8" G	12" D	12" L	12" G	16" D	16" L	16" G	20" D	20" L	20" G	24" D	24" L	24" G
TEE OR VALVE	3/4"	6.0'	M.S.	3/4"	13.0'	M.S.	3/4"	20.0'	M.S.	3/4"	40.0'	M.S.	3/4"	60.0'	M.S.	1"	80.0'	M.S.	–	155.0'	–
PLUG OR 90° BEND	3/4"	6.0'	M.S.	3/4"	13.0'	M.S.	3/4"	20.0'	M.S.	3/4"	40.0'	M.S.	3/4"	60.0'	M.S.	1"	80.0'	M.S.	–	155.0'	–
45° BEND	3/4"	2.0'	M.S.	3/4"	4.0'	M.S.	3/4"	6.0'	M.S.	3/4"	11.0'	M.S.	3/4"	18.0'	M.S.	1"	24.0'	M.S.	–	45.0'	–
22-1/2° BEND	3/4"	1.0'	M.S.	3/4"	1.0'	M.S.	3/4"	2.0'	M.S.	3/4"	3.0'	M.S.	3/4"	5.0'	M.S.	3/4"	6.0'	M.S.	–	12.0'	–
11-1/4° BEND	3/4"	0.0'	M.S.	3/4"	0.0'	M.S.	3/4"	1.0'	M.S.	3/4"	1.0'	M.S.	3/4"	1.0'	M.S.	3/4"	2.0'	M.S.	–	3.0'	–

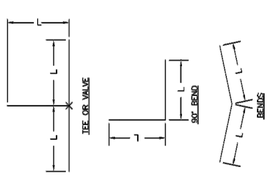

NOTES:

1. LENGTH OF TIED PIPE MEASURED EACH WAY FROM VALVES AND BENDS.
2. CLAMPS AND RODS NOT ALLOWED FOR 24" AND LARGER PIPES.
3. D = DIAMETER, L = LENGTH, G = GRADE, M.S. = MILD STEEL, H.S. = HIGH STRENGTH
4. MINIMUM 4.5' GROUND COVER REQUIRED.
5. BASED ON 150 PSI INTERNAL PRESSURE.
6. M.S. MEANS MILD STEEL ROD A.S.T.M. STANDARD DESIGNATION A-36.
7. H.S. MEANS HIGH STRENGTH ROD A.S.T.M. STANDARD DESIGNATION A-193, GRADE B7.
8. NUTS SHALL BE A.S.T.M. STANDARD DESIGNATION A-307 GRADE A OR B HEXAGON HEAVY SERIES.
9. SEE TIE ROD DETAIL DRAWING. ALSO, TIE ROD COUPLING DETAILS, CLAMP DETAILS AND SET CLAMP DETAILS.
10. LENGTH REFERS TO THE AMOUNT OF PIPE WHICH MUST BE TIED TOGETHER AND IS NOT NECESSARILY THE LENGTH OF THE RODS.
11. STAR BOLTS NOT ALLOWED ON PIPE LARGER THAN 16".
12. MINIMUM OF 4 RODS REQUIRED ON 16" PIPE IF STAR BOLTS ARE USED.
13. TEES ARE TO BE RODDED ON BRANCH ONLY.

PARKER WATER & SANITATION DISTRICT

LENGTH OF TIED PIPE

SCALE: NONE | DATE: 2/96
APPROVED: PVR, DIRECTOR OF ENGINEERING | 4/01, 1/16, 10/16

2016 REVISION | SHEET W3.11

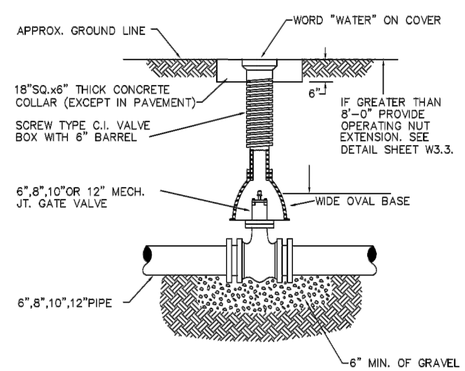

6-INCH VALVE BOXES

CHECK MATERIAL SPECIFICATIONS

NOTES:

1. ALL C.I. SHALL BE WRAPPED WITH 8 MIL. MIN. THICKNESS POLYETHYLENE.
2. VALVE NUT SHALL BE CENTERED.
3. VALVE BOX SHALL BE PLUMB.
4. SEE MATERIAL SPECIFICATIONS FOR VALVE BOX WITH GREATER THAN BURIED DEPTH OF 4.5 FT.

PARKER WATER & SANITATION DISTRICT

VALVE BOX DETAIL

SCALE: NONE | DATE: 2/96
APPROVED: PVR, DIRECTOR OF ENGINEERING | 5/98, 10/16, 6/99, 12/07, 1/16

2016 REVISION | SHEET W3.10

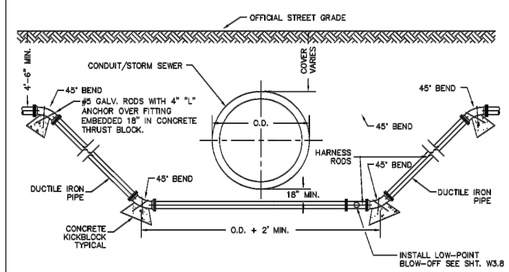

NOTES:

1. LENGTH OF EXTENSION OF PIPE AND HARNESS RODS SHALL BE IN ACCORDANCE WITH THESE ENGINEERING STANDARDS.
2. ALL WATER MAINS TWELVE (12") INCHES OR SMALLER, WHICH CROSS UNDER CONDUITS/STORM SEWER SHALL BE DUCTILE IRON OR PVC PER SPECIFICATIONS.
3. A BORED CROSSING MAY BE REQUIRED BY THE ENGINEER.
4. CONCRETE KICKBLOCKS PER SHEET W3.18.

PARKER WATER & SANITATION DISTRICT

CONDUIT OR STORM SEWER CROSSING

SCALE: NONE | DATE: 2/96
APPROVED: PVR, DIRECTOR OF ENGINEERING | 5/98, 10/16, 2/00, 12/07, 1/16

2016 REVISION | SHEET W4.6

PERCEPTION DESIGN GROUP, INC.
6901 SOUTH PIERCE STREET, SUITE 315, LITTLETON, CO 80128 303-323-8888
WWW.PERCEPTIONDESIGNGROUP.COM

PREPARED UNDER THE DIRECT SUPERVISION OF
JERRY W. DAVIDSON, P.E.
COLORADO REG # 30226
FOR AND ON BEHALF OF
PERCEPTION DESIGN GROUP, INC.

	DATE	DESCRIPTION
	08/31/18	FOURTH SUBMITTAL
	05/25/18	THIRD SUBMITTAL
	03/19/18	PWSD SUBMITTAL
	02/28/18	SECOND SUBMITTAL
	10/24/17	INITIAL SUBMITTAL
1		

REVISIONS

WATER DETAILS

PARKER POINTE
LOTS 1 THRU 15 AND TRACTS A AND B, PARKER POINTE FILING NO. 1
SOUTHEAST CORNER PARKER ROAD AND STROH ROAD
PARKER, COLORADO

design by: JWD
approved by: JWD
project no.: 2015-015
date: 10/01/17

SHEET
C7.93

\\PDG-NAS\PUBLIC\PROJECTS\2015-015 PARKER AND STROH\DWG\WATER AND SANITARY PLANS\2015-015 CDS - SAN & WAT DETLS.DWG 8/31/2018 2:11 PM

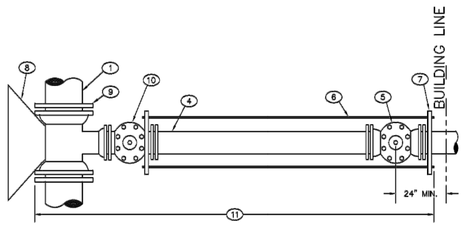

FIRE SPRINKLER OR DOMESTIC CONNECTION WITH MAIN EXTENSION

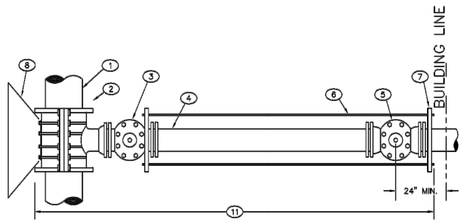

FIRE SPRINKLER OR DOMESTIC CONNECTION

1. EXISTING MAIN
2. TAPPING SLEEVE
3. TAPPING VALVE
4. DOUBLE SPIGOT PIPE
5. PROPERTY LINE VALVE
6. TIE RODS
7. PIPE CLAMP
8. CONCRETE KICKBLOCK
9. M.J. ANCHORING TEE (SWIVEL TEE)
10. M.J. VALVE
11. POLYETHYLENE WRAPPED

PARKER WATER & SANITATION DISTRICT	
3" AND LARGER DOMESTIC AND FIRE SPRINKLER CONNECTIONS	
SCALE: NONE	DATE: 2/96
APPROVED: PVR DIRECTOR OF ENGINEERING	1/16 10/16

2016 REVISION — SHEET W5.18

NOTE:
PLUG SHALL BE MECHANICALLY RESTRAINED:
A – FOR SLEEVE TYPE MACHINED COUPLING PIPE TIE BACK TO NEXT COUPLING.
B – FOR BELL AND SPIGOT PIPE TIE TO BELL.

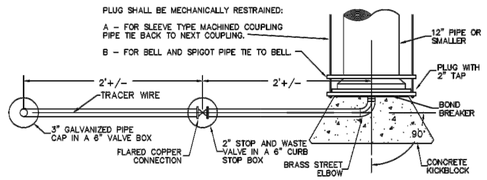

PLAN

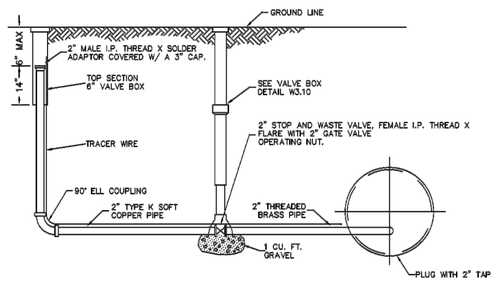

ELEVATION

PARKER WATER & SANITATION DISTRICT	
BLOW–OFF INSTALLATION FOR 12" & SMALLER PIPE	
SCALE: NONE	DATE: 2/96
APPROVED: PVR DIRECTOR OF ENGINEERING	4/01 1/16 10/16

2016 REVISION — SHEET W3.7

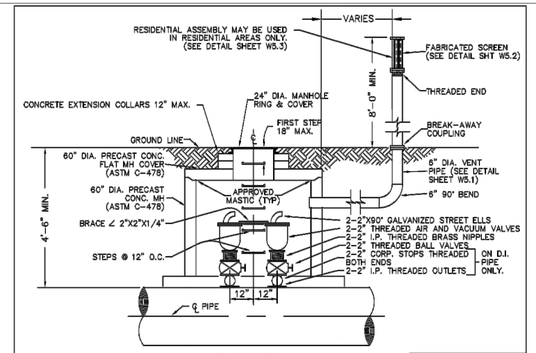

ELEVATION

NOTE:
USE 2" AIR VALVE ASSEMBLY ON 30" OR SMALLER PIPE.

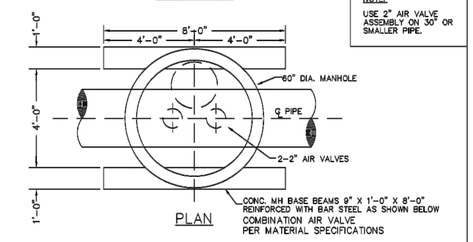

PLAN

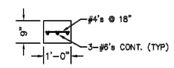

FOOTING DETAIL

PARKER WATER & SANITATION DISTRICT	
AIR AND VACUUM VALVE INSTALLATION	
SCALE: NONE	DATE: 2/96
APPROVED: PVR DIRECTOR OF ENGINEERING	4/01 1/16 10/16

2016 REVISION — SHEET W3.6

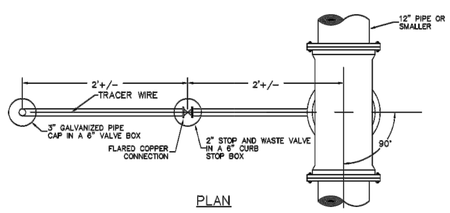

PLAN

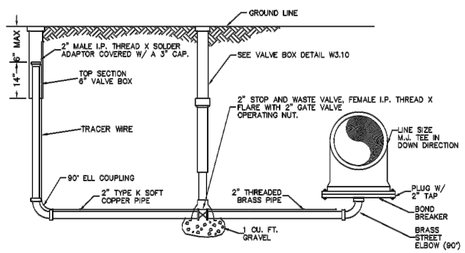

ELEVATION

NOTE: PLUG SHALL BE MECHANICALLY RESTRAINED.

PARKER WATER & SANITATION DISTRICT	
LOW POINT BLOW–OFF WITH SAND TRAP	
SCALE: NONE	DATE: 2/96
APPROVED: PVR DIRECTOR OF ENGINEERING	4/01 1/16 10/16

2016 REVISION — SHEET W3.8

PERCEPTION DESIGN GROUP, INC.
6901 SOUTH PIERCE STREET, SUITE 315, LITTLETON, CO 80128 303-232-8868
WWW.PERCEPTIONDESIGNGROUP.COM

PREPARED UNDER THE DIRECT SUPERVISION OF
JERRY W. DAVIDSON, P.E.
COLORADO REG # 30226
FOR AND ON BEHALF OF
PERCEPTION DESIGN GROUP, INC.

DATE	DESCRIPTION
08/31/18	FOURTH SUBMITTAL
05/25/18	THIRD SUBMITTAL
03/19/18	PWSD SUBMITTAL
02/28/18	SECOND SUBMITTAL
10/24/17	INITIAL SUBMITTAL

REVISIONS

WATER DETAILS

PARKER POINTE
LOTS 1 THRU 15 AND TRACTS A AND B, PARKER POINTE FILING NO. 1
SOUTHEAST CORNER PARKER ROAD AND STROH ROAD
PARKER, COLORADO

design by: JWD
approved by: JWD
project no.: 2015-015
date: 10/01/17

SHEET
C7.94

\\PDG-NAS\PUBLIC\PROJECTS\2015-015 PARKER AND STROH\DWG\WATER AND SANITARY PLANS\2015-015 CDS - SAN & WAT DETLS.DWG 8/31/2018 2:10 PM