THIS AND ANY OTHER ELECTRONIC MEDIA COUNTERPART IS AN INSTRUMENT OF SERVICE PREPARED BY MERRICK AND COMPANY FOR A DEFINED PROJECT. IT IS NOT INTENDED OR REPRESENTED TO BE SUITABLE FOR REUSE IN WHOLE OR IN PART ON EXTENSIONS OF THE PROJECT OR ON ANY OTHER PROJECT. REUSE OR MODIFICATION, OF ANY UTILIZATION IF NOT A FINISHED INSTRUMENT, WITHOUT THE PRIOR EXPRESS WRITTEN CONSENT OF MERRICK AND COMPANY SHALL BE AT THE SOLE RISK FOR THE UNAUTHORIZED USER WITHOUT LIABILITY OR LOSS EXPOSURE TO MERRICK AND COMPANY.

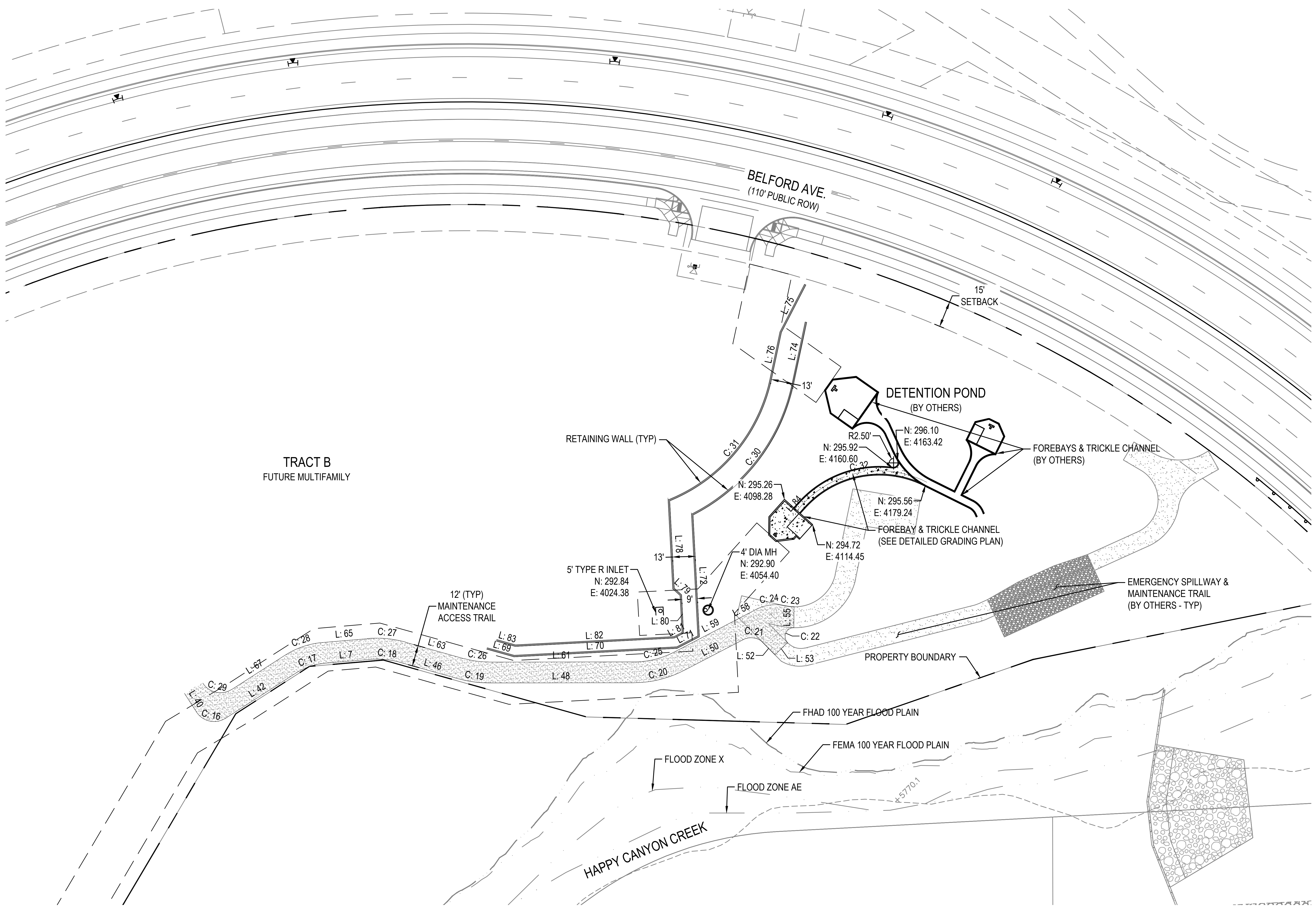
BELFORD AVE.
(110' PUBLIC ROW)
15'
SETBACK
TRACT B
FUTURE MULTIFAMILY
RETAINING WALL (TYP)
DETENTION POND
(BY OTHERS)
R2.50'
N: 296.10
E: 4163.42
N: 295.92
E: 4160.60
N: 295.26
E: 4098.28
N: 295.56
E: 4179.24
N: 294.72
E: 4114.45
FOREBAYS & TRICKLE CHANNEL
(BY OTHERS)
FOREBAY & TRICKLE CHANNEL
(SEE DETAILED GRADING PLAN)
4' DIA MH
N: 292.90
E: 4054.40
5' TYPE R INLET
N: 292.84
E: 4024.38
12' (TYP)
MAINTENANCE
ACCESS TRAIL
13'
9'
EMERGENCY SPILLWAY &
MAINTENANCE TRAIL
(BY OTHERS - TYP)
PROPERTY BOUNDARY
FHAD 100 YEAR FLOOD PLAIN
FEMA 100 YEAR FLOOD PLAIN
FLOOD ZONE X
FLOOD ZONE AE
HAPPY CANYON CREEK
5770.1
L: 7
L: 40
L: 42
L: 46
L: 48
L: 50
L: 52
L: 53
L: 55
L: 58
L: 59
L: 61
L: 63
L: 65
L: 67
L: 69
L: 70
L: 71
L: 72
L: 74
L: 75
L: 76
L: 78
L: 79
L: 80
L: 81
L: 82
L: 83
84
C: 16
C: 17
C: 18
C: 19
C: 20
C: 21
C: 22
C: 23
C: 24
C: 25
C: 26
C: 27
C: 28
C: 29
C: 30
C: 31
C: 32

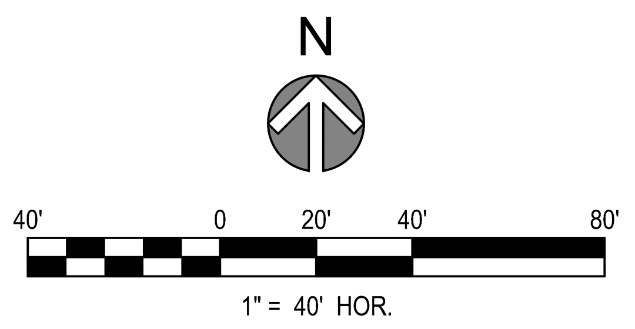
N
40'
0
20'
40'
80'
1" = 40' HOR.

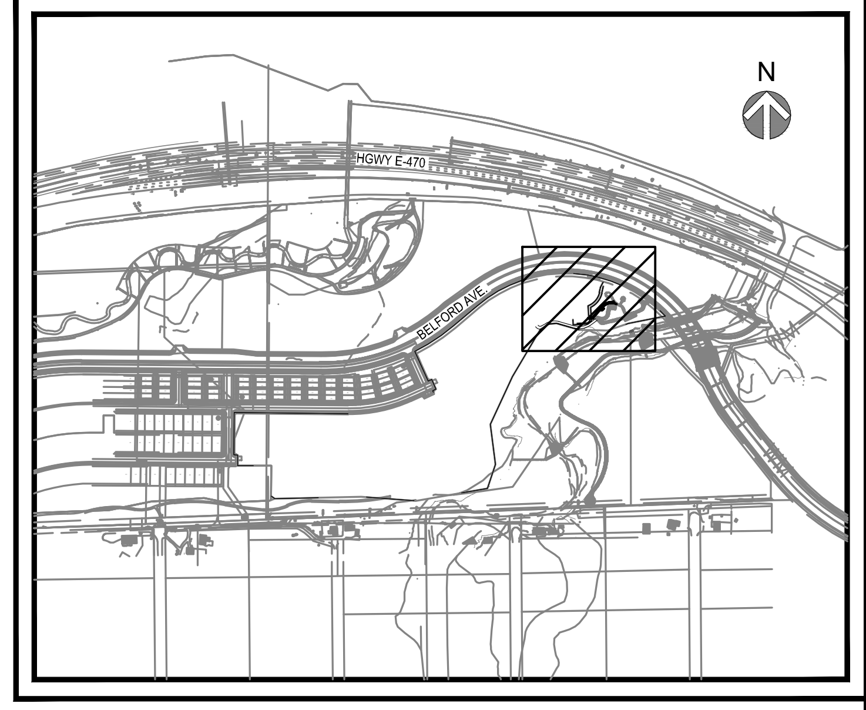

VICINITY MAP
SCALE: N.T.S.

NOTES:
1. THE FOLLOWING SHALL APPLY TO THE PROPOSED RETAINING WALL:
   1.1. LINE AND CURVE INFORMATION FROM THE FRONT FACE OF THE WALL.
   1.2. PLAN DEPICTS A 1-FOOT THICK RETAINING WALL FOR ILLUSTRATIVE PURPOSES ONLY. CONTRACTOR RESPONSIBLE FOR DESIGN OF RETAINING WALL. ALL WALLS OVER 3-FT IN EXPOSED WALL HEIGHT SHOULD BE PERMITTED THROUGH THE BUILDING DEPARTMENT.
2. NORTHINGS AND EASTINGS TRUNCATED. ALL NORTHINGS START N:1628XXX ALL EASTINGS START E:319XXX.
3. NORTHINGS AND EASTING FOR MANHOLES ARE BASED ON THE CENTER OF STRUCTURE.
4. NORTHINGS AND EASTINGS FOR INLETS ARE FROM THE FLOWLINE AT THE CENTERLINE OF THE INLET.

LINE TABLE

LINE #	BEARING	LENGTH	NORTHING	EASTING
L: 7	N85° 06' 18"E	26.00'	1627877.75	3193833.67
L: 40	S32° 42' 46"E	12.81'	1627860.53	3193753.47
L: 42	N57° 17' 14"E	48.46'	1627846.14	3193776.97
L: 46	S74° 21' 22"E	33.25'	1627877.75	3193879.28
L: 48	N89° 56' 04"E	83.72'	1627866.49	3193928.08
L: 50	N62° 33' 37"E	38.48'	1627873.56	3194040.31
L: 52	S44° 34' 01"E	10.55'	1627890.15	3194085.49
L: 53	N45° 25' 59"E	10.00'	1627882.64	3194092.89
L: 55	N0° 38' 38"E	12.00'	1627898.16	3194103.63
L: 58	S62° 33' 37"W	14.36'	1627908.56	3194081.68
L: 59	S62° 33' 37"W	38.48'	1627901.94	3194068.93
L: 61	S89° 56' 04"W	83.72'	1627878.58	3194011.79
L: 63	N74° 21' 22"W	35.27'	1627880.34	3193914.53
L: 65	S85° 06' 18"W	26.00'	1627891.92	3193858.55
L: 67	S57° 17' 14"W	36.46'	1627882.42	3193811.26
L: 69	S74° 21' 22"E	16.33'	1627885.82	3193927.17
L: 70	N87° 01' 07"E	93.86'	1627881.41	3193942.89
L: 71	N62° 33' 37"E	14.47'	1627886.30	3194036.63
L: 72	N2° 58' 53"W	70.05'	1627892.96	3194049.46
L: 74	N12° 43' 26"E	36.03'	1628038.58	3194103.16

LINE TABLE

LINE #	BEARING	LENGTH	NORTHING	EASTING
L: 75	S27° 19' 37"W	30.67'	1628095.17	3194110.67
L: 76	S11° 55' 44"W	27.35'	1628067.92	3194096.59
L: 78	S2° 58' 53"E	50.13'	1627971.05	3194032.38
L: 79	S47° 58' 53"E	5.66'	1627920.98	3194034.99
L: 80	S2° 58' 53"E	22.24'	1627917.20	3194039.19
L: 81	S62° 33' 37"W	6.01'	1627894.99	3194040.35
L: 82	S87° 01' 07"W	91.58'	1627892.22	3194035.01
L: 83	N74° 21' 22"W	11.37'	1627887.46	3193943.56
L: 84	N41° 46' 29"E	3.83'	1627965.52	3194105.50

CURVE TABLE

CURVE #	LENGTH	DELTA	RADIUS	CRD LENGTH	CRD RADIUS	NORTHING	EASTING
C: 16	18.85'	90° 00' 00"	12.00'	16.97	S77° 42' 46"E	1627849.75	3193760.39
C: 17	16.99'	27° 49' 05"	35.00'	16.83	N71° 11' 46"E	1627872.32	3193817.75
C: 18	19.95'	22° 22' 56"	51.08'	19.83	S83° 34' 49"E	1627879.97	3193859.58
C: 19	17.00'	15° 42' 34"	62.00'	16.95	S82° 12' 39"E	1627868.78	3193911.29
C: 20	29.62'	27° 22' 27"	62.00'	29.34	N76° 14' 50"E	1627866.58	3194011.81
C: 21	11.73'	66° 16' 52"	10.14'	11.09	S84° 05' 01"E	1627891.29	3194074.46
C: 22	11.80'	135° 12' 39"	5.00'	9.25	N23° 02' 18"E	1627889.65	3194100.02
C: 23	5.24'	12° 30' 59"	24.00'	5.23	N83° 05' 53"W	1627910.16	3194103.77
C: 24	17.39'	39° 51' 27"	25.00'	17.05	S82° 29' 20"W	1627910.79	3194098.57
C: 25	23.89'	27° 22' 27"	50.00'	23.66	S76° 14' 50"W	1627884.21	3194034.78
C: 26	13.71'	15° 42' 34"	50.00'	13.67	N82° 12' 39"W	1627878.49	3193928.07
C: 27	22.23'	20° 32' 20"	62.00'	22.11	N84° 37' 32"W	1627889.85	3193880.56
C: 28	22.82'	27° 49' 05"	47.00'	22.60	S71° 11' 46"W	1627889.70	3193832.65
C: 29	18.85'	90° 00' 03"	12.00'	16.97	N77° 42' 46"W	1627862.72	3193780.59
C: 30	98.28'	52° 01' 02"	108.25'	94.94	N37° 09' 31"E	1627962.92	3194045.82
C: 31	95.08'	55° 52' 16"	97.50'	91.35	S39° 51' 51"W	1628041.17	3194090.93
C: 32	78.91'	75° 21' 19"	60.00'	73.35	N79° 27' 08"E	1627968.37	3194108.05

811
Know what's below.
Call before you dig.

THE TOWN OF PARKER REVIEW CONSTITUTES GENERAL COMPLIANCE WITH THE TOWN'S STANDARDS AND APPROVED VARIANCES, SUBJECT TO THESE PLANS BEING STAMPED, SIGNED, AND DATED BY THE PROFESSIONAL ENGINEER OF RECORD. REVIEW BY THE TOWN DOES NOT CONSTITUTE APPROVAL OF THE PLAN DESIGN OR ACCURACY AND CORRECTNESS OF ENGINEERING CALCULATIONS. ERRORS IN THE DESIGN OR CALCULATIONS REMAIN THE RESPONSIBILITY OF THE REGISTERED PROFESSIONAL ENGINEER WHOSE STAMP AND SIGNATURE ARE AFFIXED TO THIS DOCUMENT.

THIS REVIEW DOES NOT CONSTITUTE APPROVAL OF ANY PRIVATE ON-SITE IMPROVEMENTS WHICH MAY BE SHOWN. CONSTRUCTION CANNOT COMMENCE UNTIL ALL REQUIRED DRAINAGE/TRAFFIC REPORT(S), FINAL DEVELOPMENT PLAN(S), SPECIAL REVIEW(S), GRADING PERMIT, AND/OR OTHER PERMITS ARE COMPLETE, APPROVED AND ON FILE WITH THE TOWN OF PARKER.

TOWN OF PARKER, PUBLIC WORKS DIRECTOR DATE

MERRICK®
Engineering / Architecture / Design-Build / Surveying / Planning / Geospatial Solutions
5970 GREENWOOD PLAZA BLVD. GREENWOOD VILLAGE, CO. 80111
303-751-0741
www.merrick.com

CENTURY
Living

REV	REVISION DESCRIPTION	DATE	CHND	CHKD	APPR

TITLE
COMPARK VILLAGE SOUTH
BELDFORD AVE SITE PLAN AMD.
SUPPLEMENTAL POND PLANS

POND - HORIZONTAL CONRTOL PLAN

PE STAMP
KRISTOFER KYLE WIEST
46080
09/08/2022
FOR AND ON BEHALF OF MERRICK & COMPANY

JOB NUMBER 65120950
DATE 3/29/22
SHEET C4.0
25

THIS AND ANY OTHER ELECTRONIC MEDIA COUNTERPART IS AN INSTRUMENT OF SERVICE PREPARED BY MERRICK AND COMPANY FOR A DEFINED PROJECT. IT IS NOT INTENDED OR REPRESENTED TO BE SUITABLE FOR REUSE IN WHOLE OR IN PART ON EXTENSIONS OF THE PROJECT OR ON ANY OTHER PROJECT. REUSE OR MODIFICATION, OF ANY UTILIZATION IF NOT A FINISHED INSTRUMENT, WITHOUT THE PRIOR EXPRESS WRITTEN CONSENT OF MERRICK AND COMPANY SHALL BE AT THE SOLE RISK FOR THE UNAUTHORIZED USER WITHOUT LIABILITY OR LOSS EXPOSURE TO MERRICK AND COMPANY.

Know what's **below.**
Call before you dig.

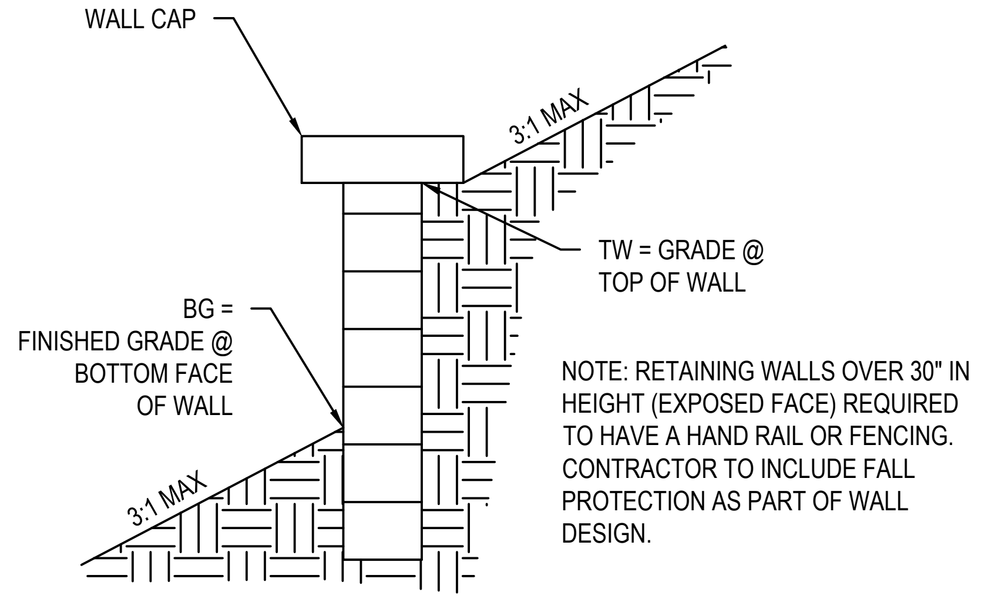

WALL CAP
3:1 MAX
TW = GRADE @ TOP OF WALL
BG = FINISHED GRADE @ BOTTOM FACE OF WALL
3:1 MAX
NOTE: RETAINING WALLS OVER 30" IN HEIGHT (EXPOSED FACE) REQUIRED TO HAVE A HAND RAIL OR FENCING. CONTRACTOR TO INCLUDE FALL PROTECTION AS PART OF WALL DESIGN.

TYPICAL WALL SECTION
NTS

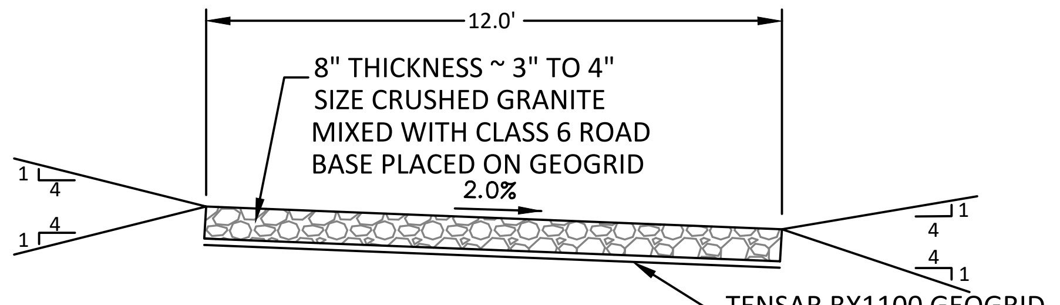

12.0'
8" THICKNESS ~ 3" TO 4" SIZE CRUSHED GRANITE MIXED WITH CLASS 6 ROAD BASE PLACED ON GEOGRID
2.0%
1
4
4
1
1
4
4
1
TENSAR BX1100 GEOGRID MIRAFI BASXGRID 11 OR APPROVED EQUAL

MAINTENANCE ACCESS ROAD
ABOVE EURV WSEL DETAIL
NTS

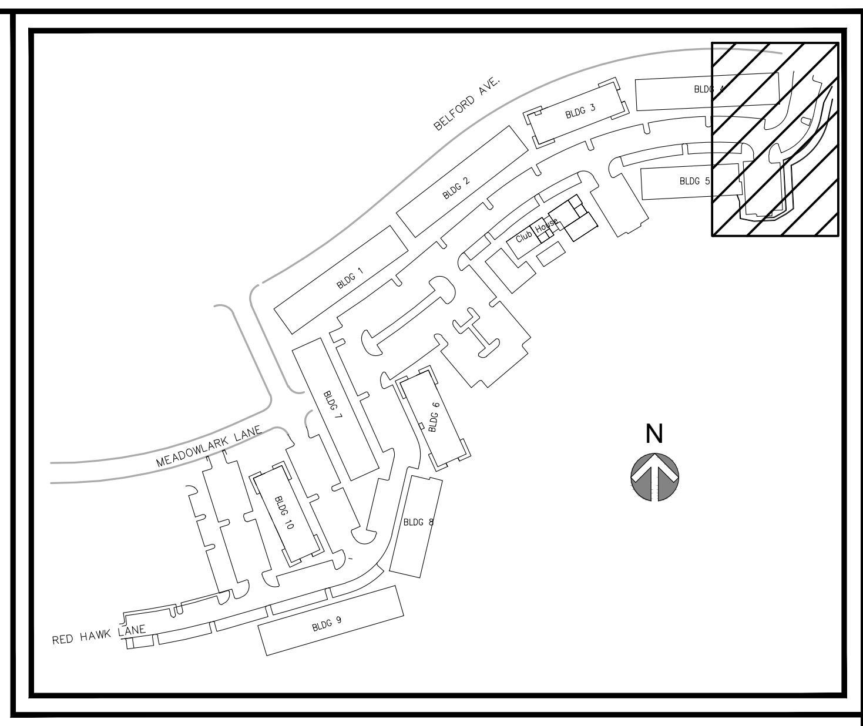

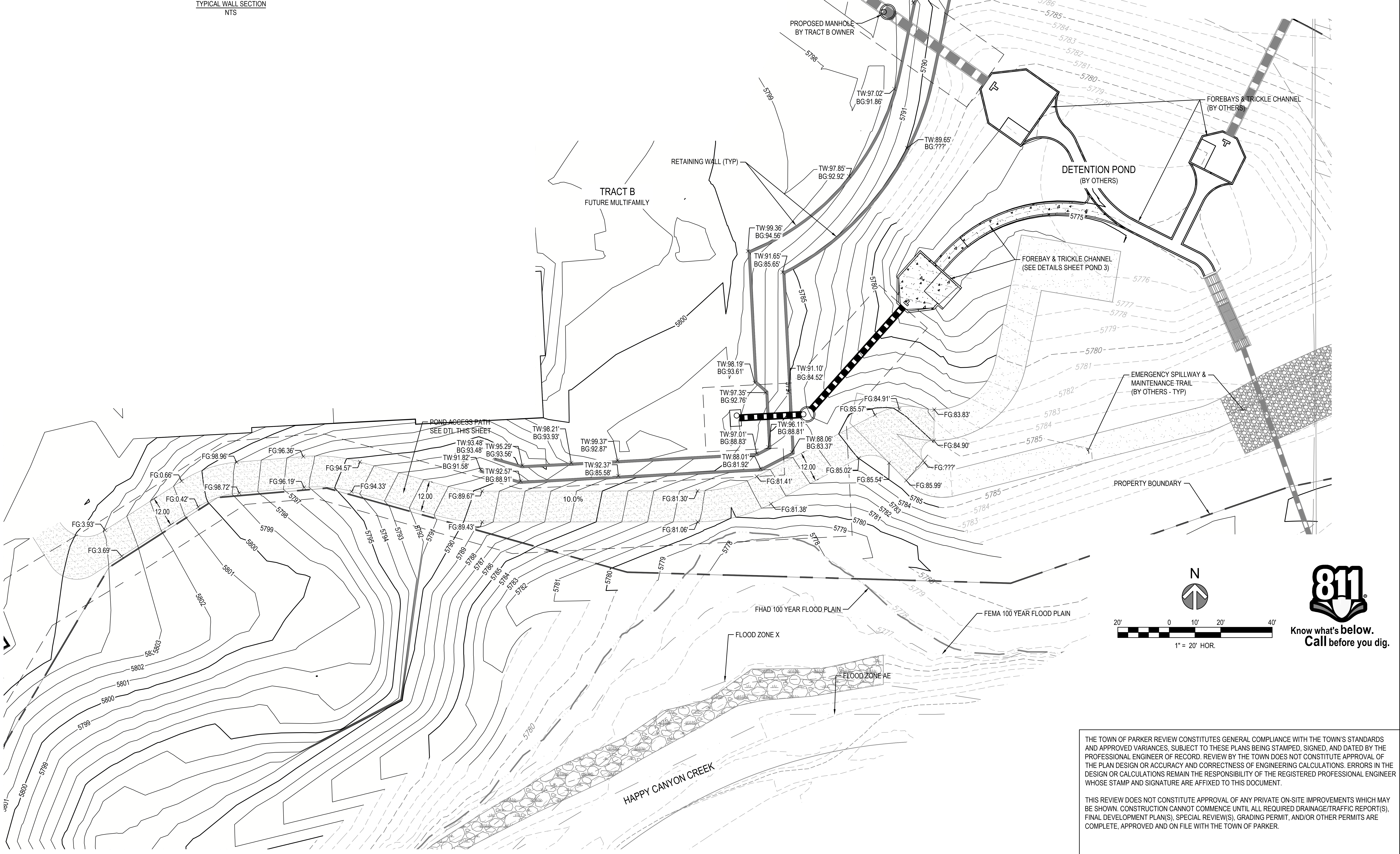

N
S
TRACT B
FUTURE MULTIFAMILY
RETAINING WALL (TYP)
PROPOSED MANHOLE BY TRACT B OWNER
TW:92.73' BG:92.54'
TW:87.20' BG:87.00'
TW:95.72' BG:91.34'
TW:97.02' BG:91.86'
TW:89.65' BG:???'
TW:97.85' BG:92.92'
TW:99.36' BG:94.56'
TW:91.65' BG:85.65'
TW:98.19' BG:93.61'
TW:91.10' BG:84.52'
TW:97.35' BG:92.76'
TW:97.01' BG:88.83'
TW:96.11' BG:88.81'
TW:88.06' BG:83.37'
TW:88.01' BG:81.92'
TW:98.21' BG:93.93'
TW:99.37' BG:92.87'
TW:93.48' BG:93.48'
TW:95.29' BG:93.56'
TW:91.82' BG:91.58'
TW:92.57' BG:88.91'
TW:92.37' BG:85.58'
POND ACCESS PATH SEE DTL THIS SHEET
FG:98.96'
FG:96.36'
FG:0.66'
FG:98.72'
FG:96.19'
FG:94.57'
FG:94.33'
FG:0.42'
FG:3.93'
FG:3.69'
12.00
12.00
12.00
10.0%
FG:89.67'
FG:89.43'
FG:81.30'
FG:81.06'
FG:81.41'
FG:81.38'
FG:84.91'
FG:85.57'
FG:83.83'
FG:84.90'
FG:???'
FG:85.02'
FG:85.54'
FG:85.99'
FOREBAYS & TRICKLE CHANNEL (BY OTHERS)
DETENTION POND (BY OTHERS)
FOREBAY & TRICKLE CHANNEL (SEE DETAILS SHEET POND 3)
EMERGENCY SPILLWAY & MAINTENANCE TRAIL (BY OTHERS - TYP)
PROPERTY BOUNDARY
FHAD 100 YEAR FLOOD PLAIN
FEMA 100 YEAR FLOOD PLAIN
FLOOD ZONE X
FLOOD ZONE AE
HAPPY CANYON CREEK
5800
5799
5798
5797
5796
5795
5794
5793
5792
5791
5790
5789
5788
5787
5786
5785
5784
5783
5782
5781
5780
5779
5778
5777
5776
5775
5801
5802
5803
N
20' 0 10' 20' 40'
1" = 20' HOR.

Know what's **below.**
Call before you dig.

THE TOWN OF PARKER REVIEW CONSTITUTES GENERAL COMPLIANCE WITH THE TOWN'S STANDARDS AND APPROVED VARIANCES, SUBJECT TO THESE PLANS BEING STAMPED, SIGNED, AND DATED BY THE PROFESSIONAL ENGINEER OF RECORD. REVIEW BY THE TOWN DOES NOT CONSTITUTE APPROVAL OF THE PLAN DESIGN OR ACCURACY AND CORRECTNESS OF ENGINEERING CALCULATIONS. ERRORS IN THE DESIGN OR CALCULATIONS REMAIN THE RESPONSIBILITY OF THE REGISTERED PROFESSIONAL ENGINEER WHOSE STAMP AND SIGNATURE ARE AFFIXED TO THIS DOCUMENT.

THIS REVIEW DOES NOT CONSTITUTE APPROVAL OF ANY PRIVATE ON-SITE IMPROVEMENTS WHICH MAY BE SHOWN. CONSTRUCTION CANNOT COMMENCE UNTIL ALL REQUIRED DRAINAGE/TRAFFIC REPORT(S), FINAL DEVELOPMENT PLAN(S), SPECIAL REVIEW(S), GRADING PERMIT, AND/OR OTHER PERMITS ARE COMPLETE, APPROVED AND ON FILE WITH THE TOWN OF PARKER.

TOWN OF PARKER, DIRECTOR OF ENGINEERING　　　DATE

Know what's **below.**
Call before you dig.

File Location:Q:\DEN\Projects\0950-00 Compark South\CAD\CDs\Tract G Pond\0950-GRD.dwg Plot Date:9/12/2022 4:06 PM Last Saved By: KBLACK

MERRICK®
Engineering | Architecture | Design-Build | Surveying | Planning | Geospatial Solutions
5970 GREENWOOD PLAZA BLVD. GREENWOOD VILLAGE, CO. 80111
303-751-0741
www.merrick.com

CENTURY
— LIVING —

REV	REVISION DESCRIPTION	DATE	CHND	CHKD	APPR

TITLE

COMPARK VILLAGE SOUTH
PRIVATE IMPROVEMENT CONSTRUCTION PLANS

POND - DETAILED GRADING

PE STAMP
46080
09/08/2022
KRISTOFFER KYLE WIEST
FOR AND ON BEHALF OF MERRICK & COMPANY

JOB NUMBER
65120950

DATE
7/1/2022

SHEET
C4.1

26

THIS AND ANY OTHER ELECTRONIC MEDIA COUNTERPART IS AN INSTRUMENT OF SERVICE PREPARED BY MERRICK AND COMPANY FOR A DEFINED PROJECT. IT IS NOT INTENDED OR REPRESENTED TO BE SUITABLE FOR REUSE IN WHOLE OR IN PART ON EXTENSIONS OF THE PROJECT OR ON ANY OTHER PROJECT. REUSE OR MODIFICATION, OF ANY UTILIZATION IF NOT A FINISHED INSTRUMENT, WITHOUT THE PRIOR EXPRESS WRITTEN CONSENT OF MERRICK AND COMPANY SHALL BE AT THE SOLE RISK FOR THE UNAUTHORIZED USER WITHOUT LIABILITY OR LOSS EXPOSURE TO MERRICK AND COMPANY.

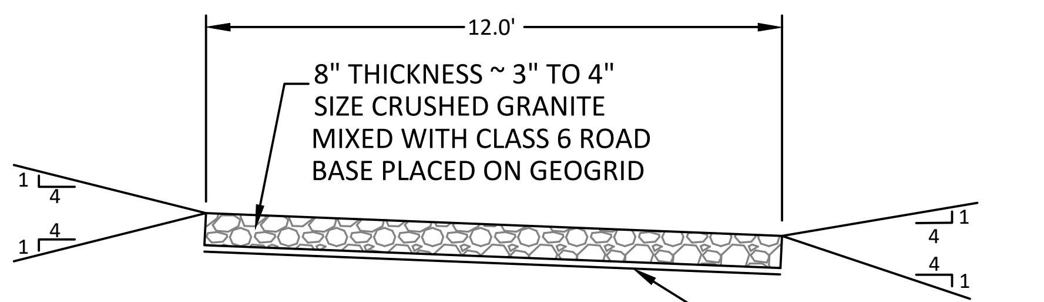
12.0'
8" THICKNESS ~ 3" TO 4" SIZE CRUSHED GRANITE MIXED WITH CLASS 6 ROAD BASE PLACED ON GEOGRID
1
4
1
4
TENSAR BX1100 GEOGRID MIRAFI BASXGRID 11 OR APPROVED EQUAL

MAINTENANCE ACCESS ROAD ABOVE EURV WSEL DETAIL
NTS

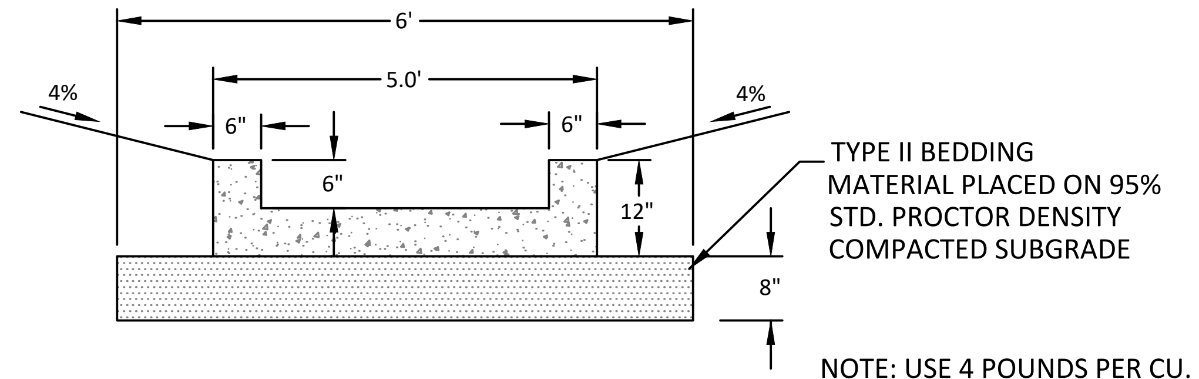
6'
5.0'
4%
4%
6"
6"
6"
12"
8"
TYPE II BEDDING MATERIAL PLACED ON 95% STD. PROCTOR DENSITY COMPACTED SUBGRADE

5.0' WIDE TRICKLE CHANNEL DETAIL
NTS

NOTE: USE 4 POUNDS PER CU. YD. OF FIBRE MESH TO REINFORCE CONCRETE

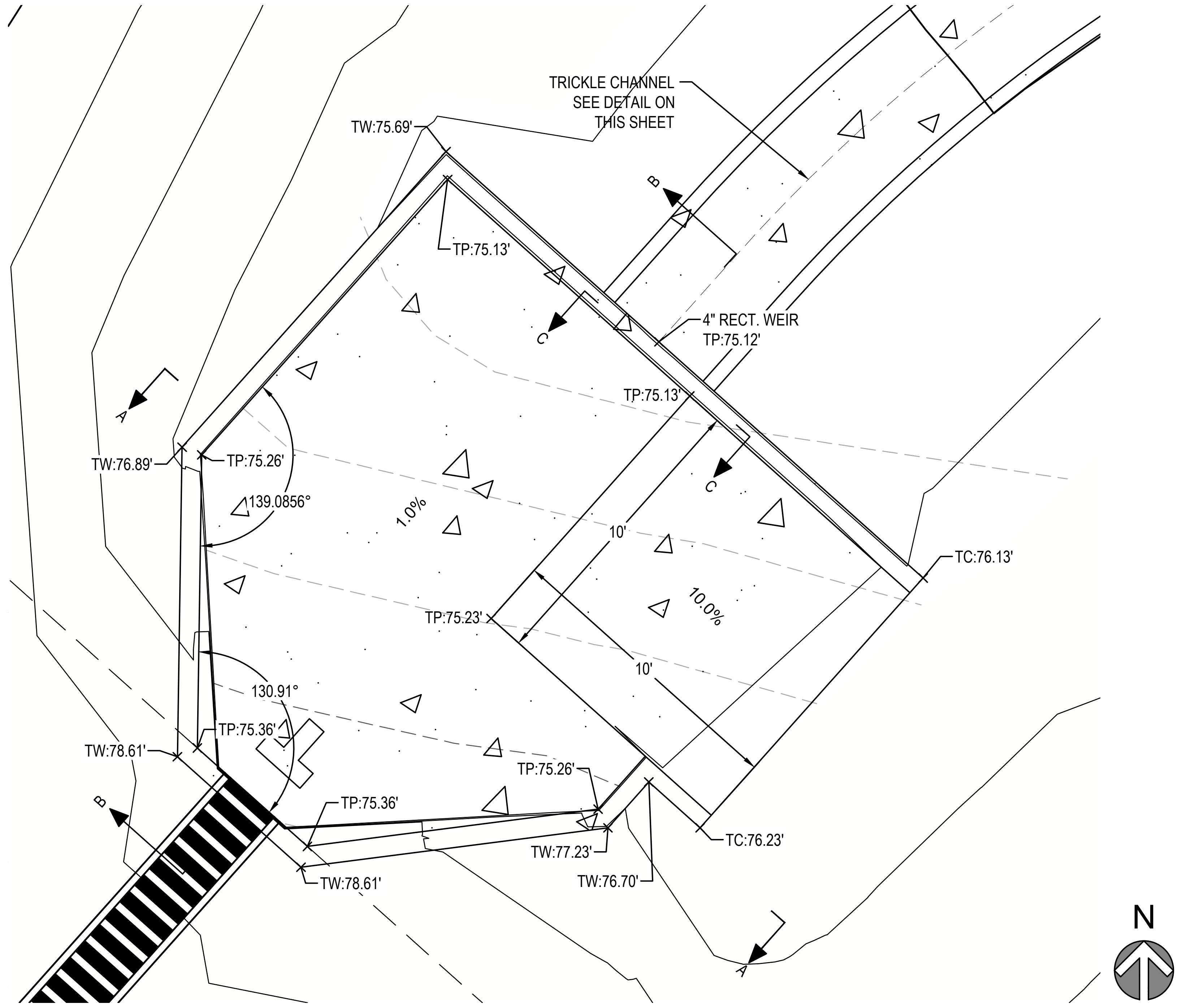
TRICKLE CHANNEL SEE DETAIL ON THIS SHEET
TW:75.69'
TP:75.13'
B
C
4" RECT. WEIR TP:75.12'
TP:75.13'
A
TW:76.89'
TP:75.26'
139.0856°
1.0%
C
10'
TC:76.13'
TP:75.23'
10.0%
10'
130.91°
TW:78.61'
TP:75.36'
TP:75.26'
B
TP:75.36'
TW:77.23'
TC:76.23'
TW:78.61'
TW:76.70'
A
N

FOREBAY DETAIL
SCALE: 1" = 4'

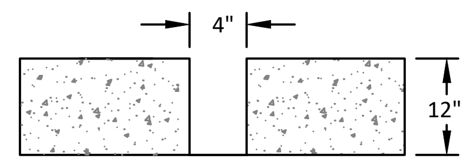

SECTION C-C FOREBAY NOTCH
NTS

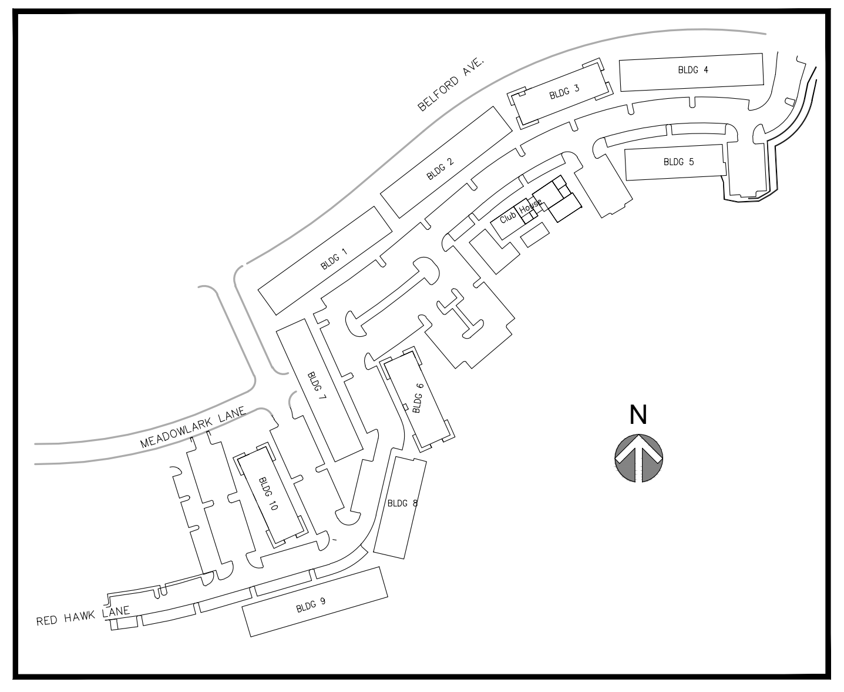

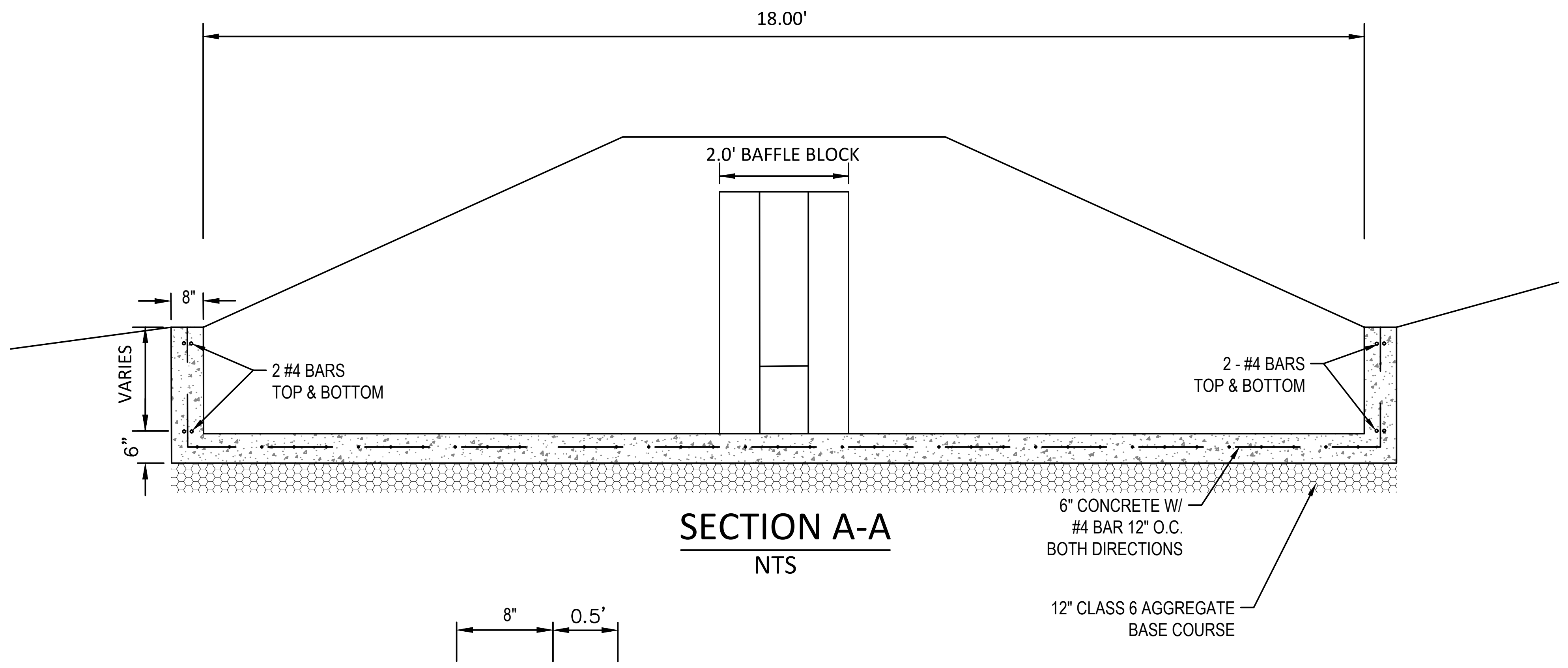
18.00'
2.0' BAFFLE BLOCK
8"
VARIES
6"
2 #4 BARS TOP & BOTTOM
2 - #4 BARS TOP & BOTTOM
6" CONCRETE W/ #4 BAR 12" O.C. BOTH DIRECTIONS
12" CLASS 6 AGGREGATE BASE COURSE

SECTION A-A
NTS

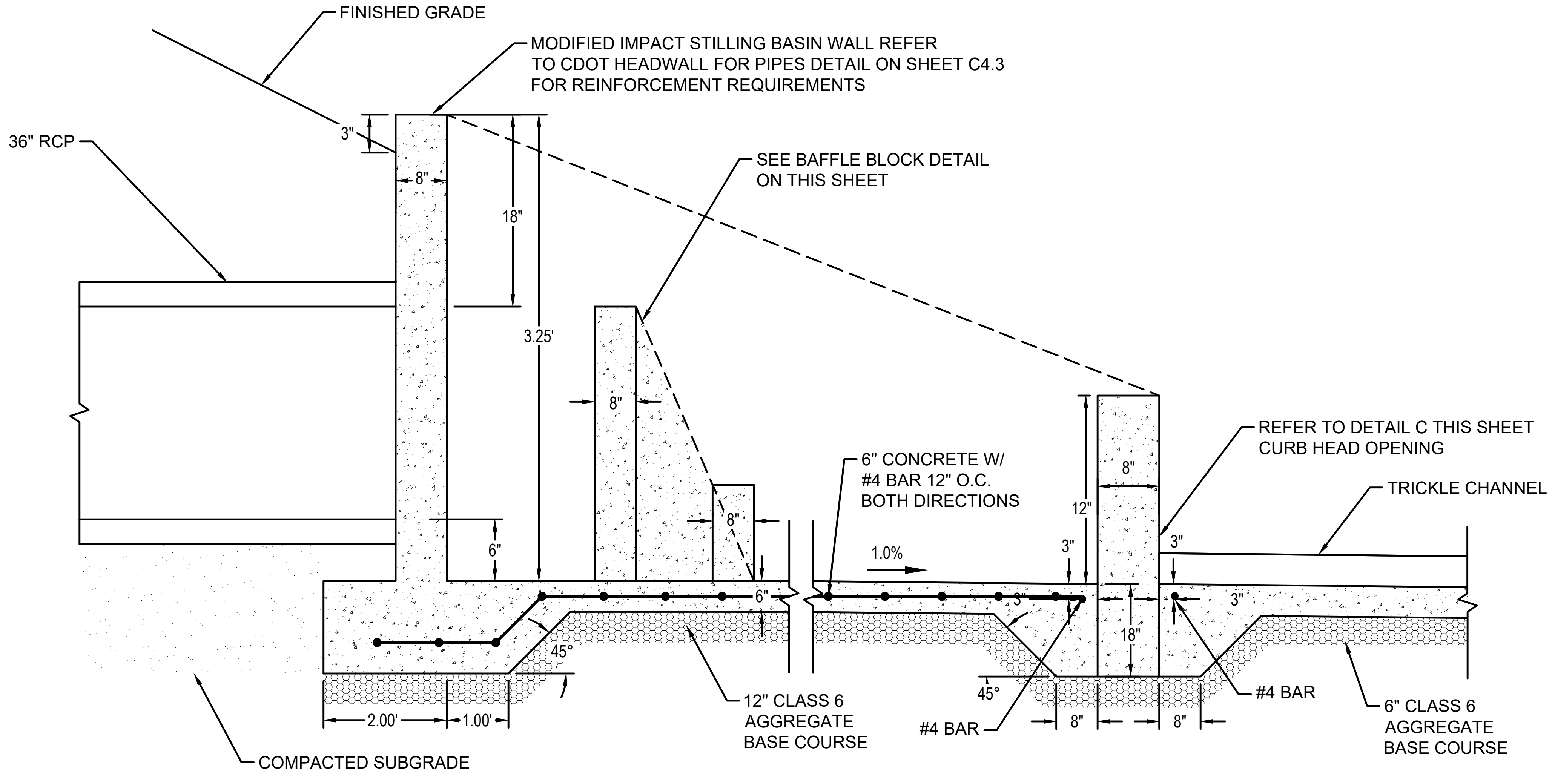
FINISHED GRADE
MODIFIED IMPACT STILLING BASIN WALL REFER TO CDOT HEADWALL FOR PIPES DETAIL ON SHEET C4.3 FOR REINFORCEMENT REQUIREMENTS
36" RCP
3"
8"
18"
SEE BAFFLE BLOCK DETAIL ON THIS SHEET
3.25'
8"
8"
6"
6" CONCRETE W/ #4 BAR 12" O.C. BOTH DIRECTIONS
1.0%
12"
3"
8"
REFER TO DETAIL C THIS SHEET CURB HEAD OPENING
TRICKLE CHANNEL
3"
3"
6"
45°
18"
2.00'
1.00'
12" CLASS 6 AGGREGATE BASE COURSE
45°
#4 BAR
8"
8"
#4 BAR
6" CLASS 6 AGGREGATE BASE COURSE
COMPACTED SUBGRADE

SECTION B-B FOREBAY DETAIL
N.T.S.

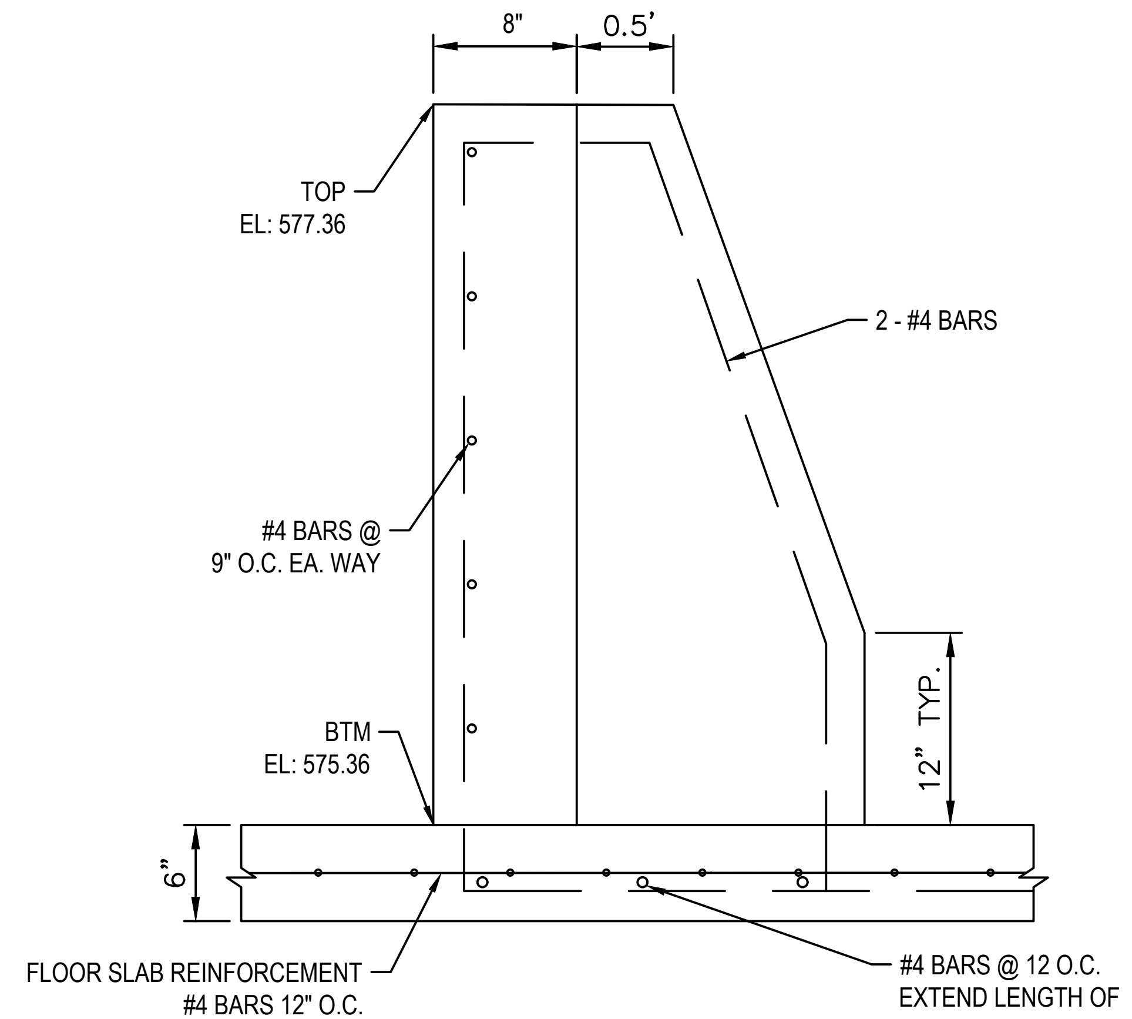
8"
0.5'
TOP EL: 577.36
2 - #4 BARS
#4 BARS @ 9" O.C. EA. WAY
BTM EL: 575.36
12" TYP.
6"
FLOOR SLAB REINFORCEMENT #4 BARS 12" O.C.
#4 BARS @ 12 O.C. EXTEND LENGTH OF BAFFLE FACE

BAFFLE BLOCK REINFORCING DETAIL
NTS

Know what's **below.**
Call before you dig.

File Location:Q:\DEN\Projects\0950-00 Compark South\CAD\CDs\Tract G Pond\0950-GRD.dwg Plot Date:9/12/2022 4:06 PM Last Saved By: KBLACK

THE TOWN OF PARKER REVIEW CONSTITUTES GENERAL COMPLIANCE WITH THE TOWN'S STANDARDS AND APPROVED VARIANCES, SUBJECT TO THESE PLANS BEING STAMPED, SIGNED, AND DATED BY THE PROFESSIONAL ENGINEER OF RECORD. REVIEW BY THE TOWN DOES NOT CONSTITUTE APPROVAL OF THE PLAN DESIGN OR ACCURACY AND CORRECTNESS OF ENGINEERING CALCULATIONS. ERRORS IN THE DESIGN OR CALCULATIONS REMAIN THE RESPONSIBILITY OF THE REGISTERED PROFESSIONAL ENGINEER WHOSE STAMP AND SIGNATURE ARE AFFIXED TO THIS DOCUMENT.

THIS REVIEW DOES NOT CONSTITUTE APPROVAL OF ANY PRIVATE ON-SITE IMPROVEMENTS WHICH MAY BE SHOWN. CONSTRUCTION CANNOT COMMENCE UNTIL ALL REQUIRED DRAINAGE/TRAFFIC REPORT(S), FINAL DEVELOPMENT PLAN(S), SPECIAL REVIEW(S), GRADING PERMIT, AND/OR OTHER PERMITS ARE COMPLETE, APPROVED AND ON FILE WITH THE TOWN OF PARKER.

TOWN OF PARKER, DIRECTOR OF ENGINEERING DATE

MERRICK®
Engineering | Architecture | Design-Build | Surveying | Planning | Geospatial Solutions
5970 GREENWOOD PLAZA BLVD. GREENWOOD VILLAGE, CO. 80111
303-751-0741
www.merrick.com

CENTURY
— LIVING —

REV	REVISION DESCRIPTION	DATE	CHND	CHKD	APPR

TITLE
COMPARK VILLAGE SOUTH
PRIVATE IMPROVEMENT CONSTRUCTION PLANS
POND - GRADING DETAILS

PE STAMP
46080
09/08/2022
FOR AND ON BEHALF OF MERRICK & COMPANY

JOB NUMBER 65120950
DATE 7/1/2022
SHEET C4.2
27

THIS AND ANY OTHER ELECTRONIC MEDIA COUNTERPART IS AN INSTRUMENT OF SERVICE PREPARED BY MERRICK AND COMPANY FOR A DEFINED PROJECT. IT IS NOT INTENDED OR REPRESENTED TO BE SUITABLE FOR REUSE IN WHOLE OR IN PART ON EXTENSIONS OF THE PROJECT OR ON ANY OTHER PROJECT. REUSE OR MODIFICATION, OF ANY UTILIZATION IF NOT A FINISHED INSTRUMENT, WITHOUT THE PRIOR EXPRESS WRITTEN CONSENT OF MERRICK AND COMPANY SHALL BE AT THE SOLE RISK FOR THE UNAUTHORIZED USER WITHOUT LIABILITY OR LOSS EXPOSURE TO MERRICK AND COMPANY.

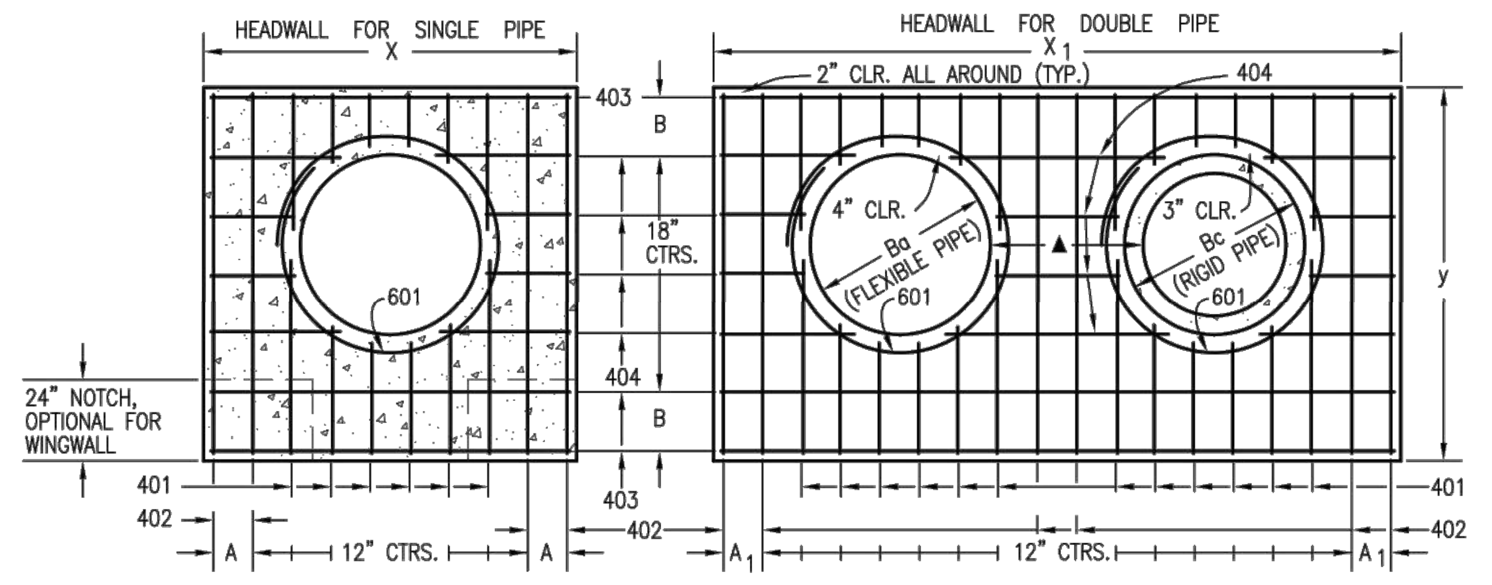
HEADWALL FOR SINGLE PIPE
X
403
B
18" CTRS.
601
404
24" NOTCH, OPTIONAL FOR WINGWALL
401
402
A
12" CTRS.
HEADWALL FOR DOUBLE PIPE
X1
2" CLR. ALL AROUND (TYP.)
4" CLR.
Ba (FLEXIBLE PIPE)
3" CLR.
Bc (RIGID PIPE)
y
A1

TYPICAL BAR LAYOUT FOR CONCRETE HEADWALLS

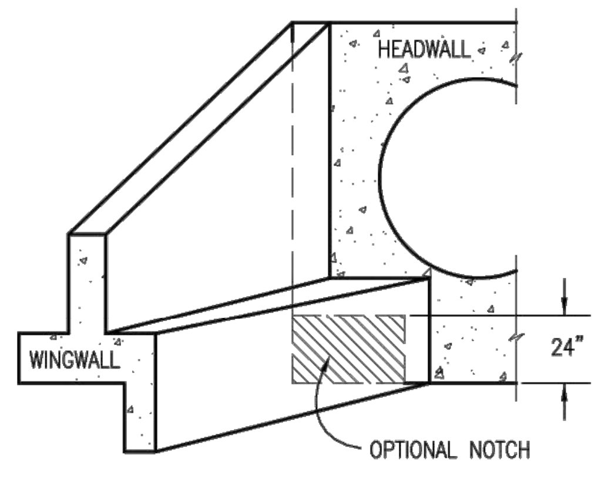
HEADWALL
WINGWALL
24"
OPTIONAL NOTCH

FRONT VIEW

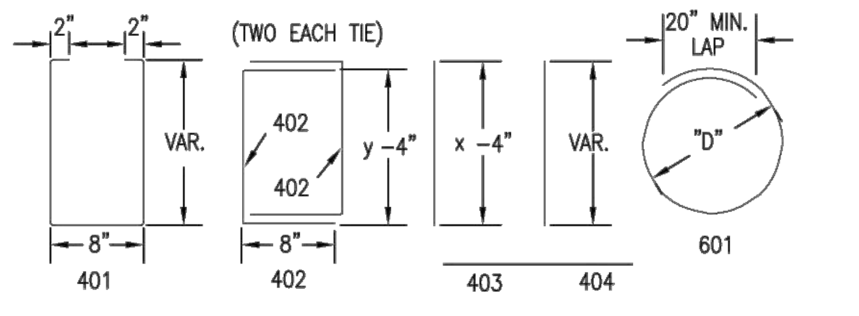
2"
2"
(TWO EACH TIE)
VAR.
402
y −4"
x −4"
20" MIN. LAP
"D"
8"
401
402
403
404
601

"D" =
RIGID PIPE = Bc + 6"
FLEXIBLE PIPE = Ba + 8"
FLEXIBLE ARCH = SPAN + 8"
STRUCTURAL PLATE ARCH = RISE + 8"

BAR BENDING

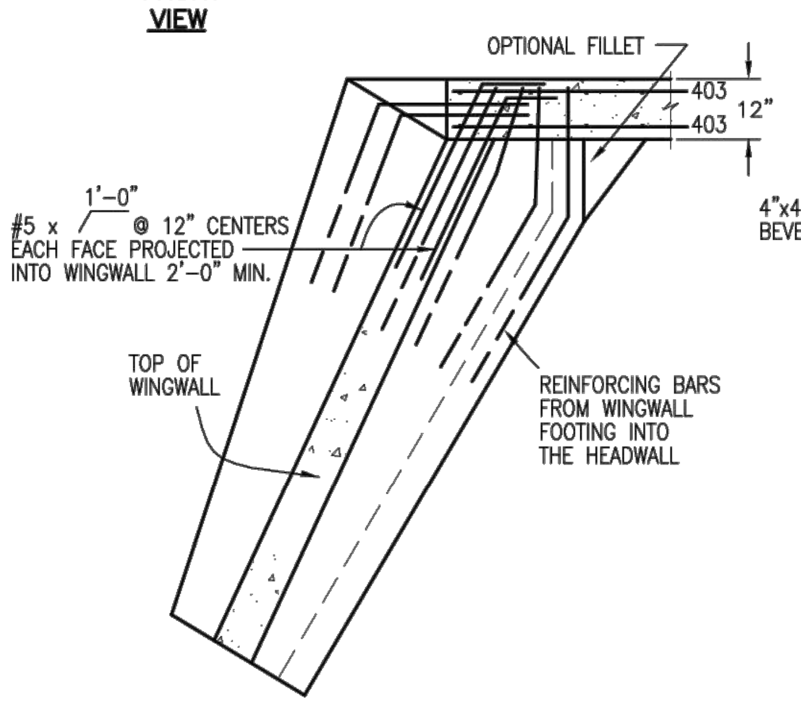
OPTIONAL FILLET
403
403
12"
1'−0"
#5 x @ 12" CENTERS EACH FACE PROJECTED INTO WINGWALL 2'−0" MIN.
TOP OF WINGWALL
REINFORCING BARS FROM WINGWALL FOOTING INTO THE HEADWALL

TOP VIEW

WINGWALL CONNECTION

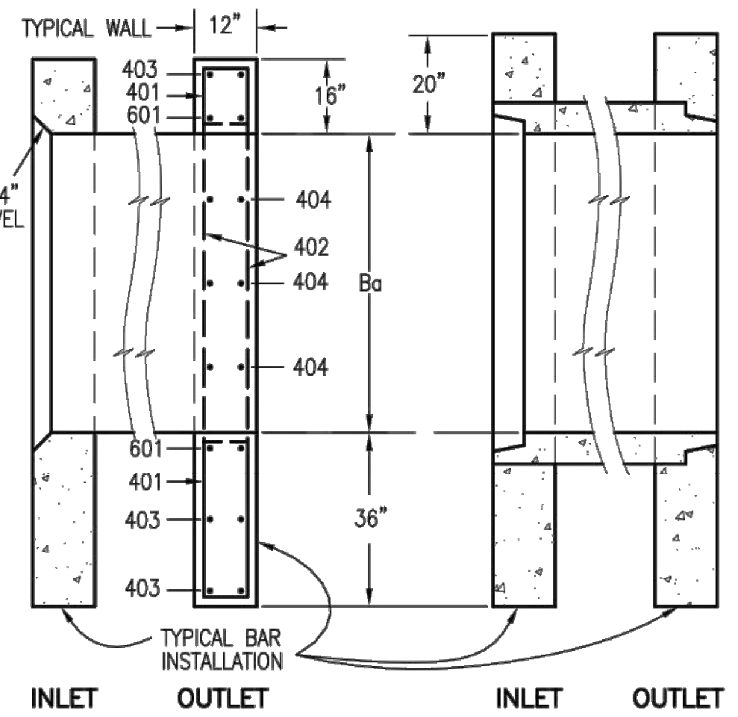
TYPICAL WALL
12"
403
401
601
16"
20"
4"x4" BEVEL
404
402
404
Ba
404
601
401
403
36"
403
TYPICAL BAR INSTALLATION
INLET
OUTLET
INLET
OUTLET

ENDS OF FLEXIBLE PIPE

ENDS OF RIGID PIPE

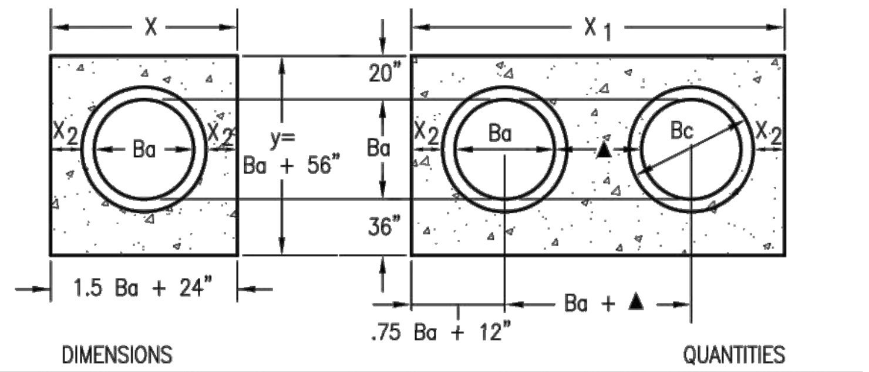
X
X1
20"
X2
Ba
y= Ba + 56"
Ba
Bc
36"
1.5 Ba + 24"
.75 Ba + 12"
Ba + ▲

DIMENSIONS									QUANTITIES			
Ba IN.	Bc IN.	X FT.–IN.	A IN.	X1 FT.–IN.	A1 IN.	y FT.–IN.	B IN.	X2 IN.	CONCRETE SGL CU.YD.	CONCRETE DBL CU.YD.	STEEL ■ SGL LBS.	STEEL ■ DBL LBS.
54	65	8–9	8½	15–6	7	9–2	17	20	2.12	3.55	209	364
60	72	9–6	7	17–0	10	9–8	11	21	2.35	3.99	236	414
66	79	10–3	11½	18–6	7	10–2	14	22	2.60	4.44	249	453
72	86	11–0	10	20–0	10	10–8	17	23	2.85	4.91	270	476
78	93	11–9	8½	21–3	11	11–2	11	24	3.11	5.29	306	527
84	100	12–6	7	22–6	7	11–8	14	25	3.38	5.68	333	572
90	107	13–3	11½	23–9	8½	12–2	17	26	3.66	6.08	335	593
96	114	14–0	10	25–0	10	12–8	11	27	3.94	6.48	379	649
102	121	14–9	8½	26–3	11½	13–2	14	28	4.24	6.89	400	664
108	128	15–6	7	27–6	7	13–8	17	29	4.54	7.30	424	707

HEADWALL FOR RIGID ROUND PIPE

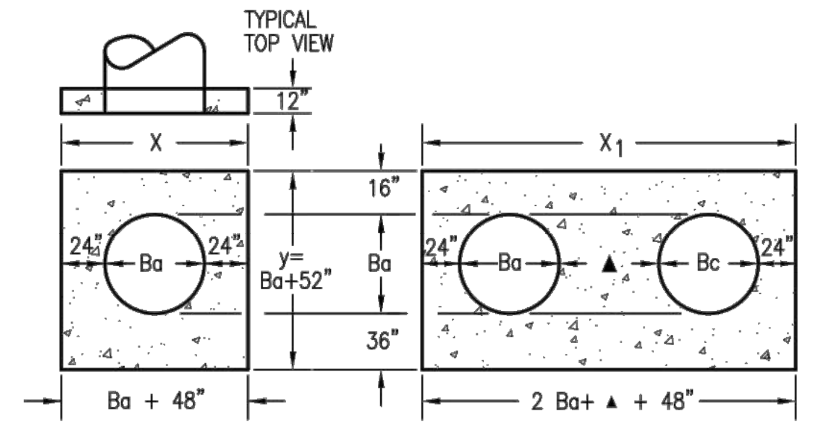
TYPICAL TOP VIEW
12"
X
X1
16"
24"
Ba
24"
y= Ba+52"
Ba
Bc
▲
36"
Ba + 48"
2 Ba+ ▲ + 48"

DIMENSIONS							QUANTITIES			
Ba IN.	X FT.–IN.	A IN.	X1 FT.–IN.	A1 IN.	y FT.–IN.	B IN.	CONCRETE SGL CU. YD.	CONCRETE DBL CU. YD.	STEEL ■ SGL LBS.	STEEL ■ DBL LBS.
54	8–6	7	15–3	11½	8–10	15	2.19	3.81	211	358
60	9–0	10	16–6	7	9–4	18	2.38	4.25	217	396
66	9–6	7	17–9	8½	9–10	12	2.58	4.70	252	454
72	10–0	10	19–0	10	10–4	15	2.78	5.17	255	472
78	10–6	7	20–0	10	10–10	18	2.98	5.56	276	499
84	11–0	10	21–0	10	11–4	12	3.19	5.95	297	553
90	11–6	7	22–0	10	11–10	15	3.40	6.36	317	517
96	12–0	10	23–0	10	12–4	18	3.62	6.79	321	597
102	12–6	7	24–0	10	12–10	12	3.84	7.21	364	663
108	13–0	10	25–0	10	13–4	15	4.06	7.63	362	678

HEADWALL FOR FLEXIBLE ROUND PIPE

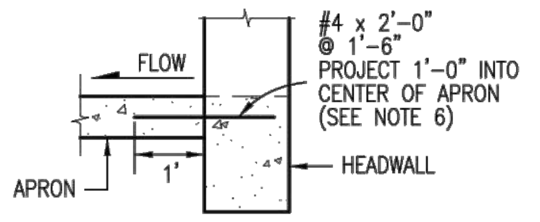
#4 x 2'−0" @ 1'−6" PROJECT 1'−0" INTO CENTER OF APRON (SEE NOTE 6)
FLOW
APRON
1'
HEADWALL

WHEN APRON IS REQUIRED

GENERAL NOTES

1. CONCRETE SHALL BE CLASS B.
2. HEADWALL SHALL BE PERPENDICULAR TO THE PIPE ℄ UNLESS OTHERWISE SHOWN ON THE PLANS. TABULATED DIMENSIONS AND QUANTITIES MUST BE ADJUSTED FOR SKEWED INSTALLATIONS.
3. FOR WINGWALL DETAILS, SEE STANDARD PLAN M–601–20.
4. VOLUME OCCUPIED BY PIPE HAS BEEN DEDUCTED FROM STEEL AND CONCRETE QUANTITIES.
5. EXPOSED CONCRETE CORNERS SHALL BE CHAMFERED ¾ IN.
6. ALL REINFORCING BARS SHALL HAVE A 2 IN. MINIMUM CLEARANCE.

▲ WHEN TWO OR MORE PIPES ARE LAID SIDE BY SIDE, THEY SHALL BE PLACED SO THAT THE ADJACENT PIPES WILL BE ½ INSIDE DIAMETER APART, OR ½ INSIDE SPAN APART, OR 3 FT. APART (INCLUDING WALL THICKNESS), WHICHEVER IS LESS.

■ ADD 0.89 x (X OR X_1) (LB.) WHEN APRON IS REQUIRED.

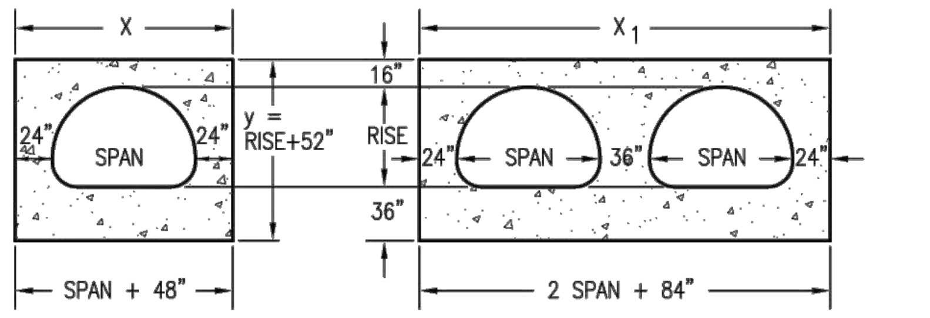
X
X1
16"
24"
SPAN
24"
y = RISE+52"
RISE
24"
SPAN
36"
SPAN
24"
36"
SPAN + 48"
2 SPAN + 84"

DIMENSIONS									QUANTITIES			
EQUIV. Ba IN.	SPAN IN.	RISE IN.	X FT.–IN.	A IN.	X1 FT.–IN.	A1 IN.	y FT.–IN.	B IN.	CONCRETE SGL CU. YD.	CONCRETE DBL CU. YD.	STEEL ■ SGL LBS.	STEEL ■ DBL LBS.
72	81	59	10–9	8½	20–6	7	9–3	17½	2.72	5.10	250	467
78	87	63	11–3	11½	21–6	7	9–7	10½	2.85	5.34	275	531
84	95	67	11–9	8½	22–10	9	9–11	12½	3.08	5.79	290	547
90	103	71	12–7	7½	24–2	11	10–3	15	3.30	6.21	321	591
96	112	75	13–4	12	25–8	8	10–7	16½	3.52	6.65	314	606
102	117	79	13–9	8½	26–6	7	10–11	9 ½	3.63	6.86	356	672
108	128	83	14–8	8	28–4	12	11–3	11½	3.96	7.51	376	699

HEADWALL FOR FLEXIBLE PIPE ARCH

DIMENSIONS									QUANTITIES			
EQUIV. Ba IN.	SPAN FT.–IN.	RISE FT.–IN.	X FT.–IN.	A IN.	X1 FT.–IN.	A1 IN.	y FT.–IN.	B IN.	CONCRETE SGL CU. YD.	CONCRETE DBL CU. YD.	STEEL ■ SGL LBS.	STEEL ■ DBL LBS.
66	6–1	4–7	10–1	10½	19–2	11	8–11	15½	2.52	4.70	232	424
75	7–0	5–1	11–0	10	21–0	10	9–5	9 ½	2.80	5.25	282	509
84	7–11	5–7	11–11	9½	22–10	9	9–11	12½	3.08	5.79	291	540
93	8–10	6–1	12–10	9	24–8	8	10–5	15½	3.36	6.33	309	622
102	9–9	6–7	13–9	8½	26–6	7	10–11	9 ½	3.63	6.86	379	673
111	10–11	7–1	14–11	9½	28–10	9	11–5	12½	4.05	7.67	377	711
120	11–10	7–7	15–10	9	30–8	8	11–11	15½	4.36	8.28	395	731
132	12–10	8–4	16–10	9	32–8	8	12–8	11	4.75	9.03	441	839
141	14–1	8–9	18–1	10½	35–2	11	13–1	13½	5.17	9.86	448	931
150	15–4	9–3	19–4	12	37–8	8	13–7	16½	5.69	10.88	490	953
159	15–10	9–10	19–10	9	38–8	8	14–2	11	5.89	11.25	534	1019

HEADWALL FOR STRUCTURAL PLATE ARCH

SKEW ANGLE A°	90	85	80	75	70	65	60	55	50	45	40	35	30
FACTOR (cosecA°)	1.000	1.004	1.015	1.035	1.064	1.103	1.155	1.221	1.305	1.414	1.556	1.743	2.000

SKEW FACTOR TABLE

Computer File Information	
Creation Date: 07/04/06	Initials: SJR
Last Modification Date: 07/04/06	Initials: LTA
Full Path: www.dot.state.co.us/DesignSupport/	
Drawing File Name: 6010100101.dwg	
CAD Ver.: MicroStation V8 Scale: Not to Scale Units: English	

(R–X)
(R–X)
(R–X)
(R–X)

Sheet Revisions	
Date:	Comments

Colorado Department of Transportation
4201 East Arkansas Avenue
Denver, Colorado 80222
Phone: (303) 757–9083
Fax: (303) 757–9820
Project Development Branch SRJ/LTA

HEADWALLS FOR PIPES

Issued By: Project Development Branch on July 04, 2006

STANDARD PLAN NO.
M-601-10
Sheet No. 1 of 1

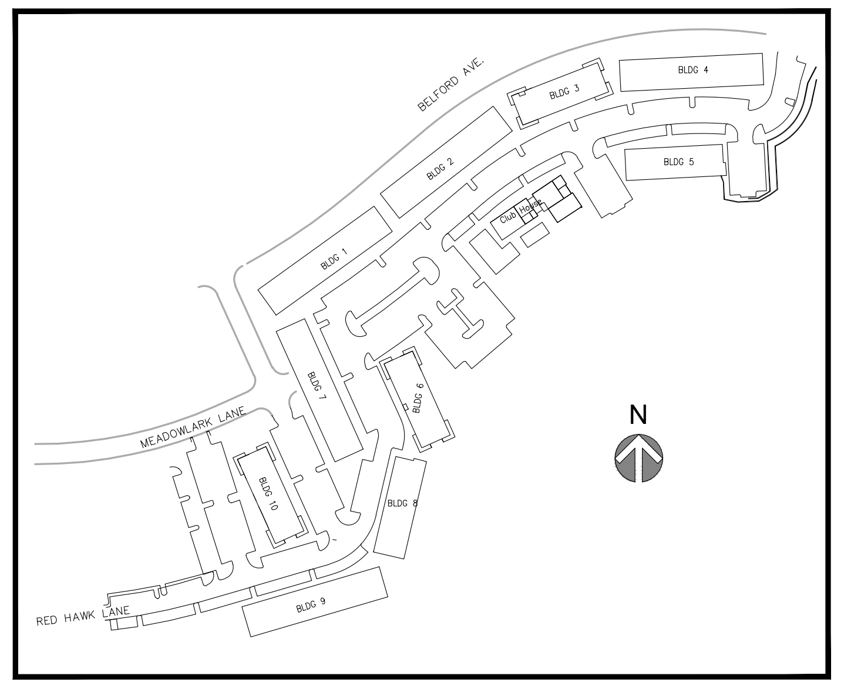

MERRICK®
Engineering | Architecture | Design-Build | Surveying | Planning | Geospatial Solutions
5970 GREENWOOD PLAZA BLVD. GREENWOOD VILLAGE, CO. 80111
303-751-0741
www.merrick.com

CENTURY — LIVING —

REV	REVISION DESCRIPTION	DATE	CHND	CHKD	APPR

TITLE
COMPARK VILLAGE SOUTH
PRIVATE IMPROVEMENT
CONSTRUCTION PLANS

POND - GRADING DETAILS

PE STAMP
KRISTOFER KYLE WIEST
46080
09/08/2022
FOR AND ON BEHALF OF MERRICK & COMPANY

THE TOWN OF PARKER REVIEW CONSTITUTES GENERAL COMPLIANCE WITH THE TOWN'S STANDARDS AND APPROVED VARIANCES, SUBJECT TO THESE PLANS BEING STAMPED, SIGNED, AND DATED BY THE PROFESSIONAL ENGINEER OF RECORD. REVIEW BY THE TOWN DOES NOT CONSTITUTE APPROVAL OF THE PLAN DESIGN OR ACCURACY AND CORRECTNESS OF ENGINEERING CALCULATIONS. ERRORS IN THE DESIGN OR CALCULATIONS REMAIN THE RESPONSIBILITY OF THE REGISTERED PROFESSIONAL ENGINEER WHOSE STAMP AND SIGNATURE ARE AFFIXED TO THIS DOCUMENT.

THIS REVIEW DOES NOT CONSTITUTE APPROVAL OF ANY PRIVATE ON-SITE IMPROVEMENTS WHICH MAY BE SHOWN. CONSTRUCTION CANNOT COMMENCE UNTIL ALL REQUIRED DRAINAGE/TRAFFIC REPORT(S), FINAL DEVELOPMENT PLAN(S), SPECIAL REVIEW(S), GRADING PERMIT, AND/OR OTHER PERMITS ARE COMPLETE, APPROVED AND ON FILE WITH THE TOWN OF PARKER.

TOWN OF PARKER, DIRECTOR OF ENGINEERING DATE

JOB NUMBER 65120950
DATE 7/1/2022
SHEET C4.3
28

Know what's below.
Call before you dig.

File Location:Q:\DEN\Projects\0950-00 Compark South\CAD\CDs\Tract G Pond\0950-GRD.dwg Plot Date:9/12/2022 4:06 PM Last Saved By: KBLACK

THIS AND ANY OTHER ELECTRONIC MEDIA COUNTERPART IS AN INSTRUMENT OF SERVICE PREPARED BY MERRICK AND COMPANY FOR A DEFINED PROJECT. IT IS NOT INTENDED OR REPRESENTED TO BE SUITABLE FOR REUSE IN WHOLE OR IN PART ON EXTENSIONS OF THE PROJECT OR ON ANY OTHER PROJECT. REUSE OR MODIFICATION, OF ANY UTILIZATION IF NOT A FINISHED INSTRUMENT, WITHOUT THE PRIOR EXPRESS WRITTEN CONSENT OF MERRICK AND COMPANY SHALL BE AT THE SOLE RISK FOR THE UNAUTHORIZED USER WITHOUT LIABILITY OR LOSS EXPOSURE TO MERRICK AND COMPANY.

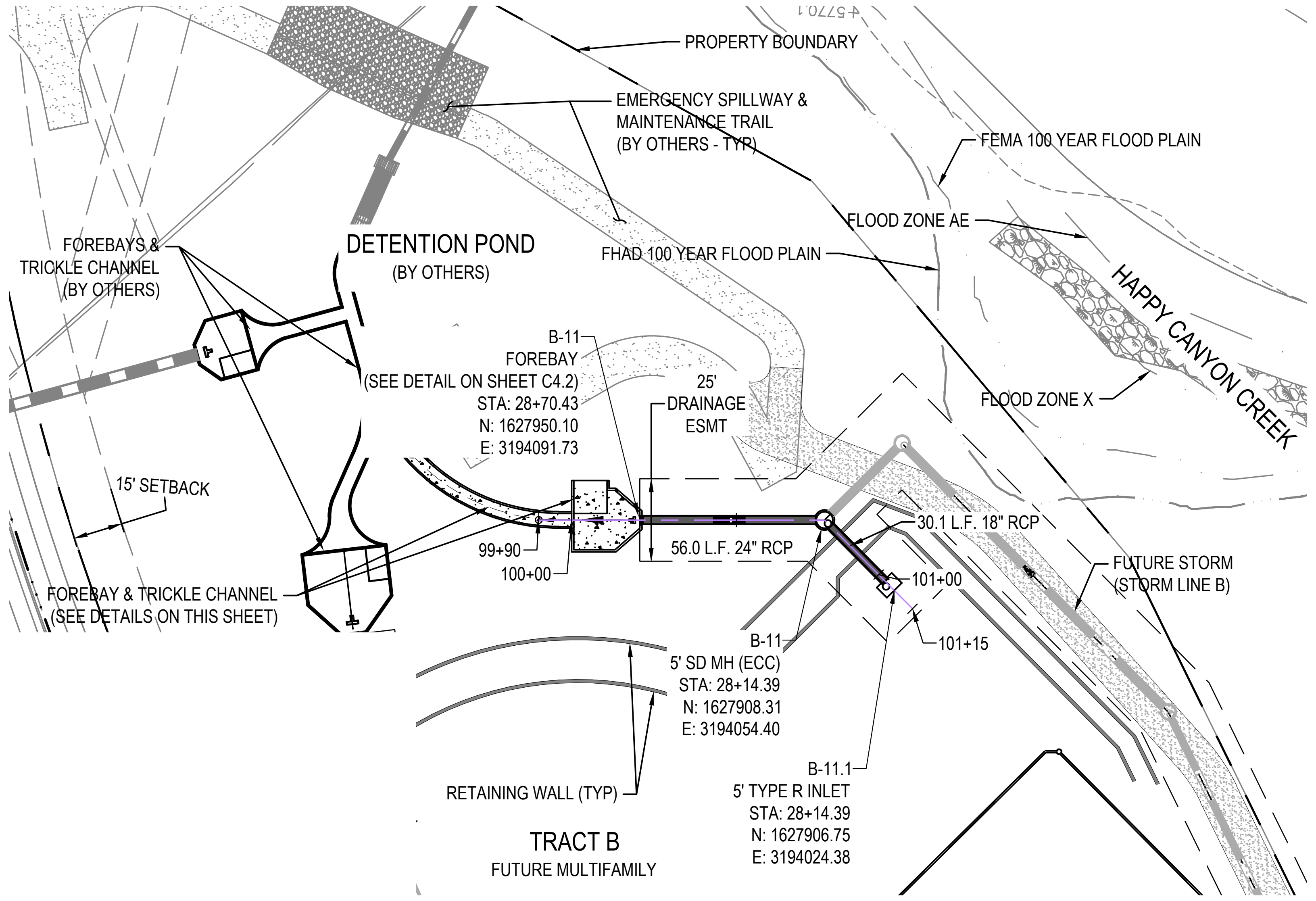
PROPERTY BOUNDARY
EMERGENCY SPILLWAY & MAINTENANCE TRAIL (BY OTHERS - TYP)
FEMA 100 YEAR FLOOD PLAIN
N
FOREBAYS & TRICKLE CHANNEL (BY OTHERS)
DETENTION POND (BY OTHERS)
FLOOD ZONE AE
FHAD 100 YEAR FLOOD PLAIN
HAPPY CANYON CREEK
B-11 FOREBAY (SEE DETAIL ON SHEET C4.2) STA: 28+70.43 N: 1627950.10 E: 3194091.73
25' DRAINAGE ESMT
FLOOD ZONE X
15' SETBACK
30.1 L.F. 18" RCP
56.0 L.F. 24" RCP
99+90
100+00
101+00
FUTURE STORM (STORM LINE B)
FOREBAY & TRICKLE CHANNEL (SEE DETAILS ON THIS SHEET)
101+15
B-11 5' SD MH (ECC) STA: 28+14.39 N: 1627908.31 E: 3194054.40
RETAINING WALL (TYP)
B-11.1 5' TYPE R INLET STA: 28+14.39 N: 1627906.75 E: 3194024.38
TRACT B
FUTURE MULTIFAMILY

STORM LINE B2

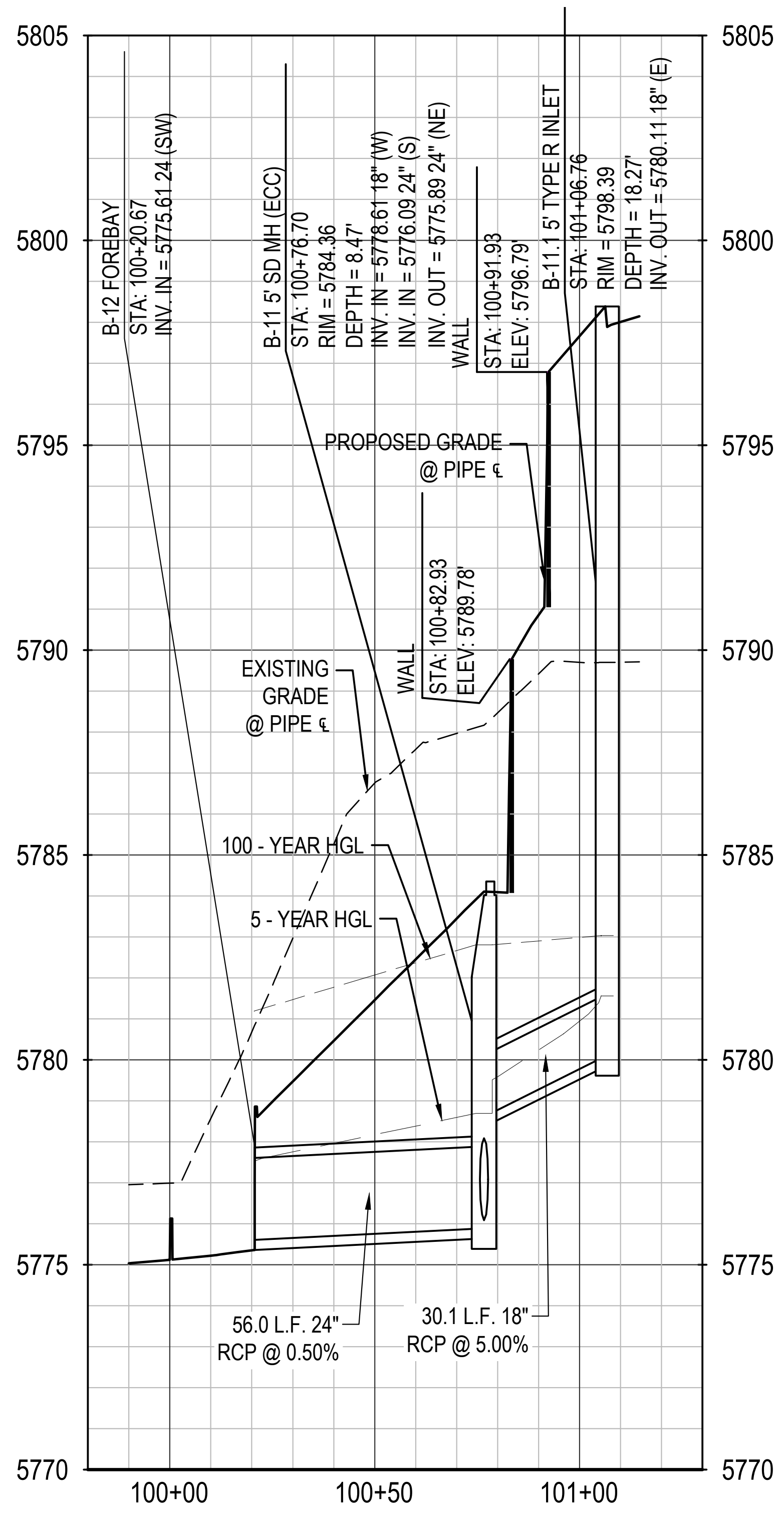
5805
5800
5795
5790
5785
5780
5775
5770
B-12 FOREBAY
STA: 100+20.67
INV. IN = 5775.61 24 (SW)
B-11 5' SD MH (ECC)
STA: 100+76.70
RIM = 5784.36
DEPTH = 8.47'
INV. IN = 5778.61 18" (W)
INV. IN = 5776.09 24" (S)
INV. OUT = 5775.89 24" (NE)
WALL
STA: 100+91.93
ELEV: 5796.79'
B-11.1 5' TYPE R INLET
STA: 101+06.76
RIM = 5798.39
DEPTH = 18.27'
INV. OUT = 5780.11 18" (E)
PROPOSED GRADE @ PIPE ℄
WALL
STA: 100+82.93
ELEV: 5789.78'
EXISTING GRADE @ PIPE ℄
100 - YEAR HGL
5 - YEAR HGL
56.0 L.F. 24" RCP @ 0.50%
30.1 L.F. 18" RCP @ 5.00%
100+00
100+50
101+00

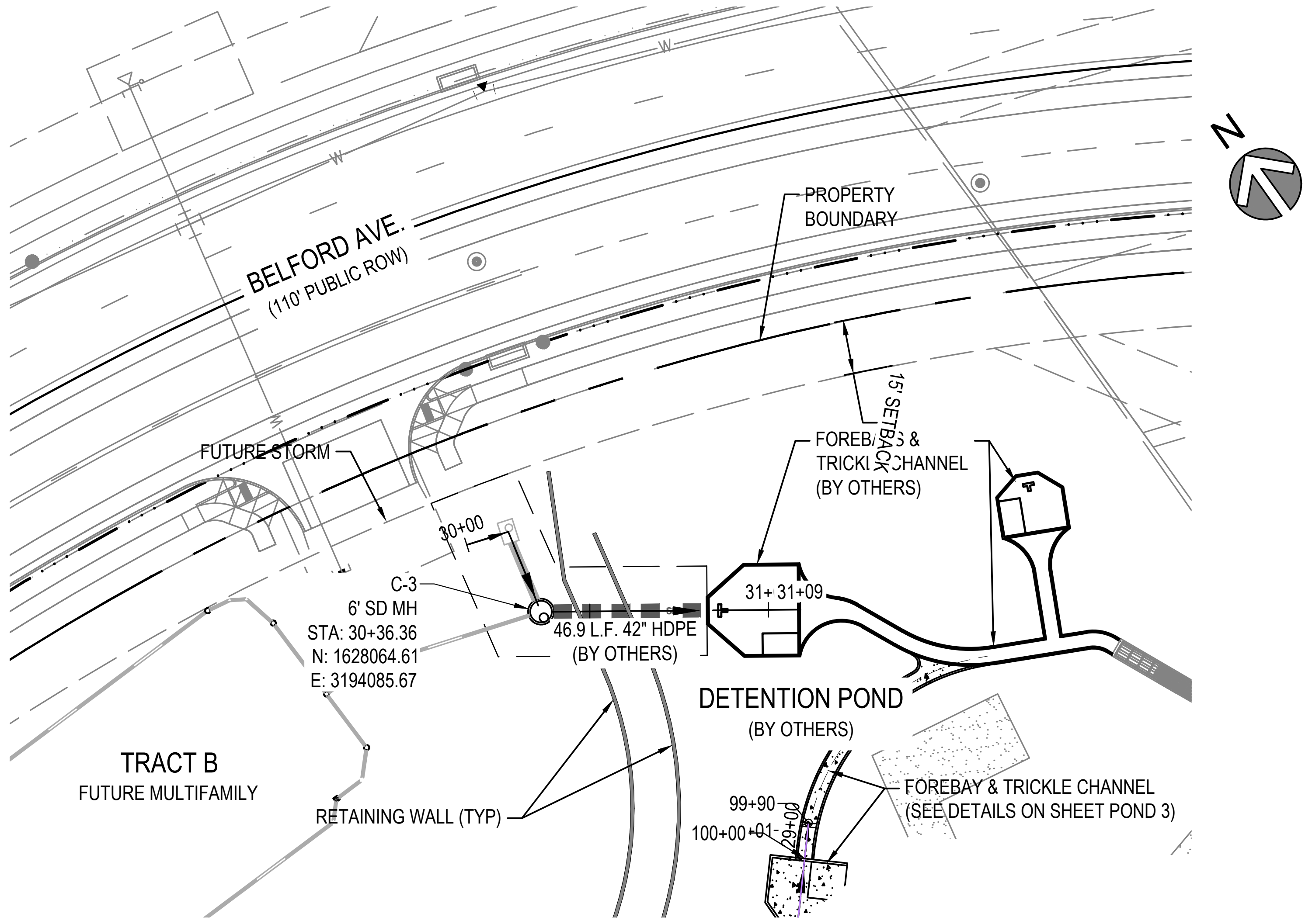
BELFORD AVE.
(110' PUBLIC ROW)
N
PROPERTY BOUNDARY
15' SETBACK
FUTURE STORM
FOREBAYS & TRICKLE CHANNEL (BY OTHERS)
30+00
C-3 6' SD MH STA: 30+36.36 N: 1628064.61 E: 3194085.67
31+09
46.9 L.F. 42" HDPE (BY OTHERS)
DETENTION POND (BY OTHERS)
TRACT B
FUTURE MULTIFAMILY
RETAINING WALL (TYP)
99+90
100+00
29+00
FOREBAY & TRICKLE CHANNEL (SEE DETAILS ON SHEET POND 3)

STORM LINE C

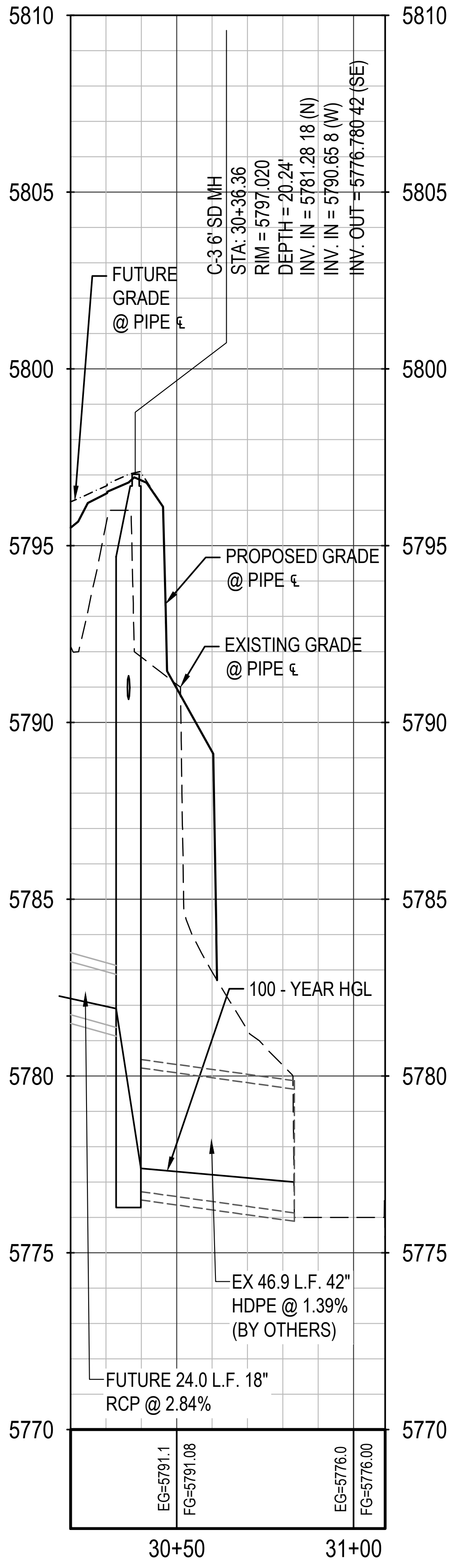
5810
5805
5800
5795
5790
5785
5780
5775
5770
C-3 6' SD MH
STA: 30+36.36
RIM = 5797.020
DEPTH = 20.24'
INV. IN = 5781.28 18 (N)
INV. IN = 5790.65 8 (W)
INV. OUT = 5776.780 42 (SE)
FUTURE GRADE @ PIPE ℄
PROPOSED GRADE @ PIPE ℄
EXISTING GRADE @ PIPE ℄
100 - YEAR HGL
EX 46.9 L.F. 42" HDPE @ 1.39% (BY OTHERS)
FUTURE 24.0 L.F. 18" RCP @ 2.84%
EG=5791.1
FG=5791.08
EG=5776.0
FG=5776.00
30+50
31+00

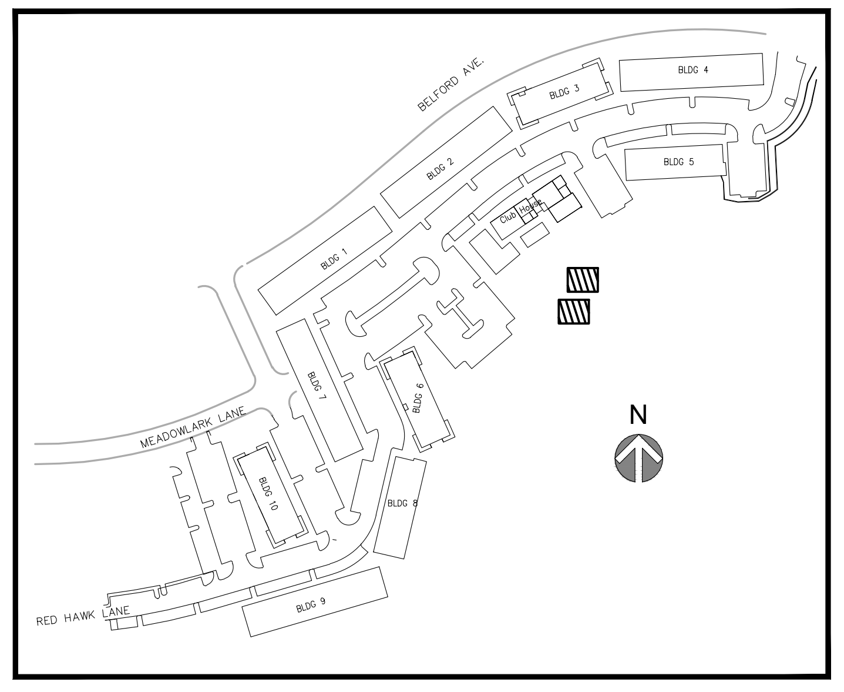

40' 0 20' 40' 80'

1" = 40' HOR.

NOTES:

1. ALL STATIONING & PIPE LENGTHS ARE TO CENTER OF STRUCTURE.
2. ALL RCP TO BE CLASS III UNLESS SPECIFIED OTHERWISE.
3. CONTRACTOR TO VERIFY LOCATION/ELEVATION OF ALL UTILITIES PRIOR TO CONSTRUCTION.
4. ALL MANHOLES TO HAVE 48" INNER DIAMETER.
5. DETENTION POND AND OUTFALL TO BE CONSTRUCTED BY OTHERS.
6. ALL STORM SEWER IS PRIVATE UNLESS OTHERWISE NOTED.

THE TOWN OF PARKER REVIEW CONSTITUTES GENERAL COMPLIANCE WITH THE TOWN'S STANDARDS AND APPROVED VARIANCES, SUBJECT TO THESE PLANS BEING STAMPED, SIGNED, AND DATED BY THE PROFESSIONAL ENGINEER OF RECORD. REVIEW BY THE TOWN DOES NOT CONSTITUTE APPROVAL OF THE PLAN DESIGN OR ACCURACY AND CORRECTNESS OF ENGINEERING CALCULATIONS. ERRORS IN THE DESIGN OR CALCULATIONS REMAIN THE RESPONSIBILITY OF THE REGISTERED PROFESSIONAL ENGINEER WHOSE STAMP AND SIGNATURE ARE AFFIXED TO THIS DOCUMENT.

THIS REVIEW DOES NOT CONSTITUTE APPROVAL OF ANY PRIVATE ON-SITE IMPROVEMENTS WHICH MAY BE SHOWN. CONSTRUCTION CANNOT COMMENCE UNTIL ALL REQUIRED DRAINAGE/TRAFFIC REPORT(S), FINAL DEVELOPMENT PLAN(S), SPECIAL REVIEW(S), GRADING PERMIT, AND/OR OTHER PERMITS ARE COMPLETE, APPROVED AND ON FILE WITH THE TOWN OF PARKER.

TOWN OF PARKER, DIRECTOR OF ENGINEERING DATE

811
Know what's below.
Call before you dig.

MERRICK®
Engineering / Architecture / Design-Build / Surveying / Planning / Geospatial Solutions
5970 GREENWOOD PLAZA BLVD. GREENWOOD VILLAGE, CO. 80111
303-751-0741
www.merrick.com

CENTURY — LIVING —

REV	REVISION DESCRIPTION	DATE	CHND	CHKD	APPR

TITLE
COMPARK VILLAGE SOUTH
PRIVATE IMPROVEMENT
CONSTRUCTION PLANS

POND - STRM PLAN & PROFILE

PE STAMP
KRISTOFER KYLE WIEST
46080
09/08/2022
FOR AND ON BEHALF OF MERRICK & COMPANY

JOB NUMBER 65120950
DATE 7/1/2022
SHEET C4.3
29

THIS AND ANY OTHER ELECTRONIC MEDIA COUNTERPART IS AN INSTRUMENT OF SERVICE PREPARED BY MERRICK AND COMPANY FOR A DEFINED PROJECT. IT IS NOT INTENDED OR REPRESENTED TO BE SUITABLE FOR REUSE IN WHOLE OR IN PART ON EXTENSIONS OF THE PROJECT OR ON ANY OTHER PROJECT. REUSE OR MODIFICATION, OF ANY UTILIZATION IF NOT A FINISHED INSTRUMENT, WITHOUT THE PRIOR EXPRESS WRITTEN CONSENT OF MERRICK AND COMPANY SHALL BE AT THE SOLE RISK FOR THE UNAUTHORIZED USER WITHOUT LIABILITY OR LOSS EXPOSURE TO MERRICK AND COMPANY.

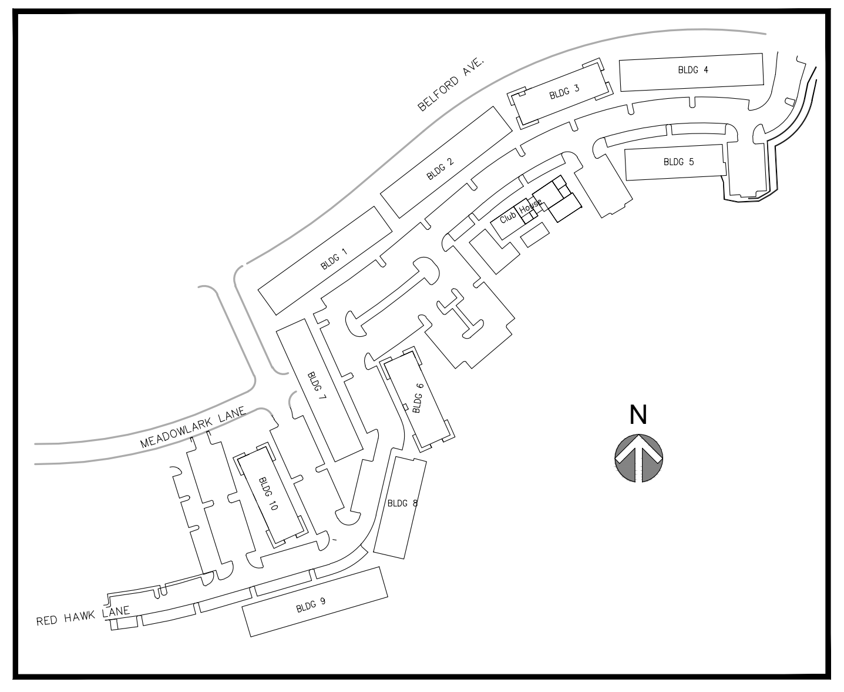
RED HAWK LANE
BLDG 9
N

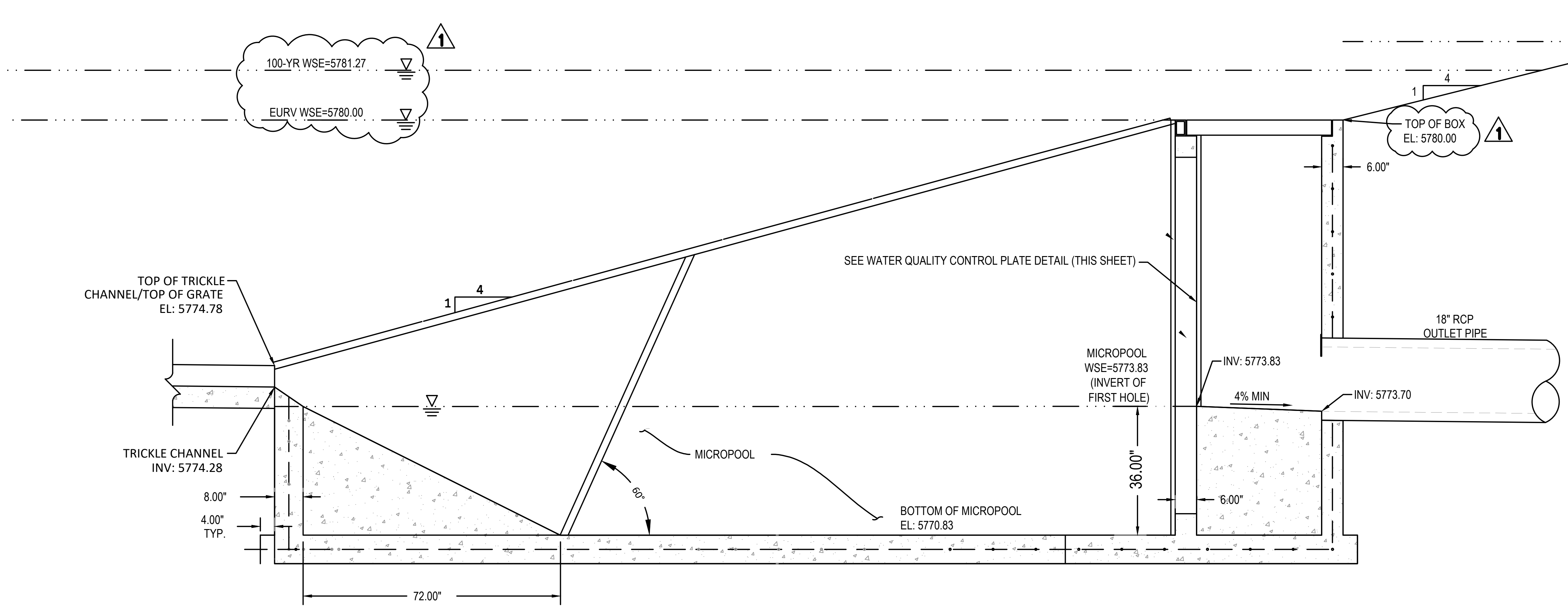
100-YR WSE=5781.27
EURV WSE=5780.00
1
4
TOP OF BOX
EL: 5780.00
6.00"
TOP OF TRICKLE
CHANNEL/TOP OF GRATE
EL: 5774.78
SEE WATER QUALITY CONTROL PLATE DETAIL (THIS SHEET)
18" RCP
OUTLET PIPE
MICROPOOL
WSE=5773.83
(INVERT OF
FIRST HOLE)
INV: 5773.83
4% MIN
INV: 5773.70
TRICKLE CHANNEL
INV: 5774.28
MICROPOOL
60°
36.00"
6.00"
8.00"
4.00"
TYP.
BOTTOM OF MICROPOOL
EL: 5770.83
72.00"

SECTION A

NTS

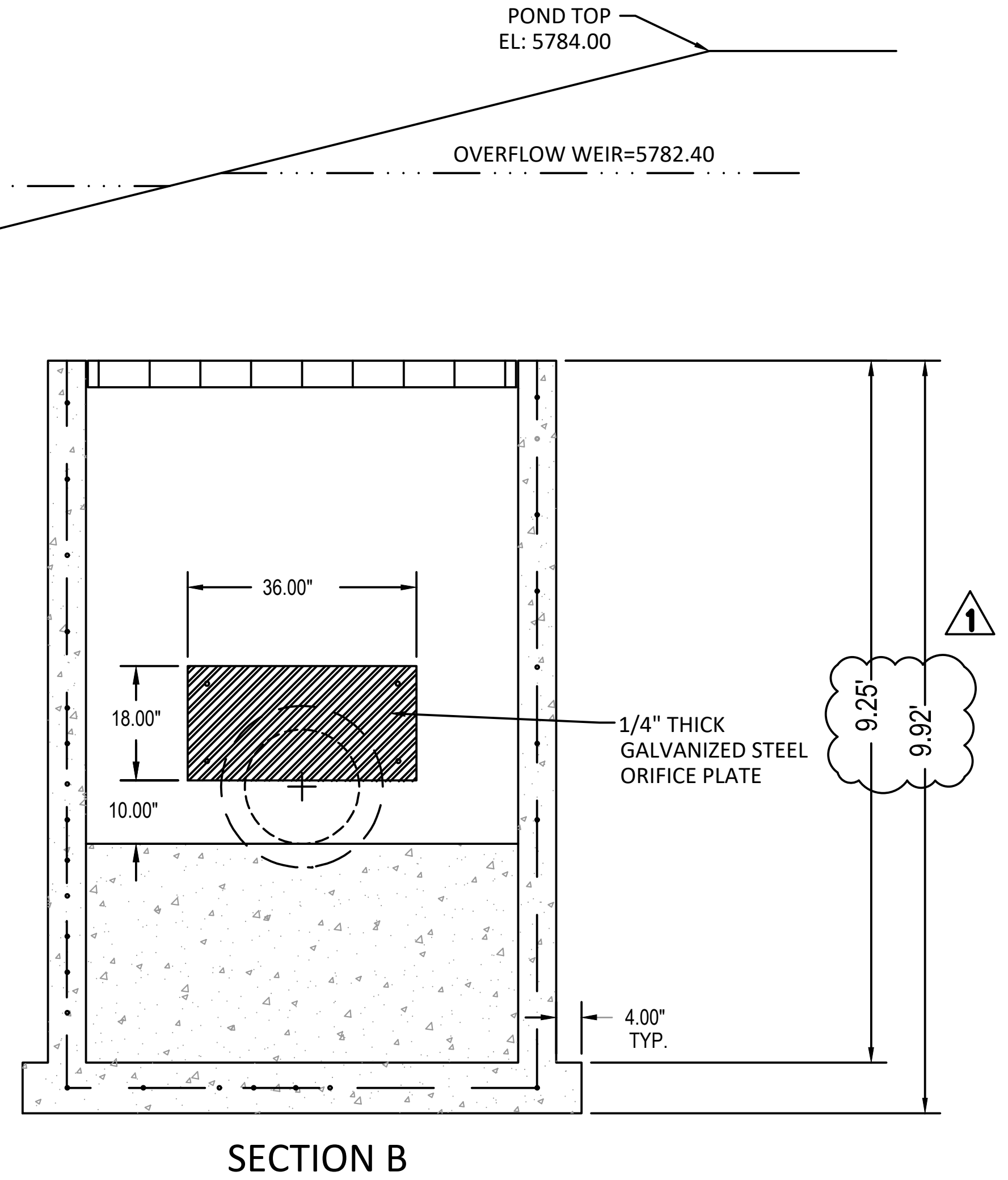
POND TOP
EL: 5784.00
OVERFLOW WEIR=5782.40
36.00"
18.00"
10.00"
1/4" THICK
GALVANIZED STEEL
ORIFICE PLATE
9.25'
9.92'
4.00"
TYP.

SECTION B

1"=2'

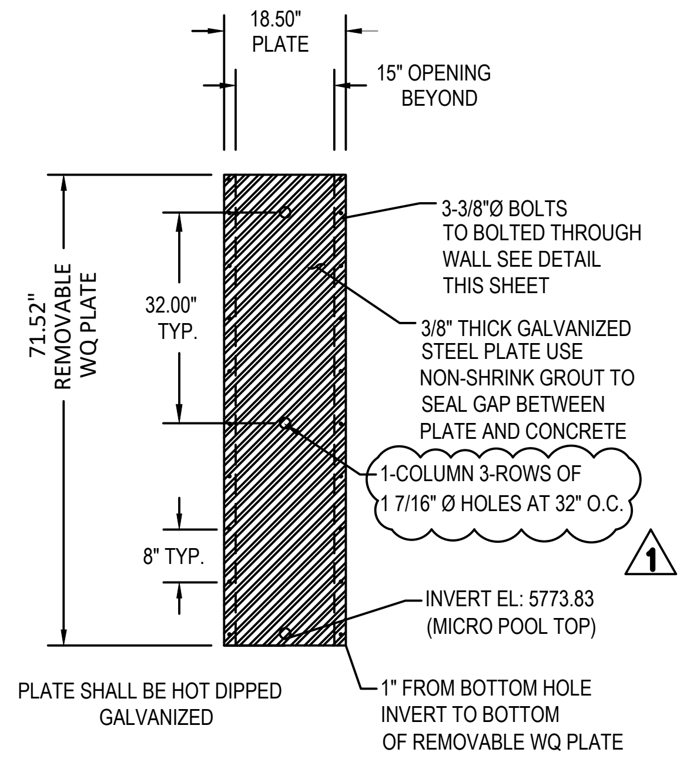
18.50"
PLATE
15" OPENING
BEYOND
71.52"
REMOVABLE
WQ PLATE
32.00"
TYP.
8" TYP.
3-3/8"Ø BOLTS
TO BOLTED THROUGH
WALL SEE DETAIL
THIS SHEET
3/8" THICK GALVANIZED
STEEL PLATE USE
NON-SHRINK GROUT TO
SEAL GAP BETWEEN
PLATE AND CONCRETE
1-COLUMN 3-ROWS OF
1 7/16" Ø HOLES AT 32" O.C.
INVERT EL: 5773.83
(MICRO POOL TOP)
1" FROM BOTTOM HOLE
INVERT TO BOTTOM
OF REMOVABLE WQ PLATE
PLATE SHALL BE HOT DIPPED
GALVANIZED

WATER QUALITY CONTROL PLATE

NTS

NOTES:

1. OUTLET STUCTURE ORIGINAL DESIGN COMPLETED BY MANHARD. REFER TO APPROVED MANHARD DESIGN PLANS FOR COMPLETE OUTLET STRUCTURE DETAILS. THE APPLICABLE REVISIONS SHOWN ARE THE DESIGN REVISIONS COMPLETED BY MERRICK & COMPANY.

THE TOWN OF PARKER REVIEW CONSTITUTES GENERAL COMPLIANCE WITH THE TOWN'S STANDARDS AND APPROVED VARIANCES, SUBJECT TO THESE PLANS BEING STAMPED, SIGNED, AND DATED BY THE PROFESSIONAL ENGINEER OF RECORD. REVIEW BY THE TOWN DOES NOT CONSTITUTE APPROVAL OF THE PLAN DESIGN OR ACCURACY AND CORRECTNESS OF ENGINEERING CALCULATIONS. ERRORS IN THE DESIGN OR CALCULATIONS REMAIN THE RESPONSIBILITY OF THE REGISTERED PROFESSIONAL ENGINEER WHOSE STAMP AND SIGNATURE ARE AFFIXED TO THIS DOCUMENT.

THIS REVIEW DOES NOT CONSTITUTE APPROVAL OF ANY PRIVATE ON-SITE IMPROVEMENTS WHICH MAY BE SHOWN. CONSTRUCTION CANNOT COMMENCE UNTIL ALL REQUIRED DRAINAGE/TRAFFIC REPORT(S), FINAL DEVELOPMENT PLAN(S), SPECIAL REVIEW(S), GRADING PERMIT, AND/OR OTHER PERMITS ARE COMPLETE, APPROVED AND ON FILE WITH THE TOWN OF PARKER.

TOWN OF PARKER, DIRECTOR OF ENGINEERING DATE

Know what's **below.**
Call before you dig.

File Location:Q:\DEN\Projects\0950-00 Compark South\CAD\CDs\Tract G Pond\0950-OUTLET.dwg Plot Date:9/12/2022 4:09 PM Last Saved By: KBLACK

MERRICK®
Engineering / Architecture / Design-Build / Surveying / Planning / Geospatial Solutions
5970 GREENWOOD PLAZA BLVD. GREENWOOD VILLAGE, CO. 80111
303-751-0741
www.merrick.com

CENTURY
— LIVING —

REV	REVISION DESCRIPTION	DATE	CHND	CHKD	APPR
1	COMPARK VILLAGE SOUTH, F1 - BELFORD AVE SITE PLAN AMD WQ PLATE	03/24/2022	KB	KB	KW

TITLE
COMPARK VILLAGE SOUTH
PRIVATE IMPROVEMENT CONSTRUCTION PLANS

POND - STRM OUTLET STRUCTURE

PE STAMP
46080
09/08/2022
KRISTOFER KYLE WIEST
FOR AND ON BEHALF OF MERRICK & COMPANY

JOB NUMBER 65120950
DATE 7/1/2022
SHEET C4.4
30

THIS AND ANY OTHER ELECTRONIC MEDIA COUNTERPART IS AN INSTRUMENT OF SERVICE PREPARED BY MERRICK AND COMPANY FOR A DEFINED PROJECT. IT IS NOT INTENDED OR REPRESENTED TO BE SUITABLE FOR REUSE IN WHOLE OR IN PART ON EXTENSIONS OF THE PROJECT OR ON ANY OTHER PROJECT. REUSE OR MODIFICATION, OF ANY UTILIZATION IF NOT A FINISHED INSTRUMENT, WITHOUT THE PRIOR EXPRESS WRITTEN CONSENT OF MERRICK AND COMPANY SHALL BE AT THE SOLE RISK FOR THE UNAUTHORIZED USER WITHOUT LIABILITY OR LOSS EXPOSURE TO MERRICK AND COMPANY.

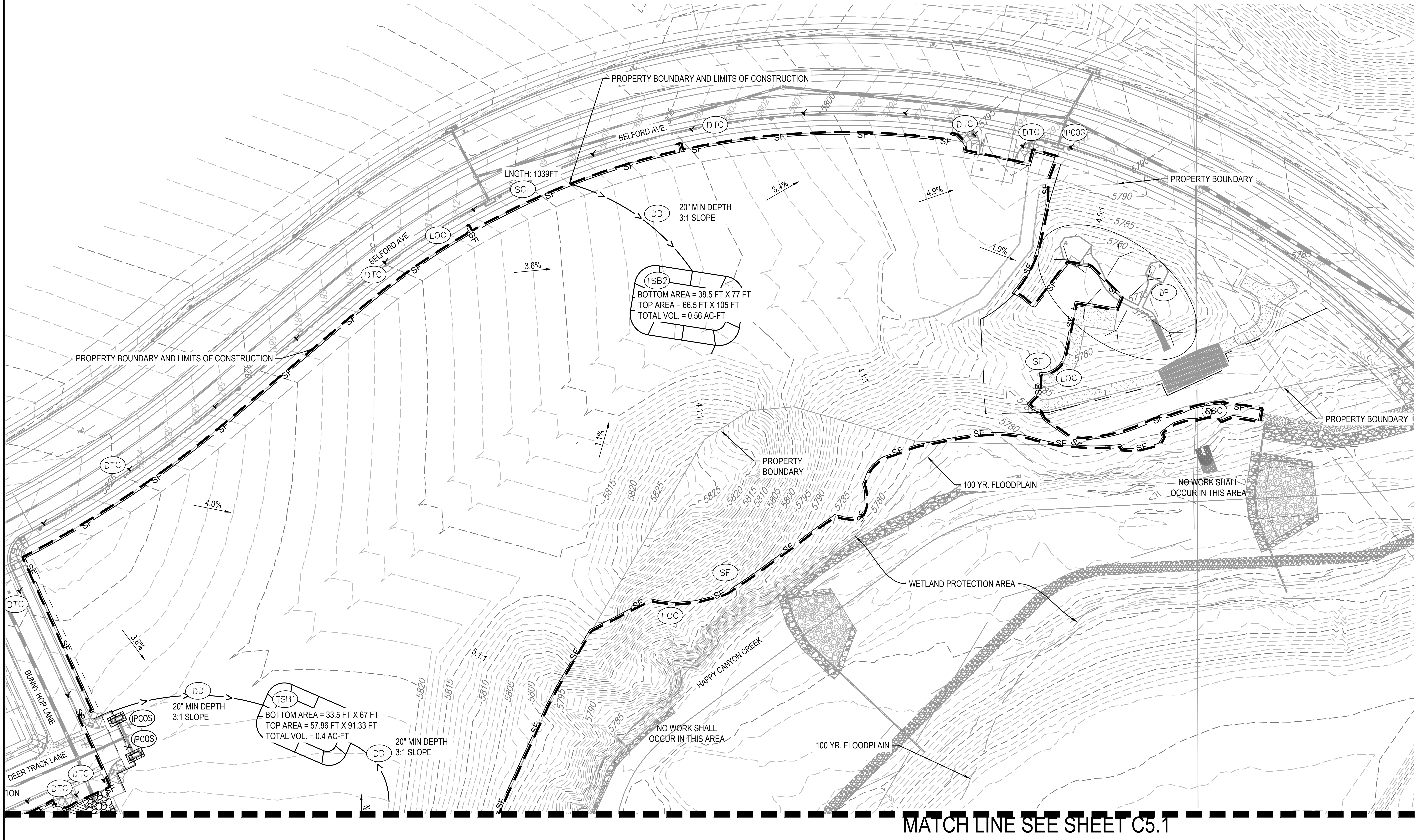
PROPERTY BOUNDARY AND LIMITS OF CONSTRUCTION
BELFORD AVE
DTC
SF
LNGTH: 1039FT
SCL
DD
20" MIN DEPTH
3:1 SLOPE
3.4%
4.9%
DTC
DTC
IPCOG
PROPERTY BOUNDARY
5790
5785
5780
4.0:1
1.0%
DP
BELFORD AVE.
LOC
DTC
3.6%
TSB2
BOTTOM AREA = 38.5 FT X 77 FT
TOP AREA = 66.5 FT X 105 FT
TOTAL VOL. = 0.56 AC-FT
PROPERTY BOUNDARY AND LIMITS OF CONSTRUCTION
4.1:1
SF
LOC
SSC
PROPERTY BOUNDARY
1.1%
PROPERTY BOUNDARY
100 YR. FLOODPLAIN
NO WORK SHALL OCCUR IN THIS AREA
DTC
4.0%
5815
5820
5825
5810
5805
5800
5795
5790
5785
5780
SF
WETLAND PROTECTION AREA
DTC
3.8%
LOC
BUNNY HOP LANE
DD
20" MIN DEPTH
3:1 SLOPE
TSB1
BOTTOM AREA = 33.5 FT X 67 FT
TOP AREA = 57.86 FT X 91.33 FT
TOTAL VOL. = 0.4 AC-FT
IPCOS
IPCOS
DD
20" MIN DEPTH
3:1 SLOPE
5:1:1
HAPPY CANYON CREEK
NO WORK SHALL OCCUR IN THIS AREA
100 YR. FLOODPLAIN
DEER TRACK LANE
DTC
DTC
MATCH LINE SEE SHEET C5.1

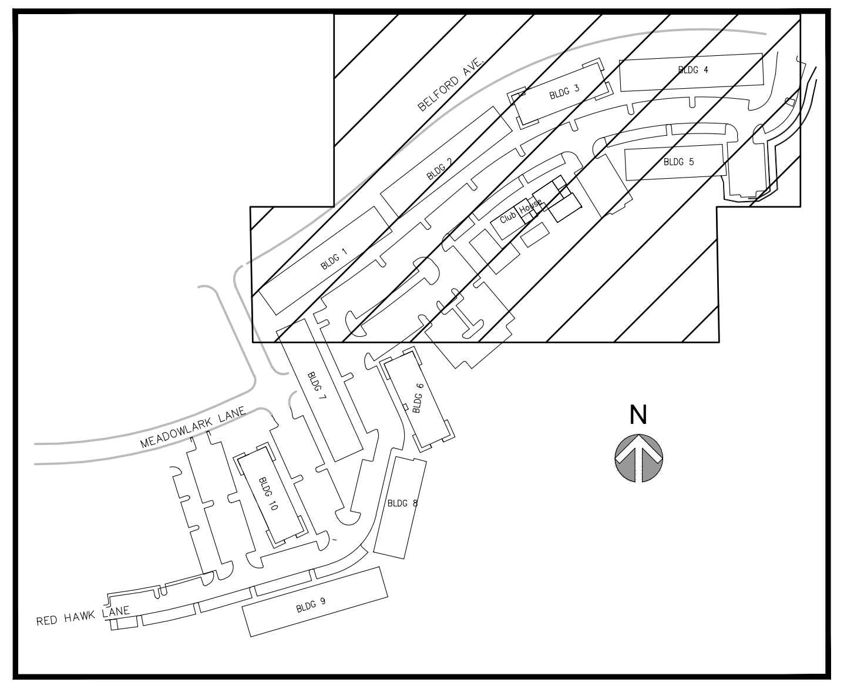
N
BELFORD AVE
MEADOWLARK LANE
RED HAWK LANE

TEMPORARY BMP LEGEND:

——x——	SF	SILT FENCE
—>—>—	DD	DIVERSION DITCH
▨	RS	ROCK SOCK
▭	IPCOS	INLET PROTECTION CURB ON SUMP
— — —	LOC	LIMITS OF CONSTRUCTION
▨	SSA	STABILIZED STAGING AREA
▩	ECB	EROSION CONTROL BLANKET
▨	SCL	SEDIMENT CONTROL LOG
⁘	SMC	SEEDING, MULCHING AND CRIMPING
▩	VTC	VEHICLE TRACKING CONTROL
▢	CWA	CONCRETE WASHOUT AREA
▭	TSB	SEDIMENT BASIN
˅	DTC	SEDIMENT BASIN
◔	STP	SIDEWALK TRANSITION PROTECTION
◉	MWP	MASON WORK PROTECTION PROTECTION
⬭	DP	DETENTION POND PROTECTION
⊓	IPCOG	INLET PROTECTION CURB ON GRADE

NOTES:

1. INTERIOR SILT FENCE SHOULD BE PLACED BY THE CONTRACTOR TO INTERMITTENTLY INTERCEPT GROUND FLOW. LOCATION TO BE BASED ON SITE CONDITIONS.
2. REFER TO EROSION CONTROL DETAILS (C8.0)
3. OWNER/CONTRACTOR MUST OBTAIN THE CDPS GENERAL PERMIT FROM THE COLORADO DEPARTMENT OF PUBLIC HEALTH AND ENVIRONMENT, WATER QUALITY CONTROL DIVISION.
4. THE TOWN OF PARKER'S "STANDARD EROSION AND SEDIMENT CONTROL CONSTRUCTION PLAN NOTES, FEBRUARY 2005" TAKE PRECEDENCE OVER THE "GENERAL EROSION CONTROL NOTES" WHENEVER THERE IS A QUESTION OR CONFLICT IN THE NOTES.
5. THE OWNER/CONTRACTOR MUST ADHERE AND ABIDE TO THE RULES AND REGULATIONS IMPOSED BY THE CITY OF LOVELAND.
6. SLOPE PROTECTION SHOULD BE ADDED TO ALL AREAS OF SLOPES GREATER THAN 4:1. CONTRACTOR TO USE "TRACKED" VEHICLE, RUN PERPENDICULAR TO SLOPE TO INHIBIT RILL/GULLEY EROSION, CONTRACTOR MAY USE OTHER WINDROW-TYPE METHODS AS APPROVED BY ENGINEER. TYPICAL ALL SLOPES, REPEAT AS NECESSARY UNTIL LANDSCAPING IS INSTALLED.
7. ALL VEHICLE SPEEDS SHALL BE LIMITED TO A MAXIMUM OF 25 MILES PER HOUR.
8. ALL UNPAVED ROADWAYS AND DISTURBED SURFACE AREAS SHALL BE WATERED AS NEEDED TO PREVENT FUGITIVE DUST EMISSIONS.
9. TO REDUCE THE POTENTIAL FOR CLOGGING OF DEBRIS GRATES, NO STRAW MULCH SHALL BE USED WITHIN THE EXCESS URBAN RUNOFF VOLUME OF A DETENTION BASIN. INSTEAD, EROSION CONTROL BLANKET SHALL BE INSTALLED FOR A WIDTH OF AT LEAST 6-FEET ON BOTH SIDES OF THE CONCRETE LOW FLOW CHANNELS OR UP TO A DEPTH OF 1-FOOT IN SOIL RIPRAP OR BENCHED LOW FLOW CHANNELS. ADDITIONALLY, HYDRAULICALLY-APPLIED WOOD FIBER MULCH, STABILIZED FIBER MATRIX, BONDED FIBER MATRIX, OR FLEXIBLE GROWTH MEDIUM SHALL BE USED IN ALL OTHER AREAS WITHIN THE EXCESS URBAN RUNOFF VOLUME OF THE DETENTION BASIN. THE BLANKET AND HYDRAULICALLY-APPLIED MULCH SHALL COMPLY WITH THE MATERIALS AND INSTALLATION REQUIREMENTS FOR EROSION CONTROL BLANKETS AS REQUIRED BY THE TOWN'S CBMP PROGRAM, AND WHERE APPLICABLE, THE PRODUCT MANUFACTURER."
10. LOT PROTECTION (LP) IS REQUIRED ON ALL RESIDENTIAL LOTS PRIOR TO ISSUANCE OF A CERTIFICATE OF OCCUPANCY
11. REFER TO LANDSCAPE PLANS FOR FINAL STABILIZATION IN NON-HARDSCAPED AREAS

THE TOWN OF PARKER REVIEW CONSTITUTES GENERAL COMPLIANCE WITH THE TOWN'S STANDARDS AND APPROVED VARIANCES, SUBJECT TO THESE PLANS BEING STAMPED, SIGNED, AND DATED BY THE PROFESSIONAL ENGINEER OF RECORD. REVIEW BY THE TOWN DOES NOT CONSTITUTE APPROVAL OF THE PLAN DESIGN OR ACCURACY AND CORRECTNESS OF ENGINEERING CALCULATIONS. ERRORS IN THE DESIGN OR CALCULATIONS REMAIN THE RESPONSIBILITY OF THE REGISTERED PROFESSIONAL ENGINEER WHOSE STAMP AND SIGNATURE ARE AFFIXED TO THIS DOCUMENT.

THIS REVIEW DOES NOT CONSTITUTE APPROVAL OF ANY PRIVATE ON-SITE IMPROVEMENTS WHICH MAY BE SHOWN. CONSTRUCTION CANNOT COMMENCE UNTIL ALL REQUIRED DRAINAGE/TRAFFIC REPORT(S), FINAL DEVELOPMENT PLAN(S), SPECIAL REVIEW(S), GRADING PERMIT, AND/OR OTHER PERMITS ARE COMPLETE, APPROVED AND ON FILE WITH THE TOWN OF PARKER.

TOWN OF PARKER, DIRECTOR OF ENGINEERING DATE

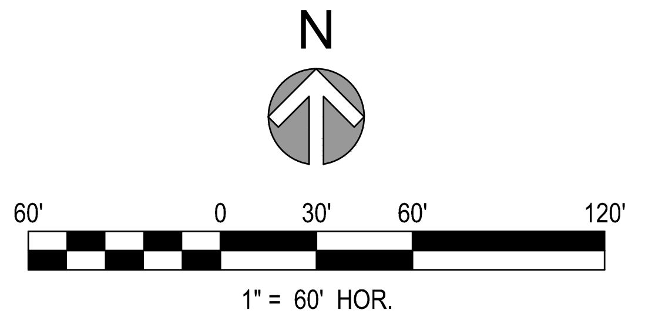
N
60'
0
30'
60'
120'
1" = 60' HOR.

811
Know what's below.
Call before you dig.

File Location:Q:\DEN\Projects\0950-00 Compark South\CAD\CDs\PICP\0950-EC.dwg Plot Date:9/12/2022 4:11 PM Last Saved By: KBLACK

MERRICK®
Engineering / Architecture / Design-Build / Surveying / Planning / Geospatial Solutions
5970 GREENWOOD PLAZA BLVD. GREENWOOD VILLAGE, CO. 80111
303-751-0741
www.merrick.com

CENTURY
— LIVING —

REV	REVISION DESCRIPTION	DATE	CHND	CHKD	APPR

COMPARK VILLAGE SOUTH
PRIVATE IMPROVEMENT CONSTRUCTION PLANS

INITIAL EROSION CONTROL 1

TITLE

COLORADO LICENSED PROFESSIONAL ENGINEER
KRISTOFER KYLE WIEST
46080
09/08/2022

PE STAMP

FOR AND ON BEHALF OF MERRICK & COMPANY

JOB NUMBER 65120950
DATE 7/1/2022
SHEET C5.0
31

THIS AND ANY OTHER ELECTRONIC MEDIA COUNTERPART IS AN INSTRUMENT OF SERVICE PREPARED BY MERRICK AND COMPANY FOR A DEFINED PROJECT. IT IS NOT INTENDED OR REPRESENTED TO BE SUITABLE FOR REUSE IN WHOLE OR IN PART ON EXTENSIONS OF THE PROJECT OR ON ANY OTHER PROJECT. REUSE OR MODIFICATION, OF ANY UTILIZATION IF NOT A FINISHED INSTRUMENT, WITHOUT THE PRIOR EXPRESS WRITTEN CONSENT OF MERRICK AND COMPANY SHALL BE AT THE SOLE RISK FOR THE UNAUTHORIZED USER WITHOUT LIABILITY OR LOSS EXPOSURE TO MERRICK AND COMPANY.

MATCH LINE SEE SHEET C5.0

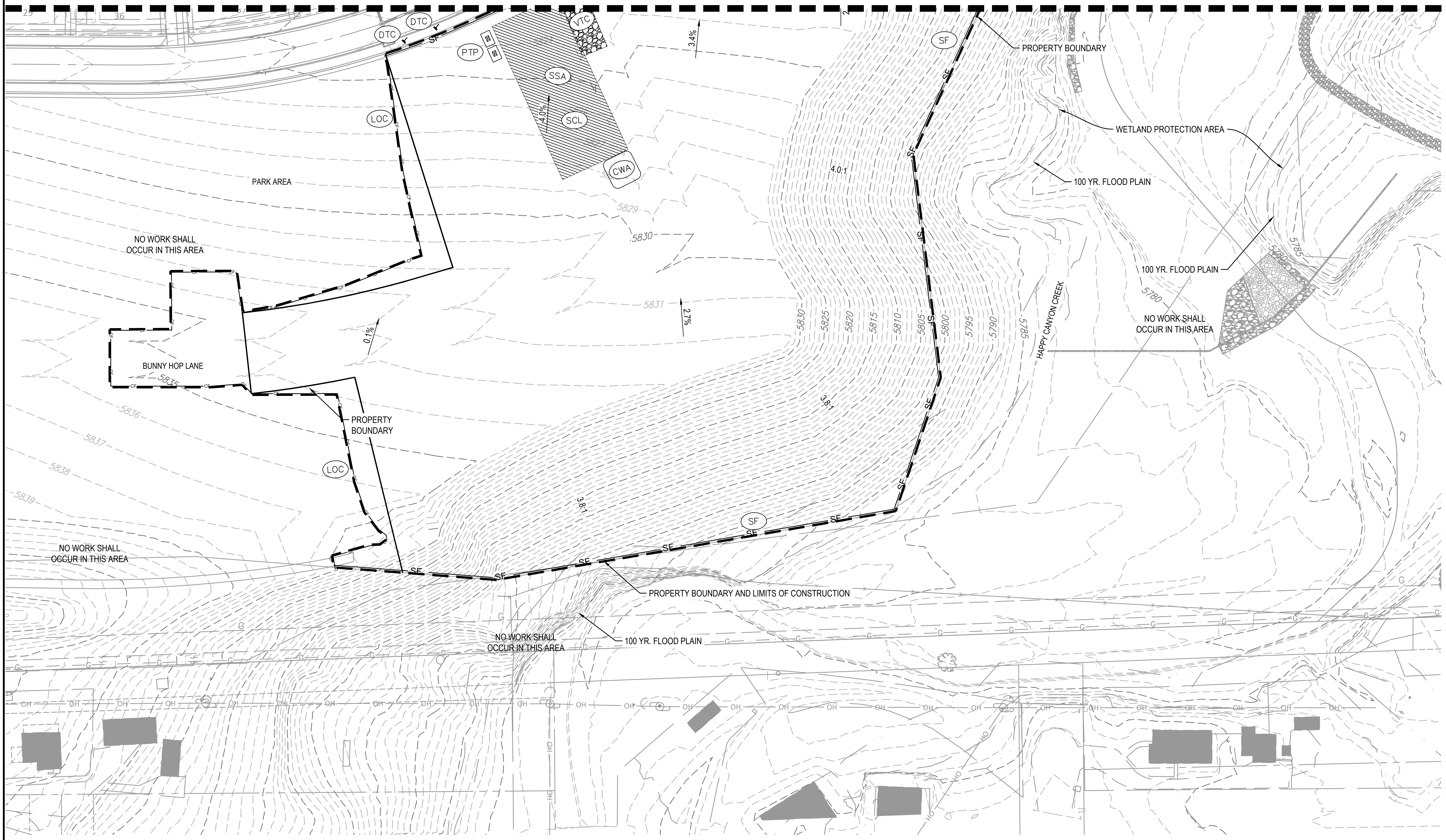
29
36
DTC
DTC
SF
PTP
VTC
SSA
SCL
CWA
3.4%
4.0%
LOC
PARK AREA
NO WORK SHALL OCCUR IN THIS AREA
5829
5830
5831
2.7%
0.1%
BUNNY HOP LANE
5835
5836
5837
5838
5839
PROPERTY BOUNDARY
LOC
NO WORK SHALL OCCUR IN THIS AREA
SF
4.0:1
3.8:1
3.8:1
5830
5825
5820
5815
5810
5805
5800
5795
5790
5785
PROPERTY BOUNDARY
WETLAND PROTECTION AREA
100 YR. FLOOD PLAIN
100 YR. FLOOD PLAIN
HAPPY CANYON CREEK
5780
5785
NO WORK SHALL OCCUR IN THIS AREA
PROPERTY BOUNDARY AND LIMITS OF CONSTRUCTION
NO WORK SHALL OCCUR IN THIS AREA
100 YR. FLOOD PLAIN
G
OH

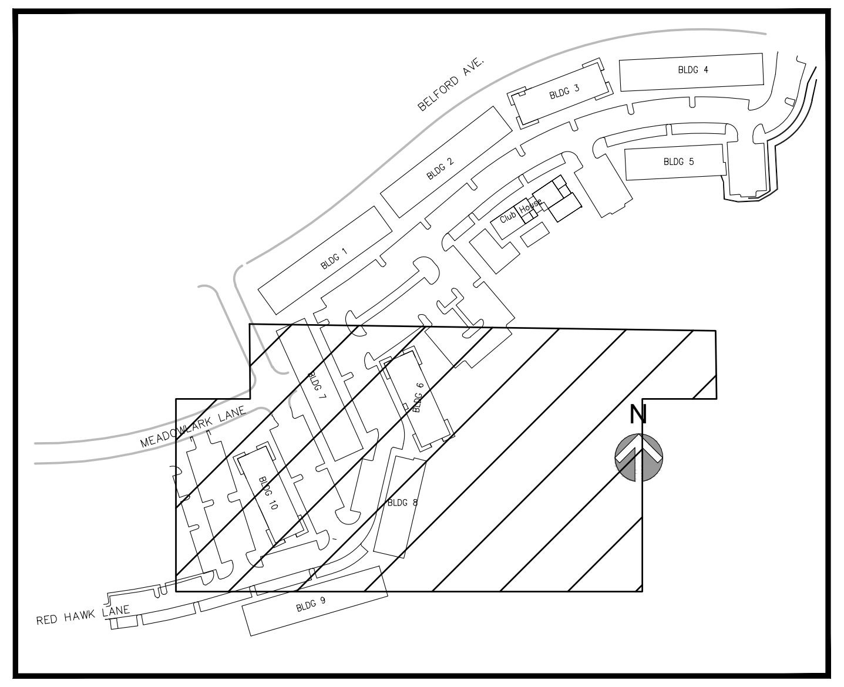
BELFORD AVE
BLDG
RED HAWK LANE
N

TEMPORARY BMP LEGEND:

—SF—	SF	SILT FENCE
—>—>—	DD	DIVERSION DITCH
▨	RS	ROCK SOCK
▭	IPCOS	INLET PROTECTION CURB ON SUMP
— — —	LOC	LIMITS OF CONSTRUCTION
▨	SSA	STABILIZED STAGING AREA
▩	ECB	EROSION CONTROL BLANKET
▨	SCL	SEDIMENT CONTROL LOG
⁘	SMC	SEEDING, MULCHING AND CRIMPING
▩	VTC	VEHICLE TRACKING CONTROL
▢	CWA	CONCRETE WASHOUT AREA
▭	TSB	SEDIMENT BASIN
✓	DTC	SEDIMENT BASIN
◠	STP	SIDEWALK TRANSITION PROTECTION
▦	MWP	MASON WORK PROTECTION PROTECTION
⬭	DP	DETENTION POND PROTECTION
⊓	IPCOG	INLET PROTECTION CURB ON GRADE

NOTES:

1. INTERIOR SILT FENCE SHOULD BE PLACED BY THE CONTRACTOR TO INTERMITTENTLY INTERCEPT GROUND FLOW. LOCATION TO BE BASED ON SITE CONDITIONS.
2. REFER TO EROSION CONTROL DETAILS (C8.0)
3. OWNER/CONTRACTOR MUST OBTAIN THE CDPS GENERAL PERMIT FROM THE COLORADO DEPARTMENT OF PUBLIC HEALTH AND ENVIRONMENT, WATER QUALITY CONTROL DIVISION.
4. THE TOWN OF PARKER'S "STANDARD EROSION AND SEDIMENT CONTROL CONSTRUCTION PLAN NOTES, FEBRUARY 2005" TAKE PRECEDENCE OVER THE "GENERAL EROSION CONTROL NOTES" WHENEVER THERE IS A QUESTION OR CONFLICT IN THE NOTES.
5. THE OWNER/CONTRACTOR MUST ADHERE AND ABIDE TO THE RULES AND REGULATIONS IMPOSED BY THE CITY OF LOVELAND.
6. SLOPE PROTECTION SHOULD BE ADDED TO ALL AREAS OF SLOPES GREATER THAN 4:1. CONTRACTOR TO USE "TRACKED" VEHICLE, RUN PERPENDICULAR TO SLOPE TO INHIBIT RILL/GULLEY EROSION, CONTRACTOR MAY USE OTHER WINDROW-TYPE METHODS AS APPROVED BY ENGINEER. TYPICAL ALL SLOPES, REPEAT AS NECESSARY UNTIL LANDSCAPING IS INSTALLED.
7. ALL VEHICLE SPEEDS SHALL BE LIMITED TO A MAXIMUM OF 25 MILES PER HOUR.
8. ALL UNPAVED ROADWAYS AND DISTURBED SURFACE AREAS SHALL BE WATERED AS NEEDED TO PREVENT FUGITIVE DUST EMISSIONS.
9. TO REDUCE THE POTENTIAL FOR CLOGGING OF DEBRIS GRATES, NO STRAW MULCH SHALL BE USED WITHIN THE EXCESS URBAN RUNOFF VOLUME OF A DETENTION BASIN. INSTEAD, EROSION CONTROL BLANKET SHALL BE INSTALLED FOR A WIDTH OF AT LEAST 6-FEET ON BOTH SIDES OF THE CONCRETE LOW FLOW CHANNELS OR UP TO A DEPTH OF 1-FOOT IN SOIL RIPRAP OR BENCHED LOW FLOW CHANNELS. ADDITIONALLY, HYDRAULICALLY-APPLIED WOOD FIBER MULCH, STABILIZED FIBER MATRIX, BONDED FIBER MATRIX, OR FLEXIBLE GROWTH MEDIUM SHALL BE USED IN ALL OTHER AREAS WITHIN THE EXCESS URBAN RUNOFF VOLUME OF THE DETENTION BASIN. THE BLANKET AND HYDRAULICALLY-APPLIED MULCH SHALL COMPLY WITH THE MATERIALS AND INSTALLATION REQUIREMENTS FOR EROSION CONTROL BLANKETS AS REQUIRED BY THE TOWN'S CBMP PROGRAM, AND WHERE APPLICABLE, THE PRODUCT MANUFACTURER."
10. LOT PROTECTION (LP) IS REQUIRED ON ALL RESIDENTIAL LOTS PRIOR TO ISSUANCE OF A CERTIFICATE OF OCCUPANCY
11. REFER TO LANDSCAPE PLANS FOR FINAL STABILIZATION IN NON-HARDSCAPED AREAS

THE TOWN OF PARKER REVIEW CONSTITUTES GENERAL COMPLIANCE WITH THE TOWN'S STANDARDS AND APPROVED VARIANCES, SUBJECT TO THESE PLANS BEING STAMPED, SIGNED, AND DATED BY THE PROFESSIONAL ENGINEER OF RECORD. REVIEW BY THE TOWN DOES NOT CONSTITUTE APPROVAL OF THE PLAN DESIGN OR ACCURACY AND CORRECTNESS OF ENGINEERING CALCULATIONS. ERRORS IN THE DESIGN OR CALCULATIONS REMAIN THE RESPONSIBILITY OF THE REGISTERED PROFESSIONAL ENGINEER WHOSE STAMP AND SIGNATURE ARE AFFIXED TO THIS DOCUMENT.

THIS REVIEW DOES NOT CONSTITUTE APPROVAL OF ANY PRIVATE ON-SITE IMPROVEMENTS WHICH MAY BE SHOWN. CONSTRUCTION CANNOT COMMENCE UNTIL ALL REQUIRED DRAINAGE/TRAFFIC REPORT(S), FINAL DEVELOPMENT PLAN(S), SPECIAL REVIEW(S), GRADING PERMIT, AND/OR OTHER PERMITS ARE COMPLETE, APPROVED AND ON FILE WITH THE TOWN OF PARKER.

TOWN OF PARKER, DIRECTOR OF ENGINEERING ____________ DATE

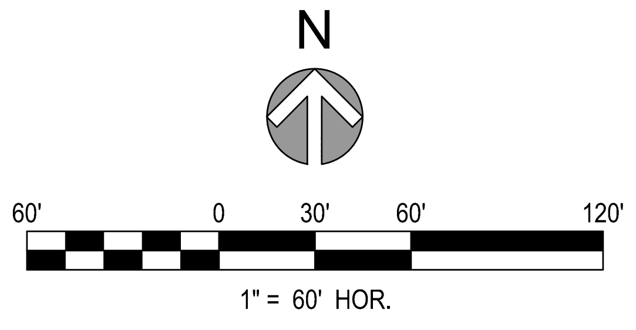
N
60'
0
30'
60'
120'
1" = 60' HOR.

811
Know what's below.
Call before you dig.

File Location:Q:\DEN\Projects\0950-00 Compark South\CAD\C3D\PICP\0950-EC.dwg Plot Date:9/12/2022 4:11 PM Last Saved By: KBLACK

MERRICK®
Engineering / Architecture / Design-Build / Surveying / Planning / Geospatial Solutions
5970 GREENWOOD PLAZA BLVD. GREENWOOD VILLAGE, CO. 80111
303-751-0741
www.merrick.com

CENTURY
— LIVING —

REV	REVISION DESCRIPTION	DATE	CHND	CHKD	APPR

TITLE
COMPARK VILLAGE SOUTH
PRIVATE IMPROVEMENT CONSTRUCTION PLANS
INITIAL EROSION CONTROL 2

PE STAMP
COLORADO LICENSED PROFESSIONAL ENGINEER
KRISTOFER KYLE WIEST
46080
09/08/2022
FOR AND ON BEHALF OF MERRICK & COMPANY

JOB NUMBER 65120950
DATE 7/1/2022
SHEET C5.1
32

THIS AND ANY OTHER ELECTRONIC MEDIA COUNTERPART IS AN INSTRUMENT OF SERVICE PREPARED BY MERRICK AND COMPANY FOR A DEFINED PROJECT. IT IS NOT INTENDED OR REPRESENTED TO BE SUITABLE FOR REUSE IN WHOLE OR IN PART ON EXTENSIONS OF THE PROJECT OR ON ANY OTHER PROJECT. REUSE OR MODIFICATION, OF ANY UTILIZATION IF NOT A FINISHED INSTRUMENT, WITHOUT THE PRIOR EXPRESS WRITTEN CONSENT OF MERRICK AND COMPANY SHALL BE AT THE SOLE RISK FOR THE UNAUTHORIZED USER WITHOUT LIABILITY OR LOSS EXPOSURE TO MERRICK AND COMPANY.

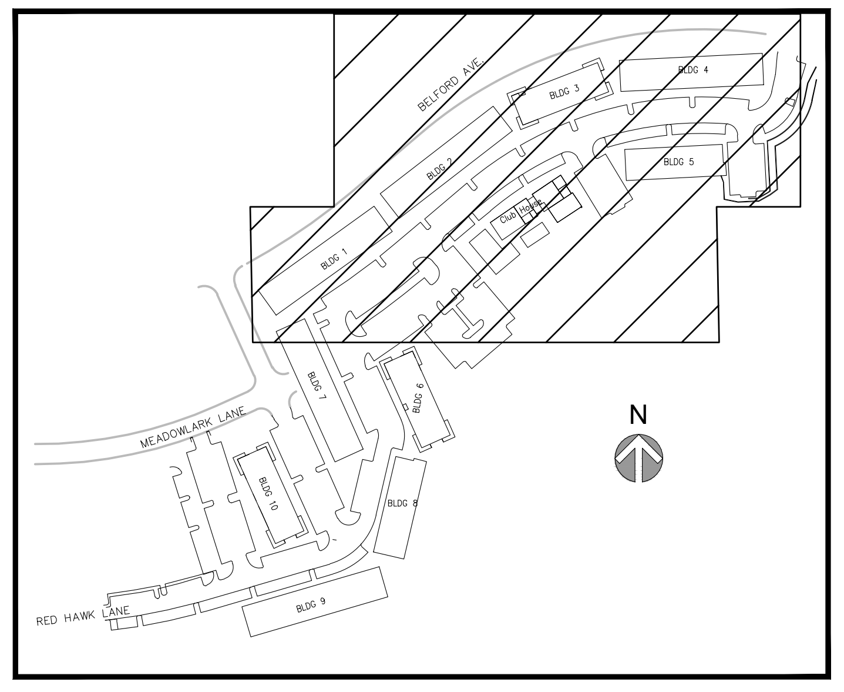
BELFORD AVE
MEADOWLARK LANE
RED HAWK LANE
BLDG 9
N

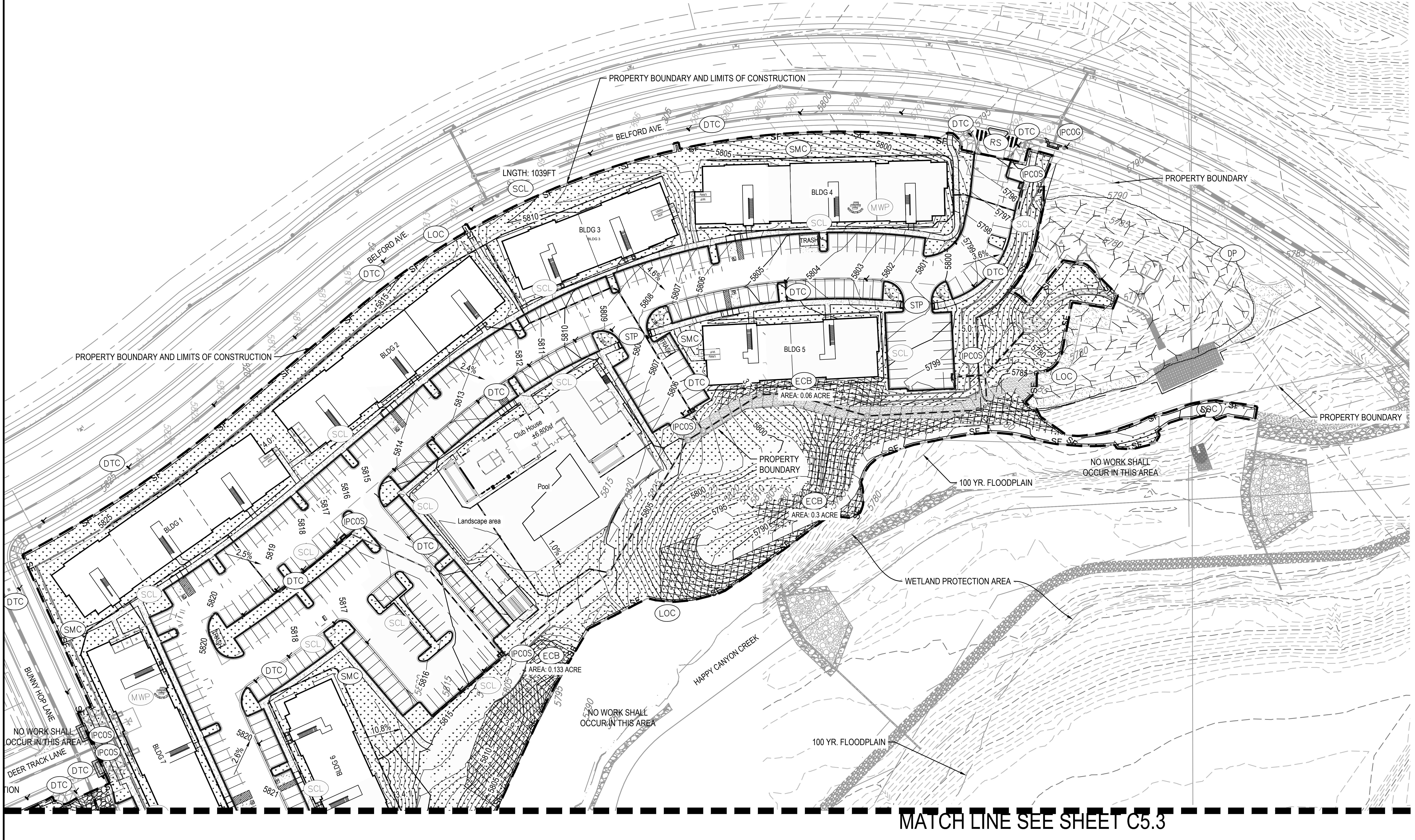
PROPERTY BOUNDARY AND LIMITS OF CONSTRUCTION
BELFORD AVE
LNGTH: 1039FT
SCL
LOC
DTC
RS
IPCOG
IPCOS
PROPERTY BOUNDARY
DP
BLDG 4
BLDG 3
MWP
SMC
TRASH
STP
BLDG 2
BLDG 5
ECB
AREA: 0.06 ACRE
LOC
Club House
Pool
Landscape area
PROPERTY BOUNDARY
100 YR. FLOODPLAIN
NO WORK SHALL OCCUR IN THIS AREA
PROPERTY BOUNDARY AND LIMITS OF CONSTRUCTION
BLDG 1
ECB
AREA: 0.3 ACRE
WETLAND PROTECTION AREA
HAPPY CANYON CREEK
ECB
AREA: 0.133 ACRE
NO WORK SHALL OCCUR IN THIS AREA
100 YR. FLOODPLAIN
BUNNY HOP LANE
NO WORK SHALL OCCUR IN THIS AREA
DEER TRACK LANE
BLDG 7
BLDG 6
SF
4.0%
2.5%
1.6%
10.8%
5.0%
MATCH LINE SEE SHEET C5.3

Know what's **below.**
Call before you dig.

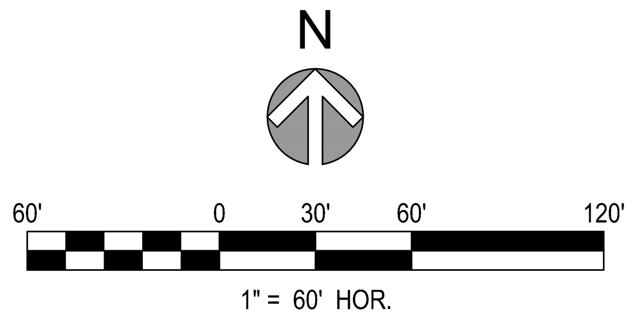
N
60'
0
30'
60'
120'
1" = 60' HOR.

TEMPORARY BMP LEGEND:

—— SF ——	SF	SILT FENCE
——>——>——	DD	DIVERSION DITCH
▨	RS	ROCK SOCK
	IPCOS	INLET PROTECTION CURB ON SUMP
▬ ▬ ▬ ▬	LOC	LIMITS OF CONSTRUCTION
▨	SSA	STABILIZED STAGING AREA
▩	ECB	EROSION CONTROL BLANKET
▨	SCL	SEDIMENT CONTROL LOG
	SMC	SEEDING, MULCHING AND CRIMPING
	VTC	VEHICLE TRACKING CONTROL
▢	CWA	CONCRETE WASHOUT AREA
	TSB	SEDIMENT BASIN
	DTC	SEDIMENT BASIN
	STP	SIDEWALK TRANSITION PROTECTION
	MWP	MASON WORK PROTECTION PROTECTION
	DP	DETENTION POND PROTECTION
	IPCOG	INLET PROTECTION CURB ON GRADE

NOTES:

1. INTERIOR SILT FENCE SHOULD BE PLACED BY THE CONTRACTOR TO INTERMITTENTLY INTERCEPT GROUND FLOW. LOCATION TO BE BASED ON SITE CONDITIONS.
2. REFER TO EROSION CONTROL DETAILS (C8.0)
3. OWNER/CONTRACTOR MUST OBTAIN THE CDPS GENERAL PERMIT FROM THE COLORADO DEPARTMENT OF PUBLIC HEALTH AND ENVIRONMENT, WATER QUALITY CONTROL DIVISION.
4. THE TOWN OF PARKER'S "STANDARD EROSION AND SEDIMENT CONTROL CONSTRUCTION PLAN NOTES, FEBRUARY 2005" TAKE PRECEDENCE OVER THE "GENERAL EROSION CONTROL NOTES" WHENEVER THERE IS A QUESTION OR CONFLICT IN THE NOTES.
5. THE OWNER/CONTRACTOR MUST ADHERE AND ABIDE TO THE RULES AND REGULATIONS IMPOSED BY THE CITY OF LOVELAND.
6. SLOPE PROTECTION SHOULD BE ADDED TO ALL AREAS OF SLOPES GREATER THAN 4:1. CONTRACTOR TO USE "TRACKED" VEHICLE, RUN PERPENDICULAR TO SLOPE TO INHIBIT RILL/GULLEY EROSION, CONTRACTOR MAY USE OTHER WINDROW-TYPE METHODS AS APPROVED BY ENGINEER. TYPICAL ALL SLOPES, REPEAT AS NECESSARY UNTIL LANDSCAPING IS INSTALLED.
7. ALL VEHICLE SPEEDS SHALL BE LIMITED TO A MAXIMUM OF 25 MILES PER HOUR.
8. ALL UNPAVED ROADWAYS AND DISTURBED SURFACE AREAS SHALL BE WATERED AS NEEDED TO PREVENT FUGITIVE DUST EMISSIONS.
9. TO REDUCE THE POTENTIAL FOR CLOGGING OF DEBRIS GRATES, NO STRAW MULCH SHALL BE USED WITHIN THE EXCESS URBAN RUNOFF VOLUME OF A DETENTION BASIN. INSTEAD, EROSION CONTROL BLANKET SHALL BE INSTALLED FOR A WIDTH OF AT LEAST 6-FEET ON BOTH SIDES OF THE CONCRETE LOW FLOW CHANNELS OR UP TO A DEPTH OF 1-FOOT IN SOIL RIPRAP OR BENCHED LOW FLOW CHANNELS. ADDITIONALLY, HYDRAULICALLY-APPLIED WOOD FIBER MULCH, STABILIZED FIBER MATRIX, BONDED FIBER MATRIX, OR FLEXIBLE GROWTH MEDIUM SHALL BE USED IN ALL OTHER AREAS WITHIN THE EXCESS URBAN RUNOFF VOLUME OF THE DETENTION BASIN. THE BLANKET AND HYDRAULICALLY-APPLIED MULCH SHALL COMPLY WITH THE MATERIALS AND INSTALLATION REQUIREMENTS FOR EROSION CONTROL BLANKETS AS REQUIRED BY THE TOWN'S CBMP PROGRAM, AND WHERE APPLICABLE, THE PRODUCT MANUFACTURER."
10. LOT PROTECTION (LP) IS REQUIRED ON ALL RESIDENTIAL LOTS PRIOR TO ISSUANCE OF A CERTIFICATE OF OCCUPANCY
11. REFER TO LANDSCAPE PLANS FOR FINAL STABILIZATION IN NON-HARDSCAPED AREAS

THE TOWN OF PARKER REVIEW CONSTITUTES GENERAL COMPLIANCE WITH THE TOWN'S STANDARDS AND APPROVED VARIANCES, SUBJECT TO THESE PLANS BEING STAMPED, SIGNED, AND DATED BY THE PROFESSIONAL ENGINEER OF RECORD. REVIEW BY THE TOWN DOES NOT CONSTITUTE APPROVAL OF THE PLAN DESIGN OR ACCURACY AND CORRECTNESS OF ENGINEERING CALCULATIONS. ERRORS IN THE DESIGN OR CALCULATIONS REMAIN THE RESPONSIBILITY OF THE REGISTERED PROFESSIONAL ENGINEER WHOSE STAMP AND SIGNATURE ARE AFFIXED TO THIS DOCUMENT.

THIS REVIEW DOES NOT CONSTITUTE APPROVAL OF ANY PRIVATE ON-SITE IMPROVEMENTS WHICH MAY BE SHOWN. CONSTRUCTION CANNOT COMMENCE UNTIL ALL REQUIRED DRAINAGE/TRAFFIC REPORT(S), FINAL DEVELOPMENT PLAN(S), SPECIAL REVIEW(S), GRADING PERMIT, AND/OR OTHER PERMITS ARE COMPLETE, APPROVED AND ON FILE WITH THE TOWN OF PARKER.

TOWN OF PARKER, DIRECTOR OF ENGINEERING ______ DATE ______

MERRICK®
Engineering / Architecture / Design-Build / Surveying / Planning / Geospatial Solutions
5970 GREENWOOD PLAZA BLVD. GREENWOOD VILLAGE, CO. 80111
303-751-0741
www.merrick.com

CENTURY
— LIVING —

REV	REVISION DESCRIPTION	DATE	CHND	CHKD	APPR

TITLE

COMPARK VILLAGE SOUTH
PRIVATE IMPROVEMENT
CONSTRUCTION PLANS

INTERIM FINAL EROSION CONTROL 1

PE STAMP
KRISTOFER KYLE WIEST
46080
09/08/2022
FOR AND ON BEHALF OF MERRICK & COMPANY

JOB NUMBER 65120950
DATE 7/1/2022
SHEET C5.2
33

File Location:Q:\DEN\Projects\0950-00 Compark South\CAD\CDs\PICP\0950-EC.dwg Plot Date:9/12/2022 4:12 PM Last Saved By: KBLACK

THIS AND ANY OTHER ELECTRONIC MEDIA COUNTERPART IS AN INSTRUMENT OF SERVICE PREPARED BY MERRICK AND COMPANY FOR A DEFINED PROJECT. IT IS NOT INTENDED OR REPRESENTED TO BE SUITABLE FOR REUSE IN WHOLE OR IN PART ON EXTENSIONS OF THE PROJECT OR ON ANY OTHER PROJECT. REUSE OR MODIFICATION, OF ANY UTILIZATION IF NOT A FINISHED INSTRUMENT, WITHOUT THE PRIOR EXPRESS WRITTEN CONSENT OF MERRICK AND COMPANY SHALL BE AT THE SOLE RISK FOR THE UNAUTHORIZED USER WITHOUT LIABILITY OR LOSS EXPOSURE TO MERRICK AND COMPANY.

MATCH LINE SEE SHEET C5.2

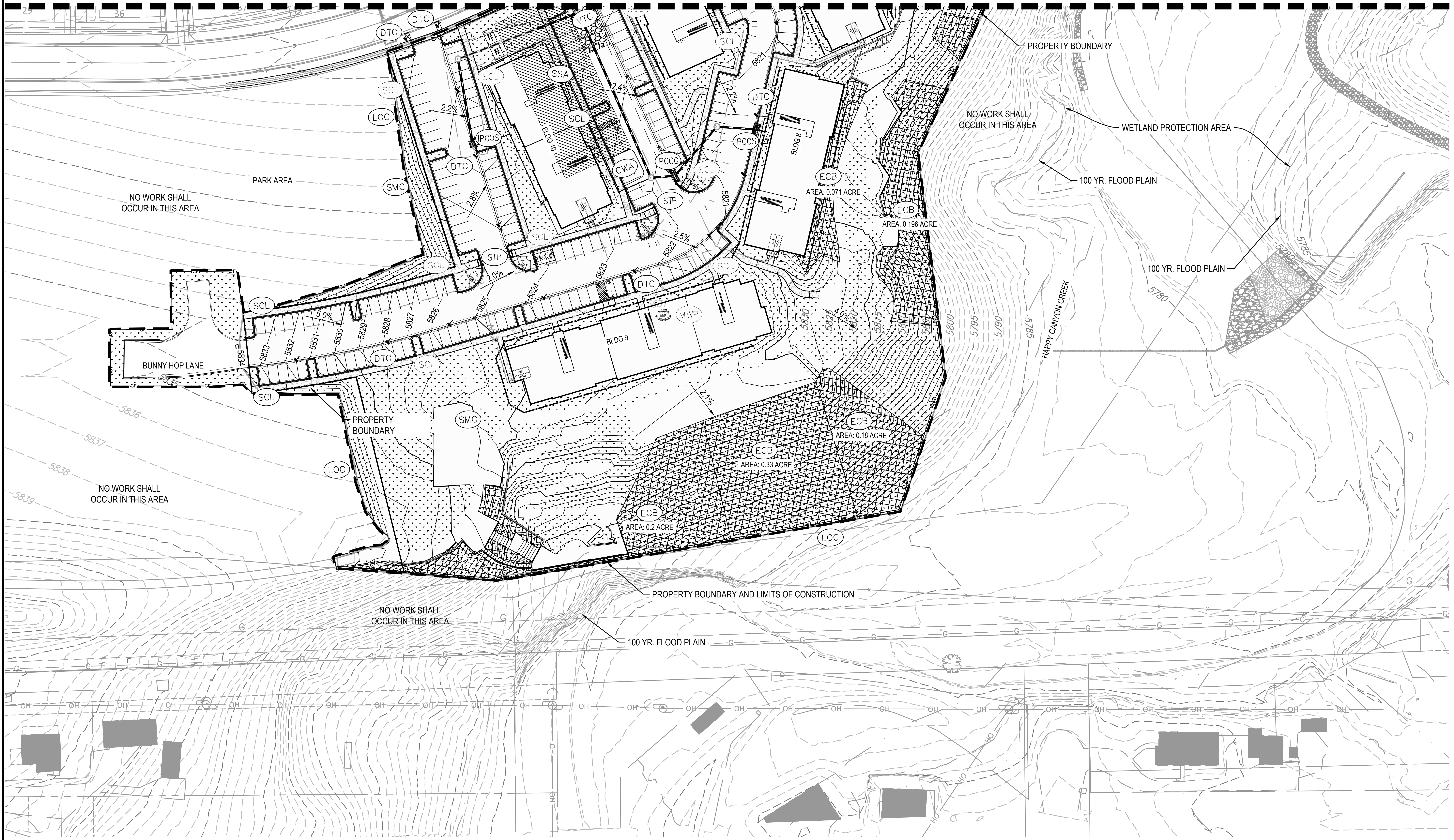
DTC
DTC
VTC
SSA
SCL
SCL
LOC
2.2%
IPCOS
BLDG 10
2.4%
CWA
IPCOG
IPCOS
DTC
BLDG 8
5821
ECB
AREA: 0.071 ACRE
ECB
AREA: 0.196 ACRE
STP
2.5%
STP
2.0%
DTC
5822
5823
5824
5825
5826
5827
5828
5829
5830
5831
5832
5833
5834
MWP
BLDG 9
2.1%
PARK AREA
NO WORK SHALL OCCUR IN THIS AREA
SMC
SCL
BUNNY HOP LANE
SCL
PROPERTY BOUNDARY
SMC
LOC
ECB
AREA: 0.18 ACRE
ECB
AREA: 0.33 ACRE
ECB
AREA: 0.2 ACRE
LOC
5836
5837
5838
5839
PROPERTY BOUNDARY
NO WORK SHALL OCCUR IN THIS AREA
WETLAND PROTECTION AREA
100 YR. FLOOD PLAIN
100 YR. FLOOD PLAIN
HAPPY CANYON CREEK
5800
5795
5790
5785
5780
PROPERTY BOUNDARY AND LIMITS OF CONSTRUCTION
NO WORK SHALL OCCUR IN THIS AREA
100 YR. FLOOD PLAIN
NO WORK SHALL OCCUR IN THIS AREA

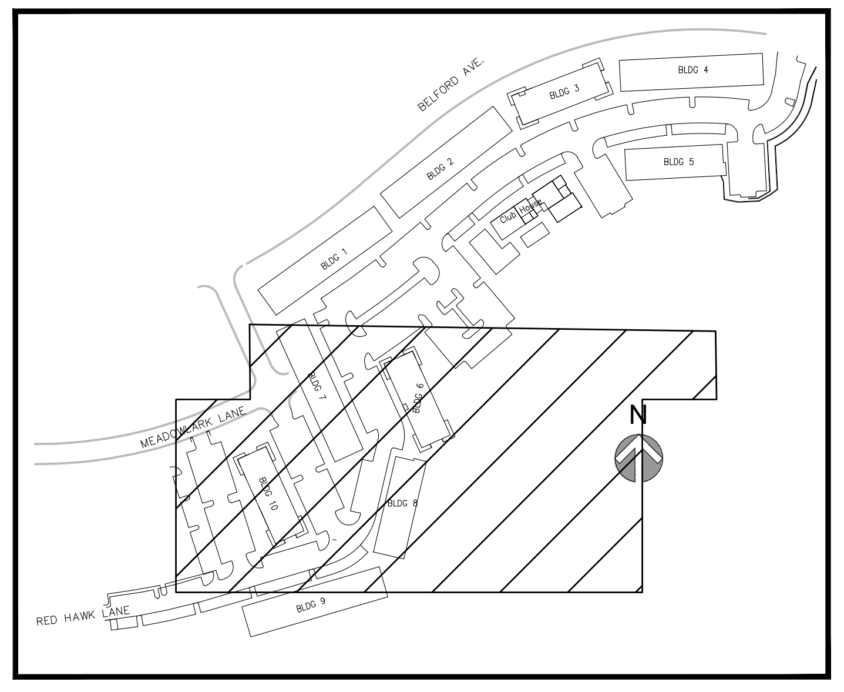
BLDG 1
BLDG 2
BLDG 3
BLDG 4
BLDG 5
BLDG 6
MEADOW LARK LANE
RED HAWK LANE
N

TEMPORARY BMP LEGEND:

—— SF ——	SF	SILT FENCE
—>——>—	DD	DIVERSION DITCH
▨	RS	ROCK SOCK
▭	IPCOS	INLET PROTECTION CURB ON SUMP
— — — —	LOC	LIMITS OF CONSTRUCTION
▨	SSA	STABILIZED STAGING AREA
▩	ECB	EROSION CONTROL BLANKET
▨	SCL	SEDIMENT CONTROL LOG
⠿	SMC	SEEDING, MULCHING AND CRIMPING
▩	VTC	VEHICLE TRACKING CONTROL
▢	CWA	CONCRETE WASHOUT AREA
▭	TSB	SEDIMENT BASIN
✓	DTC	SEDIMENT BASIN
◠	STP	SIDEWALK TRANSITION PROTECTION
◠	MWP	MASON WORK PROTECTION PROTECTION
⬭	DP	DETENTION POND PROTECTION
⊓	IPCOG	INLET PROTECTION CURB ON GRADE

NOTES:

1. INTERIOR SILT FENCE SHOULD BE PLACED BY THE CONTRACTOR TO INTERMITTENTLY INTERCEPT GROUND FLOW. LOCATION TO BE BASED ON SITE CONDITIONS.
2. REFER TO EROSION CONTROL DETAILS (C8.0)
3. OWNER/CONTRACTOR MUST OBTAIN THE CDPS GENERAL PERMIT FROM THE COLORADO DEPARTMENT OF PUBLIC HEALTH AND ENVIRONMENT, WATER QUALITY CONTROL DIVISION.
4. THE TOWN OF PARKER'S "STANDARD EROSION AND SEDIMENT CONTROL CONSTRUCTION PLAN NOTES, FEBRUARY 2005" TAKE PRECEDENCE OVER THE "GENERAL EROSION CONTROL NOTES" WHENEVER THERE IS A QUESTION OR CONFLICT IN THE NOTES.
5. THE OWNER/CONTRACTOR MUST ADHERE AND ABIDE TO THE RULES AND REGULATIONS IMPOSED BY THE CITY OF LOVELAND.
6. SLOPE PROTECTION SHOULD BE ADDED TO ALL AREAS OF SLOPES GREATER THAN 4:1. CONTRACTOR TO USE "TRACKED" VEHICLE, RUN PERPENDICULAR TO SLOPE TO INHIBIT RILL/GULLEY EROSION, CONTRACTOR MAY USE OTHER WINDROW-TYPE METHODS AS APPROVED BY ENGINEER. TYPICAL ALL SLOPES, REPEAT AS NECESSARY UNTIL LANDSCAPING IS INSTALLED.
7. ALL VEHICLE SPEEDS SHALL BE LIMITED TO A MAXIMUM OF 25 MILES PER HOUR.
8. ALL UNPAVED ROADWAYS AND DISTURBED SURFACE AREAS SHALL BE WATERED AS NEEDED TO PREVENT FUGITIVE DUST EMISSIONS.
9. TO REDUCE THE POTENTIAL FOR CLOGGING OF DEBRIS GRATES, NO STRAW MULCH SHALL BE USED WITHIN THE EXCESS URBAN RUNOFF VOLUME OF A DETENTION BASIN. INSTEAD, EROSION CONTROL BLANKET SHALL BE INSTALLED FOR A WIDTH OF AT LEAST 6-FEET ON BOTH SIDES OF THE CONCRETE LOW FLOW CHANNELS OR UP TO A DEPTH OF 1-FOOT IN SOIL RIPRAP OR BENCHED LOW FLOW CHANNELS. ADDITIONALLY, HYDRAULICALLY-APPLIED WOOD FIBER MULCH, STABILIZED FIBER MATRIX, BONDED FIBER MATRIX, OR FLEXIBLE GROWTH MEDIUM SHALL BE USED IN ALL OTHER AREAS WITHIN THE EXCESS URBAN RUNOFF VOLUME OF THE DETENTION BASIN. THE BLANKET AND HYDRAULICALLY-APPLIED MULCH SHALL COMPLY WITH THE MATERIALS AND INSTALLATION REQUIREMENTS FOR EROSION CONTROL BLANKETS AS REQUIRED BY THE TOWN'S CBMP PROGRAM, AND WHERE APPLICABLE, THE PRODUCT MANUFACTURER.”
10. LOT PROTECTION (LP) IS REQUIRED ON ALL RESIDENTIAL LOTS PRIOR TO ISSUANCE OF A CERTIFICATE OF OCCUPANCY
11. REFER TO LANDSCAPE PLANS FOR FINAL STABILIZATION IN NON-HARDSCAPED AREAS

THE TOWN OF PARKER REVIEW CONSTITUTES GENERAL COMPLIANCE WITH THE TOWN’S STANDARDS AND APPROVED VARIANCES, SUBJECT TO THESE PLANS BEING STAMPED, SIGNED, AND DATED BY THE PROFESSIONAL ENGINEER OF RECORD. REVIEW BY THE TOWN DOES NOT CONSTITUTE APPROVAL OF THE PLAN DESIGN OR ACCURACY AND CORRECTNESS OF ENGINEERING CALCULATIONS. ERRORS IN THE DESIGN OR CALCULATIONS REMAIN THE RESPONSIBILITY OF THE REGISTERED PROFESSIONAL ENGINEER WHOSE STAMP AND SIGNATURE ARE AFFIXED TO THIS DOCUMENT.

THIS REVIEW DOES NOT CONSTITUTE APPROVAL OF ANY PRIVATE ON-SITE IMPROVEMENTS WHICH MAY BE SHOWN. CONSTRUCTION CANNOT COMMENCE UNTIL ALL REQUIRED DRAINAGE/TRAFFIC REPORT(S), FINAL DEVELOPMENT PLAN(S), SPECIAL REVIEW(S), GRADING PERMIT, AND/OR OTHER PERMITS ARE COMPLETE, APPROVED AND ON FILE WITH THE TOWN OF PARKER.

TOWN OF PARKER, DIRECTOR OF ENGINEERING DATE

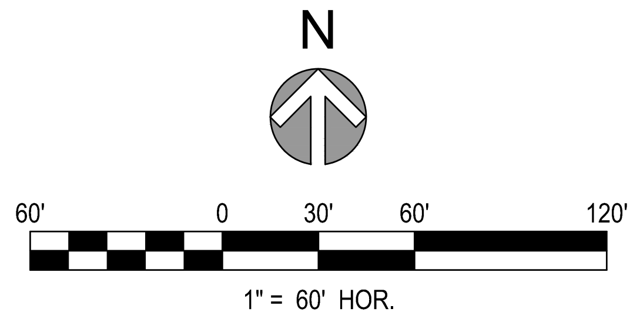
N
60'
0
30'
60'
120'
1" = 60' HOR.

811
Know what's below.
Call before you dig.

File Location:Q:\DEN\Projects\0950-00 Compark South\CAD\CDs\PICP\0950-EC.dwg Plot Date:9/12/2022 4:12 PM Last Saved By: KBLACK

MERRICK®
Engineering | Architecture | Design-Build | Surveying | Planning | Geospatial Solutions
5970 GREENWOOD PLAZA BLVD. GREENWOOD VILLAGE, CO. 80111
303-751-0741
www.merrick.com

CENTURY
— LIVING —

REV	REVISION DESCRIPTION	DATE	CHND	CHKD	APPR

TITLE
COMPARK VILLAGE SOUTH
PRIVATE IMPROVEMENT CONSTRUCTION PLANS
INTERIM FINAL EROSION CONTROL 2

PE STAMP
46080
09/08/2022
FOR AND ON BEHALF OF MERRICK & COMPANY

JOB NUMBER 65120950
DATE 7/1/2022
SHEET C5.3
34