WATER MAIN CROSSING UNDER E-470 CONSTRUCTION PLANS
FOR
COMPARK VILLAGE SOUTH, FILING NO. 1
PARKER, COLORADO

THE WEST LINE OF THE SOUTHWEST QUARTER OF SECTION 6, TOWNSHIP 6 SOUTH, RANGE 66 WEST OF THE SIXTH PRINCIPAL MERIDIAN BEING MONUMENTED AS SHOWN HEREON HAVING A BEARING OF NORTH 00°29'49" WEST, AS DETERMINED BY GPS OBSERVATION FROM NGS CONTROL POINTS IN THE COLORADO CENTRAL ZONE, STATE PLANE COORDINATE SYSTEM TOWN OF PARKER, COUNTY OF DOUGLAS, STATE OF COLORADO

STONEGATE VILLAGE METRO DISTRICT
WATER AND SANITARY SEWER PLAN

AGENCY CONTACT LIST

470 COMPARK, LLC
MICHAEL VICKERS
290 FILLMORE ST #1A
DENVER, CO 80206 — 303-881-6292

MANHARD CONSULTING
RICK MOORE, P.E.
7600 E ORCHARD ROAD, SUITE 150-N
GREENWOOD VILLAGE, CO 80111 — 303-531-3500

PARKER PUBLIC WORKS
20120 E. MAINSTREET
PARKER, CO. 80138 — 303-840-9546
STREETS - ALEX MESTDAGH
STORM WATER - JACOB JAMES
EROSION CONTROL - KURT PATRICK
LIFE SAFETY - RANDY CAPRA

TOWN OF PARKER POLICE DEPARTMENT
19,600 E. PARKER SQUARE DR.
PARKER, CO. 80134 — 303-841-9800

STONEGATE VILLAGE METRO DISTRICT
DISTRICT ENGINEER:
SCOTT BARNETT
MULHERN MRE, INC.
2 INVERNESS DRIVE EAST. SUITE 200
ENGLEWOOD, CO 80112 — 303-858-9909

DISTRICT MANAGER:
SEAN CHAMBERS
10252 STONEGATE PARKWAY
PARKER, CO 80134 — 303-858-9909

SOUTH METRO FIRE RESCUE AUTHORITY
MICHELLE HERIAN
9195 E. MINERAL AVE.
CENTENNIAL, CO 80112 — 720-488-7200

UTILITY NOTIFICATION COMPANY OF COLORADO
2801 SOUTH YOUNGFIELD ST, SUITE 301
GOLDEN, CO 80401 — 1-800-922-1987
LOCAL CALLS — (811)

XCEL ENERGY
MICHELLE O'NAN
5909 E. 38TH AVE.
DENVER, CO 80207 — 303-329-1618
720-490-3867

COMCAST
KEVIN YOUNG
6850 S. TUCSON WAY
ENGLEWOOD, CO 80112

QWEST
WILLIAM BENSON
9750 E. COSTILLA AVE.
ENGLEWOOD, CO 80112 — 303-792-6069

COLORADO DEPARTMENT OF HEALTH
4210 E. 11TH AVE.
DENVER, CO 80220
303-320-8333

INTERMOUNTAIN RURAL ELECTRIC ASSOCIATION
BROOKS KAUFMAN
5496 NORTH US HWY 85
P.O. BOX DRAWER A — 303-688-3100
SEDALIA, CO 80135

SOUTH METRO WATER SUPPLY AUTHORITY
RICHARD MARSICEK
8400 E PRENTICE AVE, SUITE 315
GREENWOOD VILLAGE, CO 80111 — 720-216-5158

E-470 PUBLIC HIGHWAY AUTHORITY
MANAGER OF LAND MANAGEMENT:
MICHELI WATSON
22470 EAST 6TH PARKWAY, SUITE 100
AURORA, CO 80016 — 303-537-3747

BENCHMARKS: (COMPARK SOUTH)

SOURCE BENCHMARKS:
DOUGLAS COUNTY BM 1.115010
A DOUGLAS COUNTY GIS MONUMENT SET IN CONCRETE LOCATED APPROXIMATELY 130 FEET SOUTHWESTERLY OF THE CENTERLINE OF CHAMBERS ROAD AND 95 FEET NORTHWESTERLY OF THE CENTERLINE OF COMPARK BOULEVARD.
ELEVATION = 5752.84 (NAVD 88)

SITE BENCHMARKS:
1. A NO. 5 REBAR WITH 2" ALUMINUM CAP STAMPED "LS 28286, 2001" FOUND AT THE SOUTHEAST CORNER OF SECTION 6, T6S, R66W LOCATED ON THE WEST LINE OF FIRST STREET APPROXIMATELY 1000 FEET NORTH OF ELM AVENUE.
ELEVATION = 5845.51
2. A 2.5" IRON PIPE WITH 3.25" ALUMINUM CAP STAMPED "PLS 12405, 1997" FOUND AT THE SOUTHEAST CORNER OF SECTION 6, T6S, R66W LOCATED APPROXIMATELY 960 FEET NORTH OF THE CENTERLINE OF AVENTERRA PARKWAY AND APPROXIMATELY 1050 FEET WEST OF THE CENTERLINE OF CHAMBERS ROAD.
ELEVATION = 5808.06

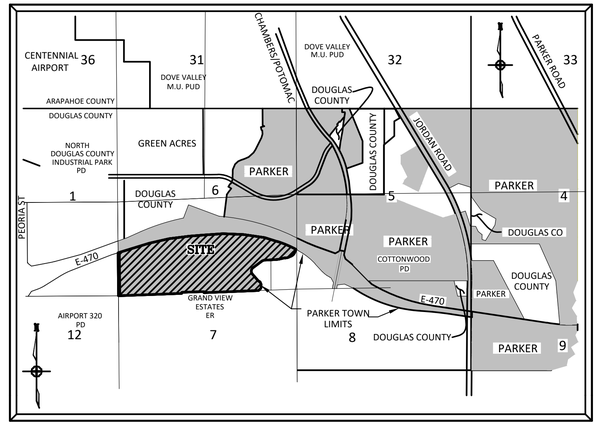

VICINITY MAP
N.T.S.

WATER MAIN QUANTITIES

1	8" PVC Water Main	8	L.F.	$37.00
2	12" PVC Water Main	682	L.F.	$48.35
3	12" Gate Valve and Box	2	Each	$2,546.92
4	12" Plug w/ BO	3	Each	$1,730.33
5	12" x 12" Tee w/ KB	2	Each	$1,330.36
6	12"x 8" Reducer	1	Each	$600.00
7	12" 45 Degree Bend	1	Each	$695.50
8	12" 11.25 Degree Bend	1	Each	$695.50
9	Fire Hydrant Assembly	1	Each	$6,600.51
10	24" Bore/Steel Casing - E-470 Crossing	386	L.F.	$586.00
11	Connection to Existing Water Line	2	Each	$10,678.22

I HEREBY AFFIRM THAT THESE CONSTRUCTION PLANS WERE PREPARED BY ME OR UNDER MY DIRECT SUPERVISION.

FOR AND ON BEHALF OF MANHARD CONSULTING

Know what's below. Call before you dig.

TOWN OF PARKER BUILDING DEPT FIRE LIFE SAFETY APPROVAL

ALL FIRE HYDRANTS SHALL BE INSTALLED ACCORDING TO WATER UTILITY STANDARDS. THE NUMBER AND LOCATIONS OF THE FIRE HYDRANTS AS SHOWN ON THE OVERALL UTILITY PLAN ARE CORRECT AS SPECIFIED BY THE TOWN OF PARKER, COMMUNITY DEVELOPMENT DEPARTMENT.

BY:

(SIGNATURE OF FIRE CODE OFFICIAL OR DESIGNATED REPRESENTATIVE)

DATE SIGNED

NOTE: UNDERGROUND FIRE LINE (UFL) SUBMITTAL DOCUMENTS MUST MEET THE REQUIREMENTS OF NFPA 24 WHEN SUBMITTING FOR REVIEW

DISTRICT APPROVALS

THESE DESIGNS, PLANS, AND CONTRACT DOCUMENTS ARE REVIEWED FOR CONCEPT AND GENERAL CONFORMANCE TO THE DISTRICT'S MINIMUM STANDARDS ONLY, AND THE PRIMARY RESPONSIBILITY FOR DESIGN ADEQUACY IS TO REMAIN WITH THE ENGINEER OF RECORD. THIS REVIEW DOES NOT IMPLY RESPONSIBILITY BY EITHER THE STONEGATE VILLAGE METROPOLITAN DISTRICT OR THE DISTRICT ENGINEER FOR COMPLETENESS, ACCURACY OR CORRECTNESS OF CALCULATIONS. THE REVIEW DOES NOT IMPLY THAT QUANTITIES OF ITEMS INDICATED ON THE PLANS ARE THE FINAL QUANTITIES REQUIRED. THE REVIEW SHALL NOT BE CONSTRUED FOR ANY REASON AS ACCEPTANCE OF FINANCIAL RESPONSIBILITY BY THE STONEGATE VILLAGE METROPOLITAN DISTRICT FOR ADDITIONAL ITEMS AND ADDITIONAL QUANTITIES OF ITEMS SHOWN THAT MAY BE REQUIRED DURING THE CONSTRUCTION PHASE.

APPROVED FOR CONSTRUCTION WITHIN ONE YEAR OF THE EARLIEST OF THESE DATES:

BY _____ _____
STONEGATE VILLAGE METROPOLITAN DISTRICT ENGINEER — DATE

BY _____ _____
STONEGATE VILLAGE METROPOLITAN DISTRICT MANAGER — DATE

DRAWN BY | REVISIONS | DATE

Manhard CONSULTING LTD
7600 East Orchard Road, Suite 150-N, Greenwood Village, CO 80111 ph:303.708.0500 manhard.com
Civil Engineering & Surveying Water Resource Management Construction Management

COMPARK VILLAGE SOUTH, FILING NO 1
TOWN OF PARKER, COLORADO
COVER SHEET

PROJ. MGR.: RJM
PROJ. ASSOC.: GTI
DRAWN BY: STAFF
DATE: 7/2019
SHEET 1 OF 9

PENDING APPROVAL - NOT FOR CONSTRUCTION

© 2018 MANHARD CONSULTING, LTD. ALL RIGHTS RESERVED

Plotted: 10/22/2019 2:36 PM Dwg Name: P:\Ccpkc3\ComSouth04-Master San & Water\dwg\Eng\Final Drawings\Plan Set\Offsite\CCPKC3 Waterline Bore\Construction Plans\COVER.dwg Updated By: SKobab

GENERAL NOTES:

1. ALL CONSTRUCTION SHALL COMPLY WITH STONEGATE VILLAGE METROPOLITAN DISTRICT SPECIFICATIONS.

2. THE CONTRACTOR SHALL CONTACT ALL APPROPRIATE UTILITY COMPANIES, THE TOWN OF PARKER , DOUGLAS COUNTY, AND THE DISTRICT ENGINEER PRIOR TO THE BEGINNING OF ANY CONSTRUCTION. CONTRACTOR SHALL BE RESPONSIBLE FOR LOCATING ANY EXISTING UTILITY (INCLUDING DEPTHS) WHICH MAY CONFLICT WITH THE PROPOSED CONSTRUCTION. ALL EXISTING UTILITIES SHALL BE PROTECTED FROM DAMAGE BY THE CONTRACTOR. DAMAGED UTILITIES SHALL BE REPAIRED BY THE CONTRACTOR AT HIS/HER OWN EXPENSE.

   ALL ITEMS SHOWN ON THE PLANS AS EXISTING ARE SHOWN IN APPROXIMATE LOCATIONS ONLY. THE ACTUAL LOCATIONS MAY VARY FROM THE PLANS, ESPECIALLY IN THE CASE OF UNDERGROUND UTILITIES. WHENEVER CONTRACTOR DISCOVERS A DISCREPANCY IN LOCATIONS, HE/SHE SHALL CONTACT THE ENGINEER IMMEDIATELY.

3. THE DISTRICT ENGINEER AND OTHER APPROVING AGENCIES ARE TO BE NOTIFIED AT LEAST 48-HOURS PRIOR TO CONSTRUCTION.

4. THE CONTRACTOR SHALL OBTAIN, AT HIS/HER EXPENSE, ALL PERMITS WHICH ARE NECESSARY TO PERFORM THE PROPOSED WORK.

5. ALL CONCRETE SHALL BE A MINIMUM OF CLASS A, 6 SACK, TYPE II, 3,000-POUND COMPRESSION STRENGTH.

6. THE DESIGN ENGINEER SHALL SUBMIT ONE SET OF ROLLED "AS-BUILT" BLUELINE PRINTS AND ELECTRONIC FILES TO THE DISTRICT ENGINEER FOR APPROVAL PRIOR TO PRINTING MYLAR SEPIAS FOR THE DISTRICT. AFTER APPROVAL HAS BEEN GRANTED BY THE DISTRICT ENGINEER, FULL SIZE MYLAR SEPIA PRINTS SHALL BE TRANSMITTED TO THE STONEGATE VILLAGE METROPOLITAN DISTRICT OFFICE AND AN ADDITIONAL SET OF ROLLED BLUELINE PRINTS SHALL BE TRANSMITTED TO THE DISTRICT ENGINEER'S OFFICE PRIOR TO PROBATIONARY ACCEPTANCE.

7. ALL BACKFILL MATERIAL SHALL BE COMPACTED TO 95% STANDARD PROCTOR DENSITY. COMPACTION TESTS MUST BE SUBMITTED TO DISTRICT ENGINEER PRIOR TO PROBATIONARY ACCEPTANCE.

8. TRENCHES SHALL BE EXCAVATED AND THE PIPE EXPOSED FOR THE INSPECTION AT ANY LOCATION ON THE PROJECT IF SO ORDERED BY THE INSPECTOR.

9. THE CONTRACTOR WILL BE HELD RESPONSIBLE FOR THE PROPER FUNCTIONING OF LINES (WATER AND SEWER) FOR UP TO 1-YEAR FROM THE DATE OF PROBATIONARY ACCEPTANCE OF THE LINES BY THE DISTRICT. ANY MALFUNCTION DURING THIS PERIOD OF GUARANTEE SHALL BE REMEDIED BY THE CONTRACTOR TO THE SATISFACTION OF THE DISTRICT ENGINEER AT NO EXPENSE TO THE DISTRICT.

10. SURFACE GRADES ARE TO BE WITHIN PLUS OR MINUS 1-FOOT OF FINISHED GRADE AND VERIFICATION OF COMPACTION RESULTS OBTAINED PRIOR TO THE INSTALLATION OF WATER AND SEWER LINES. RESULTS MUST BE SUBMITTED TO THE DISTRICT ENGINEER.

11. NO WORK SHALL BE BACKFILLED UNTIL THE CONSTRUCTION HAS BEEN INSPECTED AND APPROVED FOR BACKFILLING BY THE DISTRICT ENGINEER OR REPRESENTATIVE OF THE DISTRICT ENGINEER.

12. GRADING IS REQUIRED TO BE ADVANCED TO AT LEAST SUBGRADE LEVEL PRIOR TO UTILITY INSTALLATION. SURVEYOR CONFIRMATION IS REQUIRED.

WATER MAIN NOTES

1. ALL MATERIALS AND WORKMANSHIP SHALL BE IN CONFORMANCE WITH THE STONEGATE VILLAGE METROPOLITAN DISTRICT ENGINEERING STANDARDS AND SPECIFICATIONS, LATEST REVISION. ALL WORK SHALL BE INSPECTED AND APPROVED BY PERSONNEL OF THE STONEGATE VILLAGE METROPOLITAN DISTRICT AND THE DISTRICT ENGINEER.

2. ALL WATER MAINS SHALL BE CLASS 50 DUCTILE IRON PIPE (AWWA C-151-71) OR PVC 6-INCH THROUGH 12-INCH C-900 CLASS 200. ALL JOINTS AND FITTINGS SHALL BE IN ACCORDANCE WITH THE STONEGATE VILLAGE METROPOLITAN DISTRICT STANDARDS AND SPECIFICATIONS. WATER MAINS 20-INCH AND LARGER SHALL BE CLASS 51. ANY VARIATION OF THIS STANDARD SHALL BE NOTED ON THE PLANS. ALL D.I. PIPE FITTINGS SHALL BE POLYETHYLENE WRAPPED.

3. ALL BENDS, PLUGS, REDUCERS, AND FIRE HYDRANTS ARE TO BE RODDED. ALL FITTINGS SHALL BE WRAPPED WITH 8-MIL MINIMUM THICKNESS POLYETHYLENE MATERIAL PER AWWA STANDARD C-105.

4. ALL WATER VALVES SHALL BE OPEN RIGHT.

5. THERE SHALL BE A MINIMUM COVER OF 4-1/2-FEET OVER ALL WATER MAINS.

6. FIRE HYDRANTS SHALL CONFORM TO AWWA C-502 "DRY BARREL FIRE HYDRANTS" PIPE. HYDRANT ASSEMBLIES SHALL INCLUDE ALL PIPE, FITTINGS, VALVES, MATERIALS, AND LABOR NECESSARY TO INSTALL THE HYDRANT COMPLETE IN PLACE. ACCEPTABLE MODELS ARE MUELLER CENTURION MODEL 423 OR WATEROUS COMPANY PACER WB-67 MODEL WITH BRONZE BUSED SHOW AND BRONZE SHAFT COUPLING, THE 4-1/2-INCH NOZZLE TO HAVE N.S.T. THREADS.

7. ALL BENDS, TEES, FIRE HYDRANTS, BLOW-OFFS AND PLUGS AT DEAD-END MAINS SHALL BE PROTECTED FROM THRUST BY USING CONCRETE THRUST BLOCKS.

8. CHLORINATION AND FLUSHING: ALL WATER MAINS SHALL BE INSTALLED AND CHLORINATED PER STONEGATE VILLAGE METROPOLITAN DISTRICT STANDARDS AND SPECIFICATIONS. THE LINES SHALL BE CHLORINATED IN ACCORDANCE WITH AWWA C-601, "DISINFECTING WATER MAINS." THE PREFERRED METHOD IS TO USE SUFFICIENT CHLORINE TABLETS TO PRODUCE A 50-MG TO 1 SOLUTION. THESE TABLETS SHOULD BE ADHERED TO THE TOP OF THE PIPE SECTION WITH PERMATEX NO.1 (RED). THE CHLORINATION OF ANY FINISHED PIPELINE SHALL BE DONE PRIOR TO THE HYDROSTATIC TESTING. STERILIZATION AND FLUSHING OF ALL MAINS SHALL BE INSPECTED COPY OF THE CERTIFIED BY HEALTH DEPARTMENT HAVING JURISDICTION. ONE COPY OF THE CERTIFICATION SHALL STATE THE LOCATION OF THE MAIN, THAT THE MAIN HAS BEEN INSPECTED BY A REPRESENTATION OF THE HEALTH DEPARTMENT HAVING JURISDICTION, AND WAS FOUND TO COMPLY WITH THE PROCEDURES SET FORTH BY THAT DEPARTMENT.

8. HYDROSTATIC TESTING: ALL WATER MAINS SHALL BE TESTED PER THE REQUIREMENTS OF THE STONEGATE VILLAGE METROPOLITAN DISTRICT STANDARDS AND SPECIFICATIONS. ALL PIPE SHALL BE FIELD PRESSURE-TESTED TO A MINIMUM OF 150 PSI. ALL TESTING SHALL BE DONE IN THE PRESENCE OF A STONEGATE VILLAGE METROPOLITAN DISTRICT INSPECTOR. LEAKAGE FOR EACH SECTION OF PIPE BETWEEN LINES VALVES SHALL NOT EXCEED THE LIMITS SET FORTH IN THE STONEGATE VILLAGE METROPOLITAN DISTRICT STANDARDS AND SPECIFICATIONS.

9. VALVES IN STREETS ARE TO BE LOCATED AT PROPERTY LINE EXTENSIONS EXCEPT FOR TAPPING TEES, WHERE AN ADDITIONAL VALVE SHALL BE PLACED ON THE TAPPING TEE. OTHER VALVE LOCATIONS, SUCH AS WHERE CROSS-PANS EXIST, ARE SHOWN ON THE PLANS.

10. WHEN NECESSARY TO LOWER OR RAISE WATER LINES AT STORM DRAINS AND OTHER UTILITY CROSSINGS, A MINIMUM CLEARANCE OF 1-1/2-FEET SHALL BE MAINTAINED BETWEEN OUTSIDE OF PIPES.

11. THE CONTRACTOR SHALL HAVE IN HIS/HER POSSESSION AT ALL TIMES ONE SIGNED COPY OF THE PLANS WHICH HAVE BEEN APPROVED BY THE STONEGATE VILLAGE METROPOLITAN DISTRICT AND THE DISTRICT ENGINEER.

12. THE CONTRACTOR SHALL NOTIFY THE STONEGATE VILLAGE METROPOLITAN DISTRICT AND THE DISTRICT ENGINEER AT LEAST 48-HOURS PRIOR TO ANY CONSTRUCTION. IF WORK IS SUSPENDED FOR ANY PERIOD OF TIME AFTER INITIAL START-UP, THE CONTRACTOR MUST NOTIFY THE DISTRICT ENGINEER 48-HOURS PRIOR TO RE-START.

13. PIPE BEDDING SHALL BE A CLEAN, WELL-GRADED SAND OR SQUEEGEE SAND IN ACCORDANCE WITH STONEGATE VILLAGE METROPOLITAN DISTRICT STANDARDS AND SPECIFICATIONS, LATEST REVISION.

14. THE CONTRACTOR SHALL NOTIFY THE PUBLIC UTILITY COMPANIES AND DETERMINE THE LOCATION OF ALL EXISTING UNDERGROUND UTILITIES PRIOR TO PROCEEDING WITH THE EXCAVATION. ALL WORK PERFORMED IN THE AREA OF THE PUBLIC UTILITIES SHALL BE PERFORMED ACCORDING TO THE REQUIREMENTS OF THESE AGENCIES.

15. COMPACTION OF ALL TRENCHES MUST BE ATTAINED IN ACCORDANCE WITH THE SOILS REPORTS AND COMPACTION TEST RESULTS SUBMITTED TO THE DISTRICT ENGINEER PRIOR TO PROBATIONARY ACCEPTANCE.

16. VALVE BOXES: TYLER SCREW-TYPE 6-INCH CAST-IRON VALVE BOX ASSEMBLY SERIES 6860 WITH NO. 1560 OVAL BASE. CLAY AND BAILEY SCREW-TYPE 6 INCH CAST-IRON VALVE BOX ASSEMBLY NO. P-108 WITH NO. 106 LARGE OVAL BASE.

17. ALL PIPE LENGTHS ARE APPROXIMATE.

18. AT LEAST 5-DAYS PRIOR TO THE START OF CONSTRUCTION, A PRE-CONSTRUCTION MEETING WILL BE HELD AT THE OFFICE OF THE DISTRICT ENGINEER AND ATTENDED BY THE CONTRACTOR AND REPRESENTATIVE OF OTHER APPROVING AGENCIES. IT WILL BE THE RESPONSIBILITY OF THE CONTRACTOR TO CONTACT THE DISTRICT ENGINEER.

SANITARY SEWER NOTES

1. ALL SANITARY SEWER CONSTRUCTION SHALL CONFORM TO THE STONEGATE VILLAGE METROPOLITAN DISTRICT STANDARDS AND SPECIFICATIONS.

2. ALL SEWER MAINS SHALL BE PVC, ASTM D-3034, SDR 35 OR APPROVED EQUAL. ALL SEWER MAIN SIZE IS 8-INCH IN DIAMETER UNLESS OTHERWISE NOTED.

3. SEWER LINES SHALL BE INSTALLED 5-FEET SOUTH OR WEST OF STREET CENTERLINE, UNLESS OTHERWISE SHOWN ON PLANS. SEWER LINES SHALL BE 10-FEET FROM WATER LINES EXCEPT WHEN CROSSING EACH OTHER. SEWER LINES WHICH CROSS LESS THAN 1-1/2-FEET VERTICALLY FROM THE WATER MAIN SHALL BE ENCASED IN CONCRETE AS PER STONEGATE VILLAGE METROPOLITAN DISTRICT STANDARDS AND SPECIFICATIONS. USE RUBBER GASKETS FOR PVC ENCASEMENT.

4. SEWER RIM ELEVATIONS SHOWN ARE APPROPRIATE ONLY AND ARE NOT TO BE TAKEN AS FINAL ELEVATIONS. RING AND COVER SHALL BE SET IN CENTERED CONCRETE RINGS WITH RAM-NECK FOR ADJUSTMENT TO MATCH FINAL PAVEMENT ELEVATIONS.

5. THE CONTRACTOR AND SURVEY CREW SHALL VERIFY ELEVATIONS OF EXISTING SEWER LINES AND MANHOLES TO BE TIED TO PRIOR TO CONSTRUCTION OR STAKING OF SANITARY SEWER.

6. SEWER WYES SHALL BE USED RATHER THAN TEES. SEWER SERVICE WYES FOR EACH UNIT SHALL BE STAKED BY A SURVEY CREW, AND FURNISHED AND INSTALLED BY THE CONTRACTOR. THE CONTRACTOR SHALL FURNISH TO THE ENGINEER "AS BUILT" LOCATION OF WYES.

7. ALL MANHOLES SHALL BE 48-INCHES IN DIAMETER WITH 24-INCH RING AND COVER, ECCENTRIC CONE, UNLESS OTHERWISE SPECIFIED.

8. PIPE BEDDING SHALL BE CLASS "B" AND SHALL CONFORM TO ASTM C-33 OR D-448 GRADATION NO. 6 OR NO. 67.

9. AT LEAST 5-DAYS PRIOR TO THE START OF CONSTRUCTION, A PRE-CONSTRUCTION MEETING WILL BE HELD AT THE OFFICE OF THE DISTRICT ENGINEER AND ATTENDED BY THE CONTRACTOR AND REPRESENTATIVES OF THE OTHER APPROVING AGENCIES. IT WILL BE THE RESPONSIBILITY OF THE CONTRACTOR TO CONTACT THE DISTRICT ENGINEER TO SCHEDULE THIS MEETING.

10. ALL PIPE LENGTHS ARE APPROXIMATE.

11. THE CONTRACTOR SHALL HAVE IN HIS/HER POSSESSION AT ALL TIMES ONE SIGNED COPY OF THE PLANS WHICH HAVE BEEN APPROVED BY THE STONEGATE VILLAGE METROPOLITAN DISTRICT AND THE DISTRICT ENGINEER.

12. ALL MANHOLES SHALL HAVE SHAPED INVERTS.

13. ALL SEWER LINES SHALL BE TESTED IN ACCORDANCE WITH THE STONEGATE VILLAGE METROPOLITAN DISTRICT STANDARDS AND SPECIFICATIONS PRIOR TO ACCEPTANCE OR ANY CONNECTION TO AN EXISTING SEWER LINE.

14. PRIOR TO START WORK WHERE SEWER MAIN IS TO BE INSTALLED INTO EXISTING DISTRICT SEWER SYSTEMS, THE NEAREST MANHOLE TO THE POINT OF TIE-IN SHALL BE PLUGGED WITH A PLUMBER'S PLUG ON THE INLET SIDE BY THE CONTRACTOR. THIS PLUG SHALL REMAIN IN PLACE UNTIL FINAL ACCEPTANCE BY THE DISTRICT. ITS PURPOSE SHALL BE TO PREVENT ANY MUD, WATER OR OTHER MATERIALS FROM ENTERING THE LINE DURING CONSTRUCTION. THE CONTRACTOR SHALL BE RESPONSIBLE FOR PUMPING AND CLEANING THESE MANHOLES AND REMOVING THE PLUG WHEN SO INSTRUCTED BY THE DISTRICT.

15. PRIOR TO PROBATIONARY ACCEPTANCE WALK-THROUGH, THE CONTRACTOR/DEVELOPER SHALL JET CLEAN THE ENTIRE SANITARY SEWER SYSTEM AND PUMPOUT AT THE PLUGGED MANHOLE.

16. ALL SERVICES WILL BE PERMANENTLY MARKED ON CURB FACE AS FOLLOWS:

    "X" FOR SANITARY SEWER SERVICES

    "V" FOR WATER SERVICES

17. ALL WAREHOUSE BUILDING COMPANIES WITH AN SIC CODE SHALL FILL OUT AN INDUSTRIAL WASTE AND SILVER MERCURY WASTE DISCHARGE QUESTIONNAIRE PRIOR TO DISTRICT APPROVAL.

DISTRICT ACCEPTANCE NOTE:

1. UPON COMPLETION OF SANITARY SEWER AND WATER CONSTRUCTION AND TESTING, THE DEVELOPER OR CONTRACTOR SHALL CONTACT THE DISTRICT FOR PROBATIONARY ACCEPTANCE INSPECTION. A PUNCHLIST WILL BE PROVIDED THE DEVELOPER AND CONTRACTOR UPON COMPLETION OF THE INITIAL WALK-THROUGH AND PROBATIONARY ACCEPTANCE WILL BE ISSUED FOLLOWING COMPLETION AND ACCEPTANCE OF THE WORK OUTLINED IN THE PUNCHLIST.

2. THE CONTRACTOR WILL BE HELD RESPONSIBLE FOR THE PROPER FUNCTIONING OF THE LINES FOR UP TO 1-YEAR FROM THE DATE OF PROBATIONARY ACCEPTANCE OF THE LINES BY THE DISTRICT. ANY MALFUNCTION DURING THIS PERIOD OF GUARANTEE SHALL BE REMEDIED BY THE CONTRACTOR TO THE SATISFACTION OF THE DISTRICT ENGINEER AT NO EXPENSE TO THE DISTRICT.

3. THE DATE OF FINAL ACCEPTANCE WILL BE INDICATED IN THE CONDITIONS OF THE PROBATIONARY ACCEPTANCE LETTER. THE DEVELOPER SHALL BE RESPONSIBLE FOR CONTACTING THE DISTRICT FOR FINAL INSPECTION AND FINAL ACCEPTANCE.

MASTER LEGEND

	PROPOSED SANITARY SEWER W/MANHOLE
	PROPOSED WATERLINE W/ GATE VALVE
	PROPOSED F.H. ASSEMBLY, GATE VALVE & TEE
S	EXISTING SANITARY SEWER W/ MANHOLE
WM	EXISTING WATERLINE W/ GATE VALVE
	EXISTING FH ASSEMBLY, GATE VALVE & TEE
XG	EXISTING HIGH PRESSURE GAS LINE
	PROPOSED STORM SEWER W/ MANHOLE
	PROPOSED EOA, FL AND BOC
	PROPOSED SIDEWALK
	PROPOSED ROW
	PROPOSED UTILITY EASEMENT
	EXISTING TOP BACK OF CURB
	EXISTING FLOWLINE
	EXISTING LIP OF CURB/EDGE OF ASPHALT
	EXISTING STORM INLET
	PROPOSED STORM INLET
W	PROPOSED WATER SERVICE W/ CURBSTOP
S	PROPOSED SANITARY SERVICE
W	EXISTING WATER SERVICE W/ CURBSTOP
S	EXISTING SANITARY SERVICE
	CAUTION! UTILITY CROSSING
	PROPOSED CROSS PAN
	EXISTING CROSS PAN
5750	PROPOSED CONTOURS
5750	EXISTING CONTOURS
T	EXISTING TELEPHONE LINE
E	EXISTING ELECTRIC LINE
	EXISTING STORM
OH	EXIST. OVERHEAD UTILITY
	EXISTING POWER POLES
HP	HIGH POINT
LP	LOW POINT
TW	TOP OF WALL ELEVATION
M.E.	MATCH EXISTING
26.3 PROPERTY LINE FL R/W	INDICATES PROPERTY CORNER ELEV. PER GRADING TEMPLATES
	CUT/FILL LINE
	FLOW DIRECTION ARROW
	PROPOSED ASPHALT LIMITS
	PROPOSED SIGN
	PROPOSED STREET LIGHT

DATE	REVISIONS	DRAWN BY

Manhard CONSULTING LTD
7600 East Orchard Road, Suite 150-N, Greenwood Village, CO 80111 | ph: 303.708.0500 | manhard.com
Civil Engineers | Surveyors | Water Resource Management | Construction Management

COMPARK VILLAGE SOUTH, FILING NO 1
TOWN OF PARKER, COLORADO
GENERAL NOTES

COLORADO REGISTERED PROFESSIONAL ENGINEER
RICKY J. MOORE
30877

PROJ. MGR:	RJM
PROJ. ASSOC:	GTI
DRAWN BY:	STAFF
DATE:	7/2019

SHEET 2 OF 9

© 2018 MANHARD CONSULTING, LTD. ALL RIGHTS RESERVED

PENDING APPROVAL - NOT FOR CONSTRUCTION

Plotted: 9/27/2019 9:29 AM Dwg Name: P:\Cpkc3\ComSouth04-Master San & Water\dwg\Eng\Final Drawing\Plan Set\Offsite\CLCPKC3 Waterline Bore\Construction Plans\GENERAL NOTES.dwg Updated By: SGroth

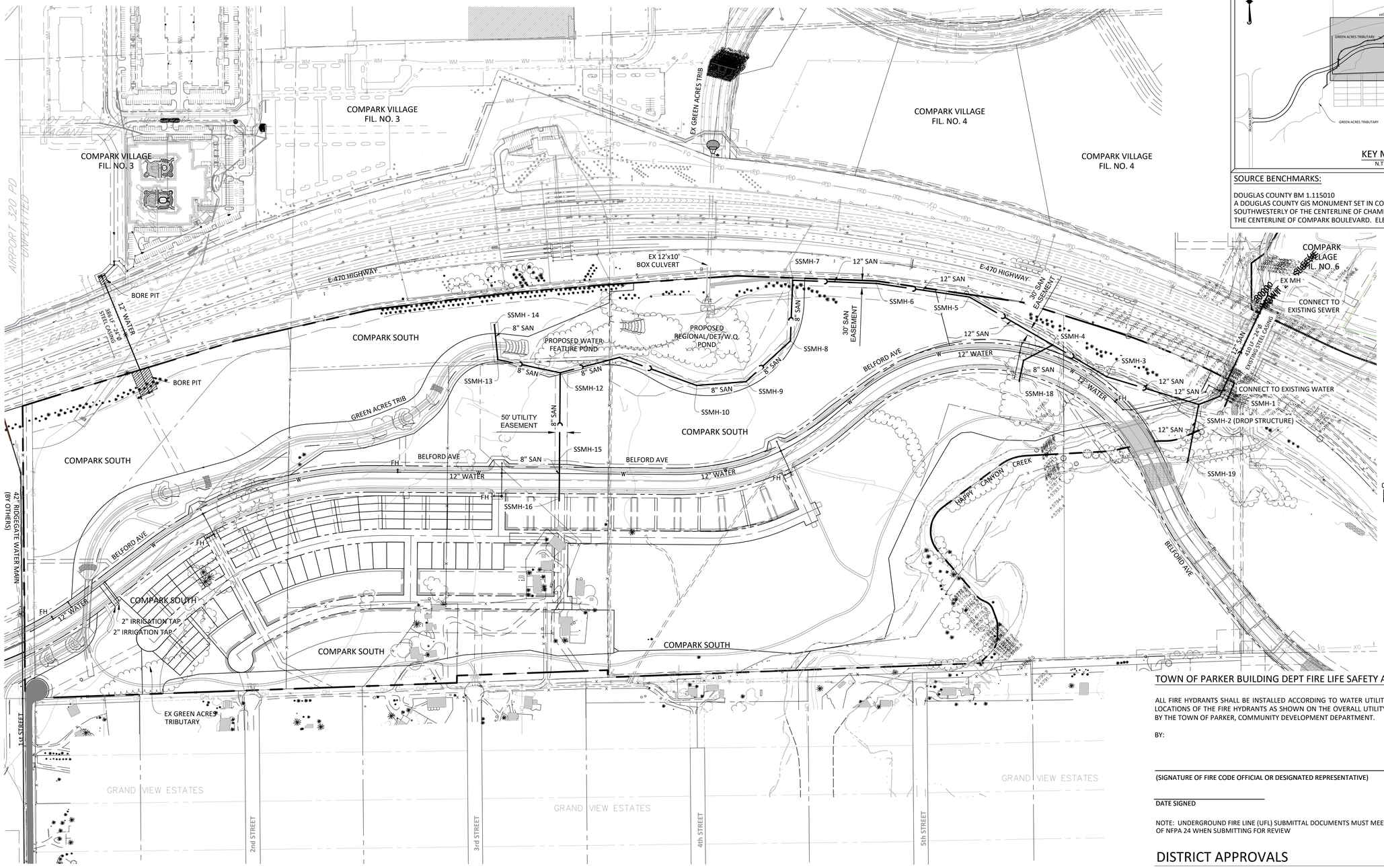

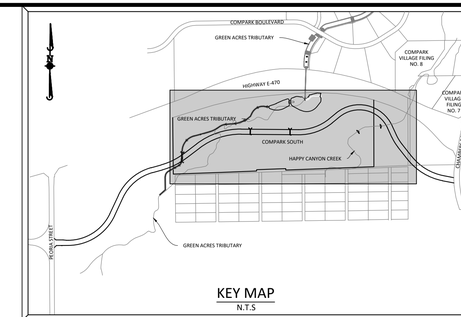

KEY MAP
N.T.S

SOURCE BENCHMARKS:

DOUGLAS COUNTY BM 1.115010
A DOUGLAS COUNTY GIS MONUMENT SET IN CONCRETE LOCATED APPROXIMATELY 130 FEET SOUTHWESTERLY OF THE CENTERLINE OF CHAMBERS ROAD AND 95 FEET NORTHWESTERLY OF THE CENTERLINE OF COMPARK BOULEVARD. ELEVATION = 5752.84 (NAVD 88)

Know what's below. Call before you dig.

TOWN OF PARKER BUILDING DEPT FIRE LIFE SAFETY APPROVAL

ALL FIRE HYDRANTS SHALL BE INSTALLED ACCORDING TO WATER UTILITY STANDARDS. THE NUMBER AND LOCATIONS OF THE FIRE HYDRANTS AS SHOWN ON THE OVERALL UTILITY PLAN ARE CORRECT AS SPECIFIED BY THE TOWN OF PARKER, COMMUNITY DEVELOPMENT DEPARTMENT.

BY:

(SIGNATURE OF FIRE CODE OFFICIAL OR DESIGNATED REPRESENTATIVE)

DATE SIGNED

NOTE: UNDERGROUND FIRE LINE (UFL) SUBMITTAL DOCUMENTS MUST MEET THE REQUIREMENTS OF NFPA 24 WHEN SUBMITTING FOR REVIEW

DISTRICT APPROVALS

THESE DESIGNS, PLANS, AND CONTRACT DOCUMENTS ARE REVIEWED FOR CONCEPT AND GENERAL CONFORMANCE TO THE DISTRICT'S MINIMUM STANDARDS ONLY, AND THE PRIMARY RESPONSIBILITY FOR DESIGN ADEQUACY IS TO REMAIN WITH THE ENGINEER OF RECORD. THIS REVIEW DOES NOT IMPLY RESPONSIBILITY BY EITHER THE STONEGATE VILLAGE METROPOLITAN DISTRICT OR THE DISTRICT ENGINEER FOR COMPLETENESS, ACCURACY OR CORRECTNESS OF CALCULATIONS. THE REVIEW DOES NOT IMPLY THAT QUANTITIES OF ITEMS INDICATED ON THE PLANS ARE THE FINAL QUANTITIES REQUIRED. THE REVIEW SHALL NOT BE CONSTRUED FOR ANY REASON AS ACCEPTANCE OF FINANCIAL RESPONSIBILITY BY THE STONEGATE VILLAGE METROPOLITAN DISTRICT FOR ADDITIONAL ITEMS AND ADDITIONAL QUANTITIES OF ITEMS SHOWN THAT MAY BE REQUIRED DURING THE CONSTRUCTION PHASE.

APPROVED FOR CONSTRUCTION WITHIN ONE YEAR OF THE EARLIEST OF THESE DATES:

BY _____ _____
STONEGATE VILLAGE METROPOLITAN DISTRICT ENGINEER DATE

BY _____ _____
STONEGATE VILLAGE METROPOLITAN DISTRICT MANAGER DATE

DATE	REVISIONS	DRAWN BY

Manhard CONSULTING LTD
7600 East Orchard Road, Suite 150-N, Greenwood Village, CO 80111 ph:303.708.0500 manhard.com
Civil Engineers | Surveyors | Water Resource Management | Construction Management

COMPARK VILLAGE SOUTH, FILING NO 1
TOWN OF PARKER, COLORADO
OVERALL UTILITY PLAN

PROJ. MGR.: RJM
PROJ. ASSOC.: GTI
DRAWN BY:
DATE: 7/2019

SHEET 3 OF 9

© 2018 MANHARD CONSULTING, LTD. ALL RIGHTS RESERVED

PENDING APPROVAL - NOT FOR CONSTRUCTION

Plotted: 10/1/2019 8:23 AM Dwg Name: P:\Ctcpkc3\ComSouth04-Master-San & Water\dwg\Eng\Final Drawings\Plan Set\Offsite\CLCPKC3 Waterline Bore\Construction Plans\Overall Water.dwg Updated By: Skosbab

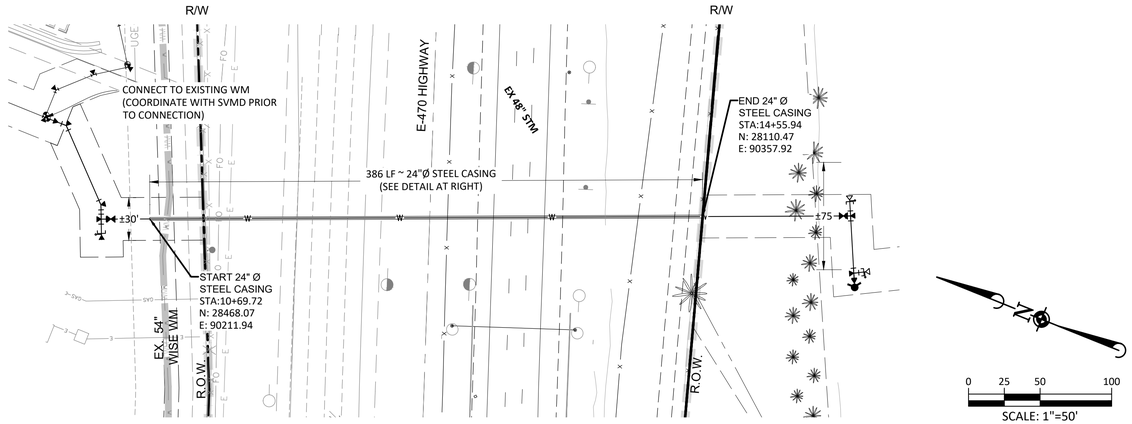

E-470 BORE CROSSING

SCALE 1"=50'

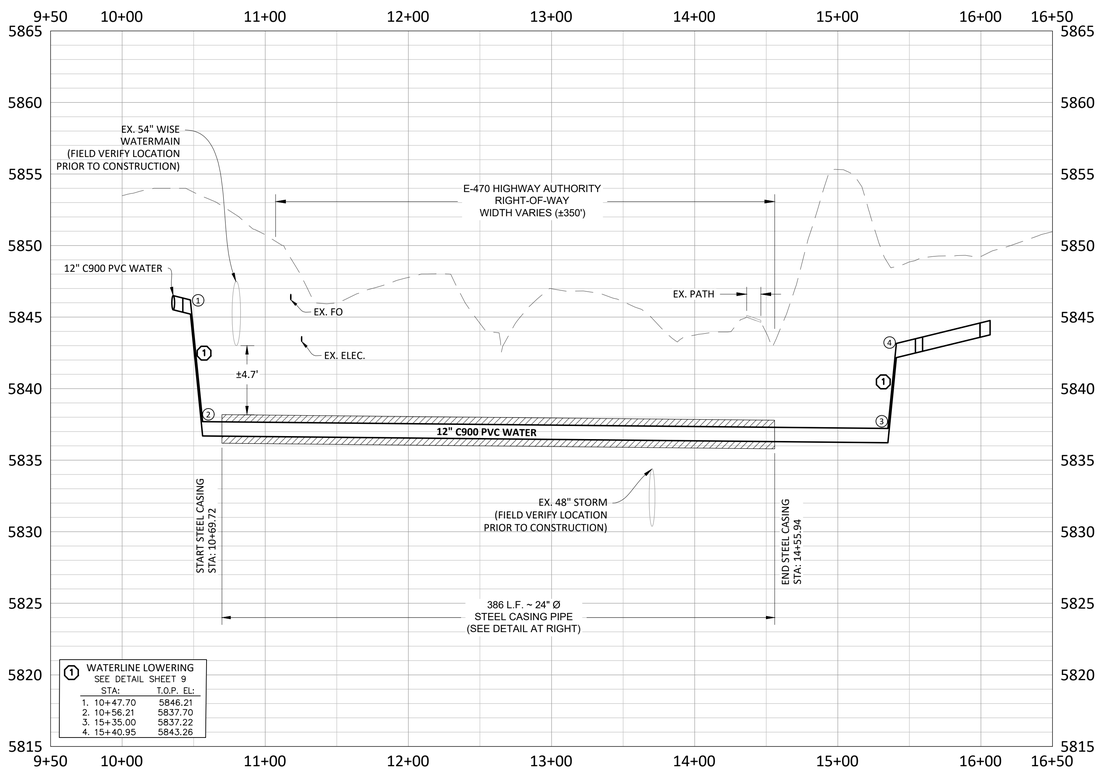

PROFILE: BORE CROSSING

SCALE 1"=50'

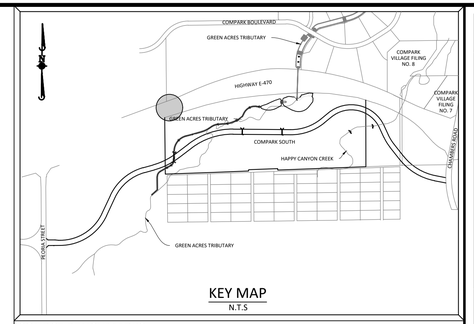

KEY MAP

N.T.S

SOURCE BENCHMARKS:

DOUGLAS COUNTY BM 1.115010
A DOUGLAS COUNTY GIS MONUMENT SET IN CONCRETE LOCATED APPROXIMATELY 130 FEET SOUTHWESTERLY OF THE CENTERLINE OF CHAMBERS ROAD AND 95 FEET NORTHWESTERLY OF THE CENTERLINE OF COMPARK BOULEVARD. ELEVATION = 5752.84 (NAVD 88)

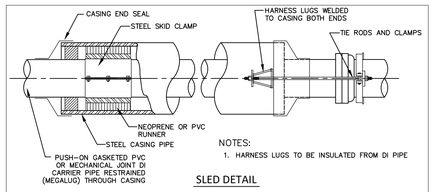

NOTES:
1. HARNESS LUGS TO BE INSULATED FROM DI PIPE

SLED DETAIL

(SEE TABLE BELOW FOR SIZE AND WALL THICKNESS)

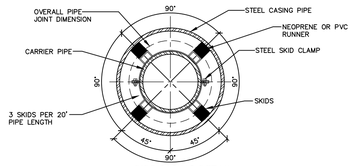

PIPE CASING DETAIL

CARRIER PIPE NOMINAL Ø	CASING PIPE MIN OD	CASING PIPE MIN WALL THICKNESS
4"	12"	0.188"
6"	16"	0.25"
8"	18"	0.282"
12"	22"	0.344"
16"	28"	0.406"
20"	32"	0.469"

NOTE:
TRENCH LAID CASINGS SHALL BE DESIGNED AND INSTALLED TO CONDUIT STANDARDS.

DATE 03/09	COTTONWOOD WATER AND SANITATION DISTRICT	RESTRAINED CASING SPACERS DETAIL
REVISION 2/08		
DRAWING NO. CTWD–	Kennedy/Jenks Consultants	

CONTRACTOR TO COORDINATE BORINGS WITH JURISDICITIONS PRIOR TO CONSTRUCTION.

CONTRACTOR TO FIELD VERIFY LOCATION/ELEVATION OF ALL EXISTING UTILITIES PRIOR TO CONSTRUCTION. NOTIFY DESIGN ENGINEER OF ANY DISCREPENCIES.

811 Know what's below. Call before you dig.

DRAWN BY
REVISIONS
DATE

Manhard CONSULTING LTD
7600 East Orchard Road, Suite 150-N, Greenwood Village, CO 80111 ph: 303.708.0500 manhard.com
Civil Engineers | Surveyors | Water Resource Engineers
Water Resource Management | Construction Management

COMPARK VILLAGE SOUTH, FILING NO 1
TOWN OF PARKER, COLORADO
WATER MAIN BORE - STEEL CASING

PROJ. MGR.: RJM
PROJ. ASSOC.: GTI
DRAWN BY:
DATE: 7/2019

SHEET 4 OF 9

PENDING APPROVAL - NOT FOR CONSTRUCTION

© 2018 MANHARD CONSULTING, LTD. ALL RIGHTS RESERVED

Plotted: 10/24/2019 9:54 AM Dwg Name: P:\Cpk3\Com South04-Master San & Water\dwg\Eng\Final Drawings\Plan Set\Offsite\CLCPK03 Waterline Bore\Construction Plans\Water Bore.dwg Updated By: $kosbab

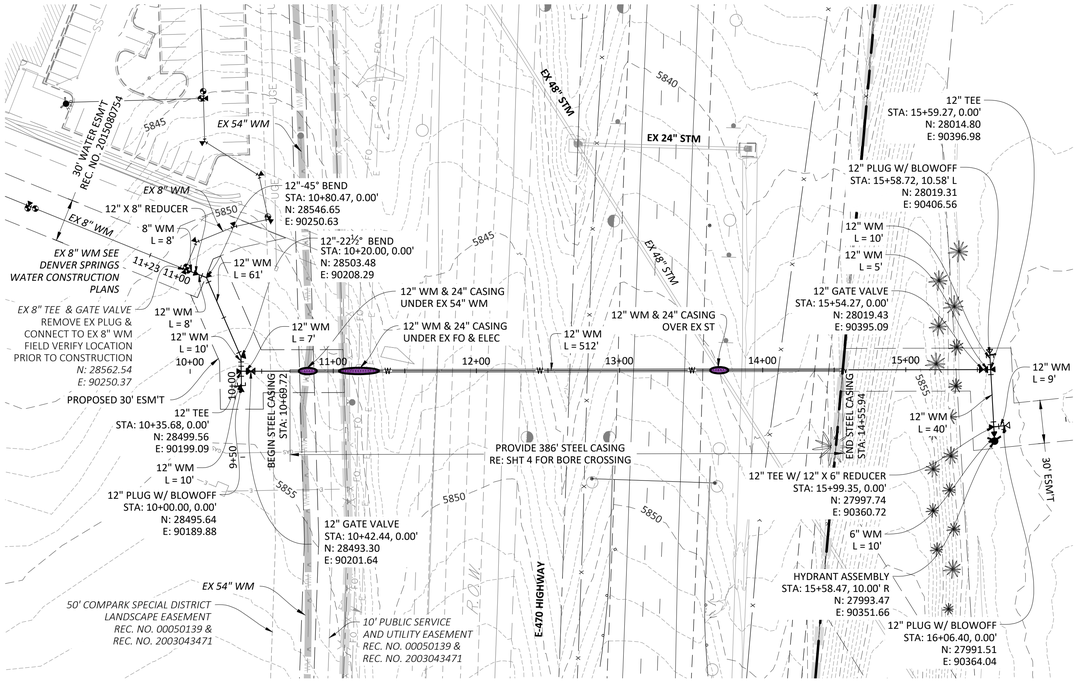

PLAN: 12" WATERLINE

0 25 50 100

SCALE: 1"=50'
VERTICAL SCALE: 1"=5'

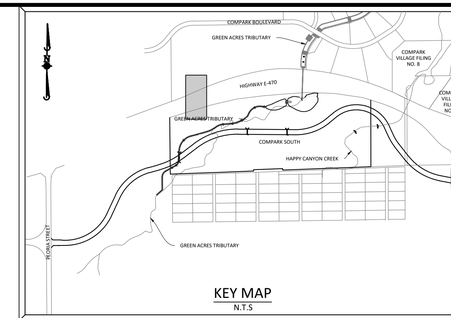

KEY MAP
N.T.S

SOURCE BENCHMARKS:

DOUGLAS COUNTY BM 1.115010
A DOUGLAS COUNTY GIS MONUMENT SET IN CONCRETE LOCATED APPROXIMATELY 130 FEET SOUTHWESTERLY OF THE CENTERLINE OF CHAMBERS ROAD AND 95 FEET NORTHWESTERLY OF THE CENTERLINE OF COMPARK BOULEVARD. ELEVATION = 5752.84 (NAVD 88)

CONTRACTOR TO FIELD VERIFY LOCATIONS/ELEVATIONS OF EXISTING UTILITIES PRIOR TO CONSTRUCTION. NOTIFY DESIGN ENGINEER OF ANY DISCREPANCIES

WATER MAIN SHALL BE CONSTRUCTED USING MANUFACTURER SPECIFICATION AND/OR A MAXIMUM OF 1° DEFLECTION AT THE JOINT, WHICHEVER IS MORE STRICT, AND HIGH DEFLECTION COUPLING WITH A MAXIMUM DEFLECTION OF 3°.

1° DEFLECTION = 1,150' RADIUS 3° DEFLECTION = 385' RADIUS
(ASSUMING 20' SECTION OF PIPE)

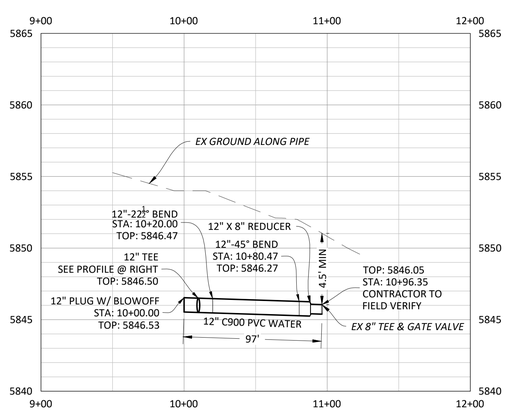

PROFILE: 8" WATERLINE

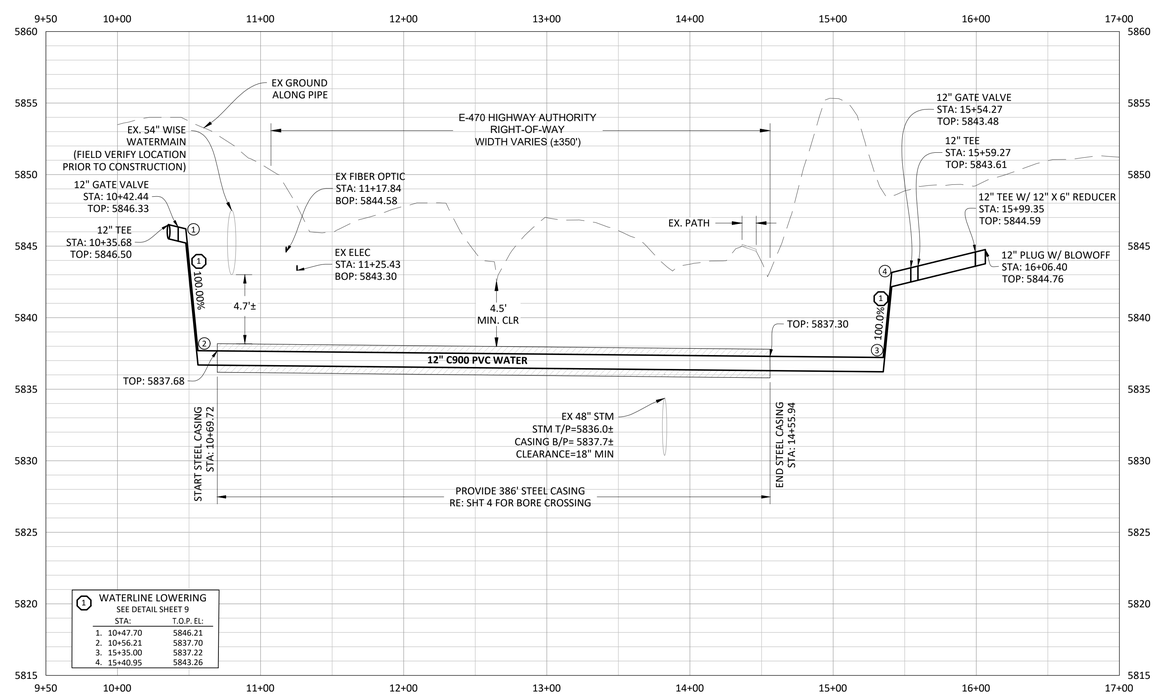

PROFILE: 12" WATERLINE

811
Know what's below.
Call before you dig.

DRAWN BY
REVISIONS
DATE

Manhard CONSULTING LTD
7600 East Orchard Road, Suite 150-N, Greenwood Village, CO 80111 ph: 303.708.0500 manhard.com
Civil Engineers | Surveyors | Water Resource Engineers | Planners | Landscape Architects
Water Resource Management | Construction Management

COMPARK VILLAGE SOUTH, FILING NO 1
TOWN OF PARKER, COLORADO
WATER MAIN BORE - WATER MAIN

PROJ. MGR.: RJM
PROJ. ASSOC.: GTI
DRAWN BY:
DATE: 7/2019

SHEET
5 OF 9

© 2018 MANHARD CONSULTING, LTD. ALL RIGHTS RESERVED

PENDING APPROVAL - NOT FOR CONSTRUCTION

Plotted: 10/24/2019 9:53 AM Dwg Name: P:\Cpk3\ComSouth04-Master San & Water\dwg\Eng\Final Drawings\Plan Set\Offsite\CLCPK3 Waterline Bore\Construction Plans\Water Bore2.dwg Updated By: SKoutsb

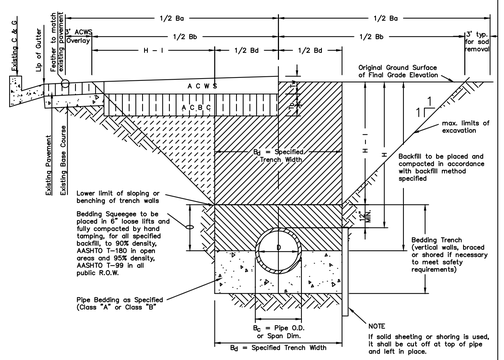

TYPICAL TRENCH DETAIL

T_b = Thickness of Asphaltic Concrete Base Course (A C B C)

T_w = Thickness of Asphaltic Concrete Wearing Surface (A C W S)

T_o = Total Asphalt Thickness (T_b + T_w)

B_C = Outside Pipe or Conduit Span Dimension

B_d = Specified Bedding Trench Width and Max Bedding Trench Width at a point 12" above Top of Pipe (See Note 2)

B_b = Max. Pay Width of Asphaltic Concrete Base Course (or Asphaltic Concrete Cold Mix) (See Note 3 & Table 1)

B_a = Max. Pay Width of Asphaltic Concrete Wearing Surface or Sod Replacement (See Note 3 and Table 1)

H = Depth of Surface to Top of Pipe

H–I= Depth from Surface to 1 ft. above Top of Pipe

ASPHALT AND BASE COURSE REPLACEMENT SCHEDULE

STREET WIDTH	ASPHALTIC BASE COURSE (T_b)	ASPHALTIC WEARING SURFACE (T_w)	TOTAL THICKNESS (T_o)
UP TO 36'	4"	2"	6"
36' TO 44'	4"	3"	7"
44' TO 48'	5"	3"	8"
WIDER THAN 48'	6"	3"	9"

TABLE II * Uless otherwise noted on the plans or in the specs.

NOTES

1. *Sloping or benching of trench side walls, where permitted shall be in accordance with applicable Federal, State and Local safety regulations.*
2. *Trench shall be braced and shored as necessary to afford safe working conditions or to protect adjacent utilities, structures, etc.. Unless otherwise specified on the plans, no pavement will be made for removal, replacement or relocation of curb and gutter, utilities, sidewalk, structures, etc. outside the maximum limits of excavation as shown and the contractor shall be responsible for protection of same.*
3. *If dimension "Ba" is < 5', then existing asphalt pavement shall be removed and replaced up to the gutter. Maximum asphalt pay widths, Bb & Ba shall then be based upon this actual width.*

STONEGATE VILLAGE
METROPOLITAN DICTRICT

SEWER TRENCHING AND BEDDING DETAIL

SCALE: NONE | DATE: 4/00

APPROVED: RJG
DISTRICT ENGINEER

2000 REVISION

SHEET 1

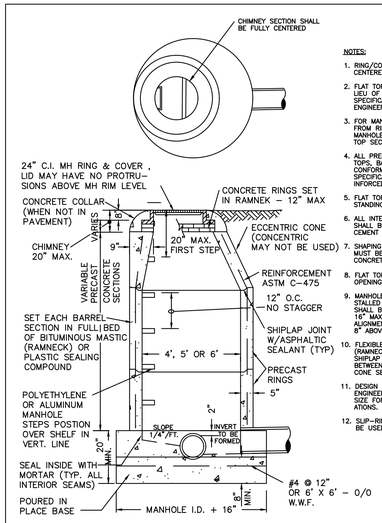

NOTES:

1. RING/COVER AND CHIMNEY SHALL BE CENTERED ON CONCRETE RINGS W/RAMNECK.
2. FLAT TOP SECTIONS MAY BE USED IN LIEU OF ECCENTRIC MANHOLES WHEN SPECIFICALLY APPROVED BY DISTRICT ENGINEER.
3. FOR MANHOLE DEPTHS LESS THAN 4' FROM RIM TO TOP OF BENCH, VERTICAL MANHOLE BARRELS WITH PRECAST FLAT TOP SECTIONS ARE REQUIRED.
4. ALL PRECAST MANHOLE SECTIONS, FLAT TOPS, BARRELS, REDUCERS, ETC. SHALL CONFORM TO ASTM C-478, STANDARD SPECIFICATIONS FOR PRECAST REINFORCED MANHOLE SECTIONS.
5. FLAT TOPS SHALL BE CAPABLE OF WITHSTANDING H-20 LIVE LOADS.
6. ALL INTERIOR SEAMS AND PIN HOLES SHALL BE GROUTED WITH TYPE II CEMENT MIX.
7. SHAPING FOR SMOOTH MANHOLE INVERTS MUST BE DONE BY FORMING OR SHAPING CONCRETE BASE.
8. FLAT TOP SECTIONS WITH CONCENTRIC OPENINGS ARE NOT ALLOWED.
9. MANHOLE STEPS SHALL NOT BE INSTALLED OVER THE FLOW CHANNEL. THEY SHALL BE PLACED 12" MINIMUM OR 16" MAXIMUM IN STRAIGHT VERTICAL ALIGNMENT WITH THE BOTTOM STEP 8" ABOVE THE BENCH MINIMUM.
10. FLEXIBLE ASPHALTIC SEALANT, (RAMNECK ETC.) IS REQUIRED IN SHIPLAP JOINTS AND IN JOINTS BETWEEN BASE, BARREL SECTIONS, CONE SECTIONS, FLAT TOPS, ETC.
11. DESIGN ENGINEER OR DISTRICT ENGINEER MAY INCREASE MANHOLE SIZE FOR SPECIAL DESIGN CONSIDERATIONS.
12. SLIP-RING FRAME RISERS MAY NOT BE USED.

PIPE I.D.	MANHOLE I.D.
18" & SMALLER	4'–0"
21" TO 48"	5'–0"
54"	6'–0"
60" & LARGER	SPECIAL DESIGN

STONEGATE VILLAGE
METROPOLITAN DICTRICT

PRECAST MANHOLE ECCENTRIC CONE

SCALE: NONE | DATE: 4/00

APPROVED: RJG
DISTRICT ENGINEER

SHEET 9

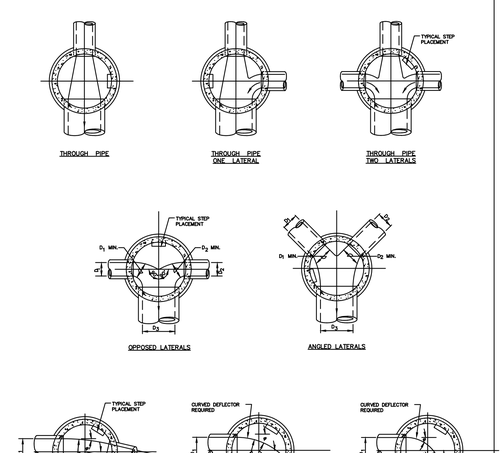

STONEGATE VILLAGE
METROPOLITAN DICTRICT

TYPICAL BASE CHANNELIZATION DETAILS

SCALE: NONE | DATE: 4/00

APPROVED: RJG
DISTRICT ENGINEER

SHEET 15

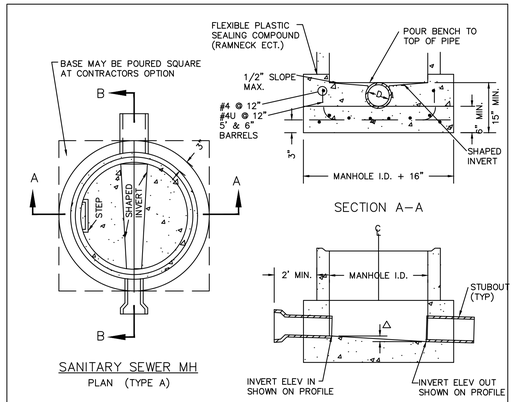

NOTES:

1. Manhole barrel min. thickness to be 5".
2. Shaping for smooth manhole inverts may be done by forming or shaping with cement mortar (San. Sewer).
3. The manhole steps shall conform to District Standards and Specifications.
4. Precast sections to conform to A.S.T.M C-478.
5. All dead-end manholes shall be stubbed thru at 0.40% minimum slope.
6. Stub outs shall extend 2'-0" minimum past manhole O.D. and be satisfactorily plugged.
7. Reinforcing in base required for manhole.
8. Maximum slope of bench = 1/2".
9. △ = invert drop thru MH (if △ > 18", outside drop MH required).

STONEGATE VILLAGE
METROPOLITAN DICTRICT

CAST-IN-PLACE MANHOLE BASE DETAIL

SCALE: NONE | DATE: 4/00

APPROVED: RJG
DISTRICT ENGINEER

SHEET 13

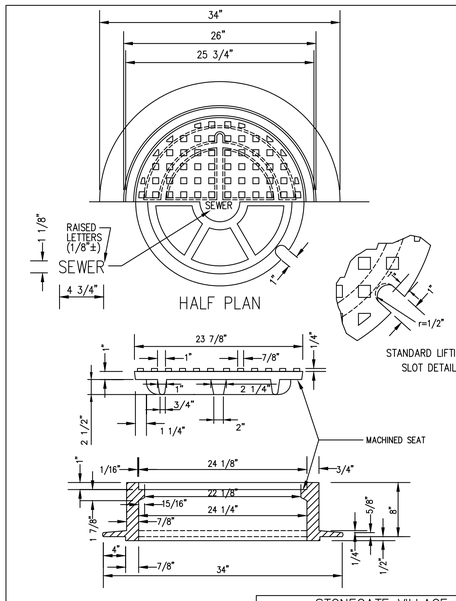

NOTE:

1. Casting Specifications: ASTM A-48 With A Minimum Tensile Strength Of 25 KSI (Class 25)
2. All Casting To Be Dipped In Asphalt Base Paint (Or Approved Equal).
3. Casting Shall Be As Specified Below Or Equal:

Comco Foundry Inc C-1161
Hutchinson Foundry & Steel Inc MH-400

STONEGATE VILLAGE
METROPOLITAN DICTRICT

24" DIAMETER RING AND COVER

SCALE: NONE | DATE: 4/00

APPROVED: RJG
DISTRICT ENGINEER

SHEET 17

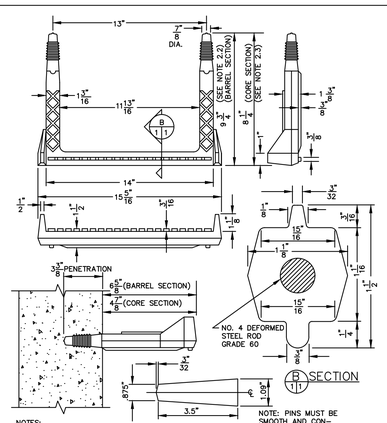

NOTES:

2.1 ASTM SPECIFICATIONS:
a) ASTM C-478
b) ASTM A-615 GRADE 60 (STEEL ROD)
c) ASTM 2146-69, TYPE II, GRADE 16906 (POLYPROPYLENE)

2.2 STEPS INSTALLED IN MANHOLE BARREL SECTIONS OR VERTICAL WALLS OF STRUCTURE SHALL HAVE A 9-3/4 INCH LEG AND SHALL PROJECT FROM THE WALL 6-5/8 INCHES.

2.3 STEPS INSTALLED IN MANHOLE CONE SECTIONS SHALL HAVE AN 8-1/4 INCH LEG AND SHALL PROJECT FROM THE WALL 4-7/8 INCHES.

2.4 ALL STEPS SHALL HAVE A PENETRATION DEPTH INTO THE WALL OF 3-3/8 INCHES.

2.5 STEPS SHALL BE INSTALLED BY THE "PRESS-FIT" METHOD UTILIZING A SPECIALLY TAPERED PIN TO FORM THE INSERT HOLE AS SHOWN.

2.6 INSTALLED STEPS SHALL BE CAPABLE OF WITHSTANDING A PULL OUT FORCE OF 2500 P.S.I. PER LEG FOR A MINIMUM PERIOD OF TWO MINUTES.

2.7 STEPS SHALL BE INSTALLED BY THE "PRESS-FIT" METHOD EXCLUSIVELY FOLLOWING MANUFACTURER'S RECOMMENDED PROCEDURE AND SHALL NOT BE GROUTED IN PLACE.

POLYPROPYLENE REINFORCED PLASTIC STEP

STONEGATE VILLAGE
METROPOLITAN DICTRICT

POLYPROPYLENE REINFORCED PLASTIC MANHOLE STEP

SCALE: NONE | DATE: 4/00

APPROVED: RJG
DISTRICT ENGINEER

SHEET 20

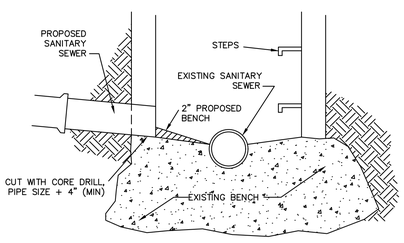

MANHOLE INVERT TIE-IN

STONEGATE VILLAGE
METROPOLITAN DICTRICT

MANHOLE INVERT TIE-IN DETAIL

SCALE: NONE | DATE: 4/00

APPROVED: RJG
DISTRICT ENGINEER

SHEET 22

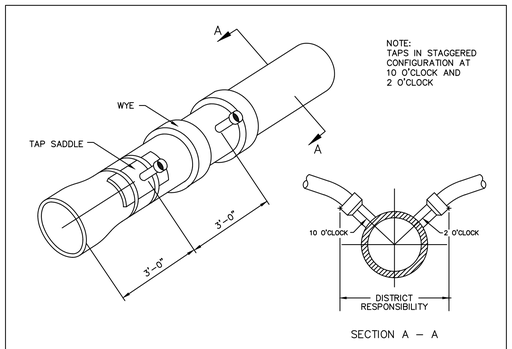

SEWER

Service connections – Sewer service connections shall be positioned at either the 2 o'clock or the 10 o'clock position on the circumference of the sewer main. On new installations, tee or wye fittings shall be used. When tapping into existing sewer main, a saddle connection and approved coring method shall be used. The minimum distance between service connections made along the pipe shall be 3 feet. The minimum distance from either the bell or spigot end of a pipe shall be 3 feet. The minimum distance from the center of a manhole to a service connection shall be either 7 feet or the transition point from the manhole trench to the normal pipe trench, whichever is greater. A maximum of 4 sewer service connections shall be allowed per 20 foot length of pipe. In a cases, a specific soils investigation should be conducted to assure that the external loading will be within allowable limits regardless of the number of taps involved.

DOMESTIC SEWER TAPPING DETAIL

STONEGATE VILLAGE
METROPOLITAN DICTRICT

DOMESTIC SEWER TAPPING DETAIL

SCALE: NONE | DATE: 4/00

APPROVED: RJG
DISTRICT ENGINEER

SHEET 27

DRAWN BY | REVISIONS | DATE

Manhard CONSULTING LTD
7600 East Orchard Road, Suite 150-N, Greenwood Village, CO 80111 ph:303.708.0500 manhard.com
Civil Engineers | Surveyors | Water Resource Management | Construction Management

COMPARK VILLAGE SOUTH, FILING NO 1
TOWN OF PARKER, COLORADO
SANITARY SEWER DETAILS

PROJ. MGR.: RJM
PROJ. ASSOC.: GTI
DRAWN BY:
DATE: 7/2019

SHEET 6 OF 9

PENDING APPROVAL - NOT FOR CONSTRUCTION

© 2018 MANHARD CONSULTING, LTD. ALL RIGHTS RESERVED

Plotted: 9/18/2019 4:49 PM Dwg Name: P:\Cpdc3\ComSouth04-Master Sin & Water\dwg\Eng\Final Drawing\Plan Set\Offsite\CLCPK03 Waterline Bore\Construction Plans\SANITARY DETAILS.dwg Updated By: SGroth

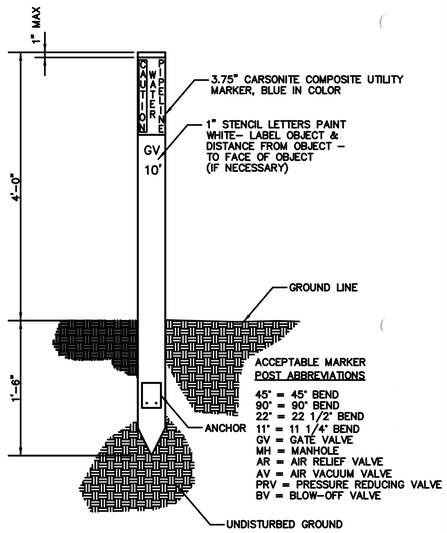

NOTE:

1. USE MARKER POST IN AREAS WHERE UTILITY CANNOT BE LOCATED FROM OTHER IMPROVEMENTS.

CARSONITE MARKER POST SEWER DETAIL

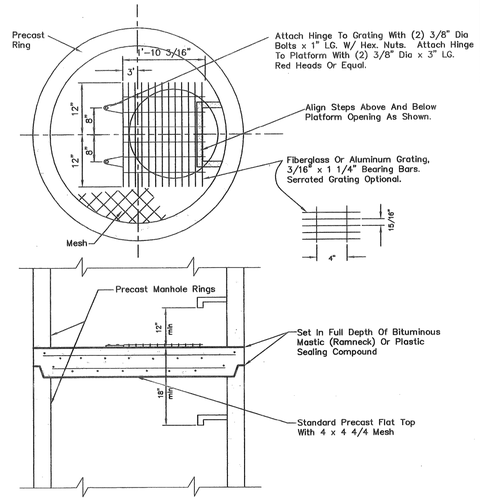

NOTES:

1.1 Maximum distance between platforms shall be 15' vertically.

1.2 Minimum distance between platforms shall be 10' vertically.

STONEGATE VILLAGE METROPOLITAN DICTRICT

INTERMEDIATE PLATFORM FOR MANHOLES OVER 20' DEPTH

SCALE: NONE DATE: 4/00

APPROVED: RJG DISTRICT ENGINEER

SHEET 14

2000 REVISION

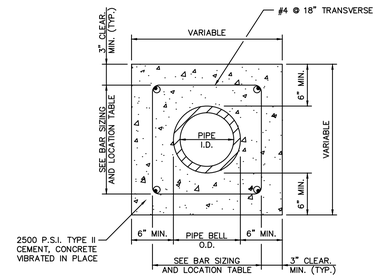

REINFORCEMENT STEEL

PIPE I.D.	LONGITUDINAL BARS – LOCATION		
4 IN.	4–NO. 4 BARS	1 EACH	CORNER
6 IN.	4–NO. 4 BARS	1 EACH	CORNER
8 IN.	4–NO. 4 BARS	1 EACH	CORNER
10 IN.	8–NO. 4 BARS	3 EACH	SIDE
12 IN.	8–NO. 4 BARS	3 EACH	SIDE
15 IN.	8–NO. 4 BARS	3 EACH	SIDE
18 IN.	8–NO. 4 BARS	3 EACH	SIDE
21 IN.	12–NO. 4 BARS	4 EACH	SIDE
24 IN.	12–NO. 4 BARS	4 EACH	SIDE
27 IN.	12–NO. 4 BARS	4 EACH	SIDE
30 IN.	12–NO. 4 BARS	4 EACH	SIDE
33 IN.	12–NO. 4 BARS	4 EACH	SIDE
36 IN.	16–NO. 4 BARS	5 EACH	SIDE

NOTE:

THE DISTRICT SHALL REVIEW THIS DETAIL FOR USE ON A CASE BY CASE BASIS. SPECIAL ENCASEMENTS MAY BE REQUIRED AT CREEK CROSSINGS AND CONDUIT CROSSINGS.

INSPECTION POLICY:

1. ALL SERVICE INSPECTIONS MUST BE SCHEDULED WITH THE DISTRICT ENGINEER'S OFFICE (293–8107) AT LEAST 24 HOURS IN ADVANCE OF THE REQUESTED INSPECTION.
2. SERVICE INSPECTIONS WILL OCCUR BETWEEN 1:00 P.M. AND 4:00 P.M. SPECIFIC INSPECTION TIMES ARE NOT AVAILABLE.
3. IF THE CONTRACTOR IS NOT READY FOR INSPECTION WHEN THE INSPECTOR ARRIVES AT THE SITE, A RE–INSPECTION WILL HAVE TO BE SCHEDULED IN ACCORDANCE WITH NOTES 1 AND 2 ABOVE.
4. SHOULD THE SERVICE LINES BE DAMAGED BY LATER CONSTRUCTION, AN INSPECTION OF THE REPAIR WILL BE REQUIRED IN ACCORDANCE WITH NOTES 1 AND 2 ABOVE.
5. THE CONTRACTOR SHALL LEAVE ALL PIPE AND FITTINGS EXPOSED FOR THE INSPECTOR TO OBSERVE. INSPECTORS WILL NOT ENTER ANY EXCAVATIONS TO CHECK MATERIALS. THE TOP LAYER OF BEDDING CAN BE ADDED AFTER THE INSPECTION HAS BEEN COMPLETED.
6. ALL EXCAVATIONS SHALL BE IN ACCORDANCE WITH OSHA STANDARDS.

INSTALLATION NOTES:

SEWER

1. ACCEPTABLE PIPE MATERIALS ARE TO BE SDR 35 PVC PIPE, ABS PIPE AND CAST IRON CLASS 22 SOIL PIPE. APPROVED BEDDING IS TO BE SQUEEGEE.
2. NO–HUB CLAMPS SHALL BE USED TO JOIN 2 MALE PIPE ENDS WITH A MAXIMUM DEFLECTION OF 3°.
3. MINIMUM GRADE SHALL BE 2%.
4. INSTALLATION SHALL INCLUDE NO MORE THAN 3 BENDS. 90° BENDS ARE NOT ALLOWED. SOLVENT WELDED PIPE WILL NOT BE ALLOWED.
5. CLEAN–OUTS SHALL BE INSTALLED AT 100' INTERVALS. CLEAN–OUTS ARE NOT REQUIRED FOR SERVICES LESS THAN 100'.
6. STRESSING OF THE PIPE BETWEEN FITTINGS WILL NOT BE ALLOWED.

STONEGATE VILLAGE METROPOLITAN DICTRICT

DISTRICT POLICIES & INSTALLATION NOTES FOR SEWER SERVICES

SCALE: NONE DATE: 4/00

APPROVED: RJG DISTRICT ENGINEER

SHEET 29

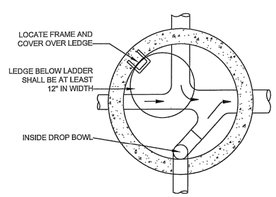

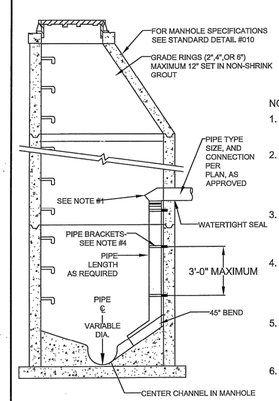

NOTE:

1. DROP BOWL AS MANUFACTURED BY RELINER-DURAN INC. OR APPROVED EQUAL.
2. DROP BOWL TO BE SIZED PER MANUFACTURER'S RECOMENDATIONS (INFORMATION AVAILABLE @ RELINER.COM) OR AS REQUIRED BY DISTRICT OR CITY.
3. PIPE AND FITTING FOR DROP ASSEMBLY SHALL BE: DUCTILE IRON, AWWA C-900 OR PVC ASTM 3034 SDR 35.
4. STAINLESS ADJUSTABLE PIPE BRACKETS AS MANUFACTURED BY RELINER-DURAN INC. OR APPROVED EQUAL. (INFORMATION AVAILABLE @ RELINER.COM).
5. NO MORE THAN ONE DROP BOWL PER MANHOLE WITHOUT WRITTEN APPROVAL BY DISTRICT OR CITY.
6. WRITTEN APPROVAL BY DISTRICT OR CITY IS REQUIRED FOR DROP BOWL INSTALATION ON PIPELINES WITH A SLOPE OF 5% OR GREATER.

INSIDE DROP MANHOLE CONNECTION FOR SANITARY SEWER PRIVATE SERVICE

DATE	REVISIONS	DRAWN BY

Manhard CONSULTING LTD
7600 East Orchard Road, Suite 150-N, Greenwood Village, CO 80111 ph:303.708.0500 manhard.com
Civil Engineering | Surveying & Geomatics | Water Resources
Water Resource Management | Construction Management

COMPARK VILLAGE SOUTH, FILING NO 1

TOWN OF PARKER, COLORADO

SANITARY SEWER DETAILS

PROJ. MGR.: RJM
PROJ. ASSOC.: GTI
DRAWN BY:
DATE: 7/2019

SHEET 7 OF 9

© 2018 MANHARD CONSULTING, LTD. ALL RIGHTS RESERVED

PENDING APPROVAL - NOT FOR CONSTRUCTION

Plotted: 9/18/2019 4:49 PM Dwg Name: P:\Cpjks3\ConSouth04-Master San & Water\dwg\Eng\Final Drawings\Plan Set\Offsite\CEPK3 Waterline Bore\Construction Plans\SANITARY DETAILS2.dwg Updated By: SGroth

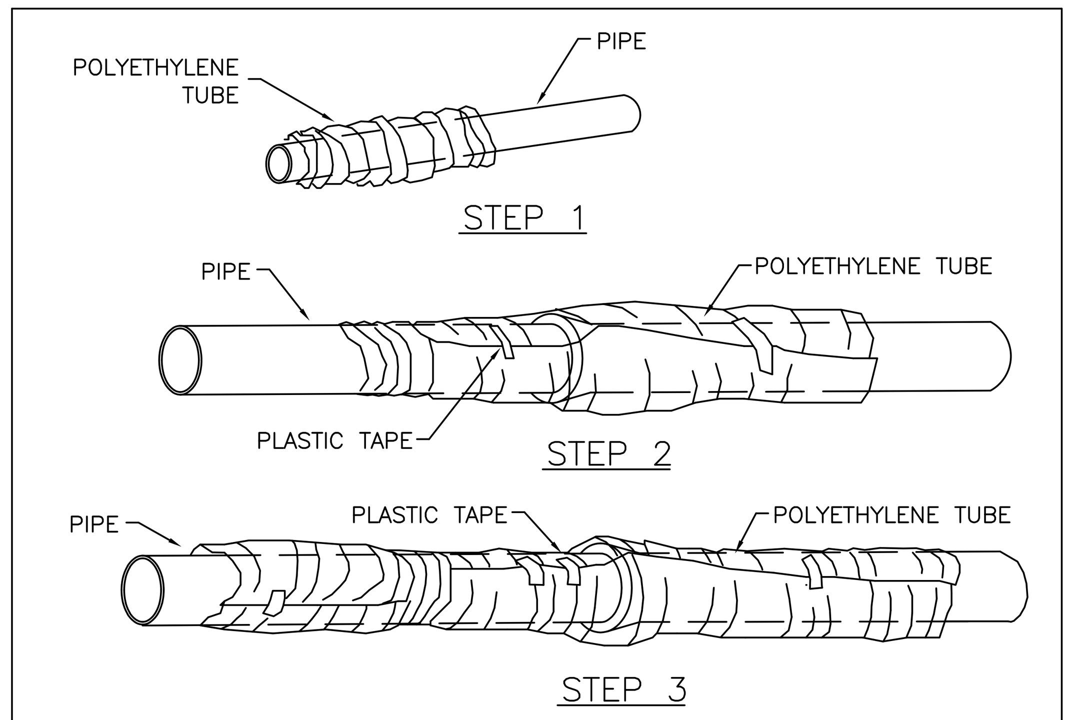

FIELD INSTALLATION – POLYETHYLENE WRAP

STEP 1 – PLACE TUBE OF POLYETHYLENE MATERIAL ON PIPE PRIOR TO LOWERING IT INTO TRENCH.

STEP 2 – PULL THE TUBE OVER THE LENGTH OF THE PIPE. TAPE TUBE TO PIPE AT JOINT. FOLD MATERIAL AROUND THE ADJACENT SPIGOT END AND WRAP WITH TAPE TO HOLD THE PLASTIC TUBE IN PLACE.

STEP 3 – OVERLAP FIRST TUBE WITH ADJACENT TUBE AND SECURE WITH PLASTIC ADHESIVE TAPE. THE POLYETHYLENE TUBE MATERIAL COVERING THE PIPE SHALL BE LOOSE. EXCESS MATERIAL SHALL BE NEATLY DRAWN UP AROUND THE PIPE BARREL, FOLDED ON TOP OF PIPE AND TAPED IN PLACE.

STONEGATE VILLAGE METROPOLITAN DISTRICT
POLYETHYLENE WRAP
SCALE: NONE DATE: 4/00
APPROVED: RJG
DISTRICT ENGINEER

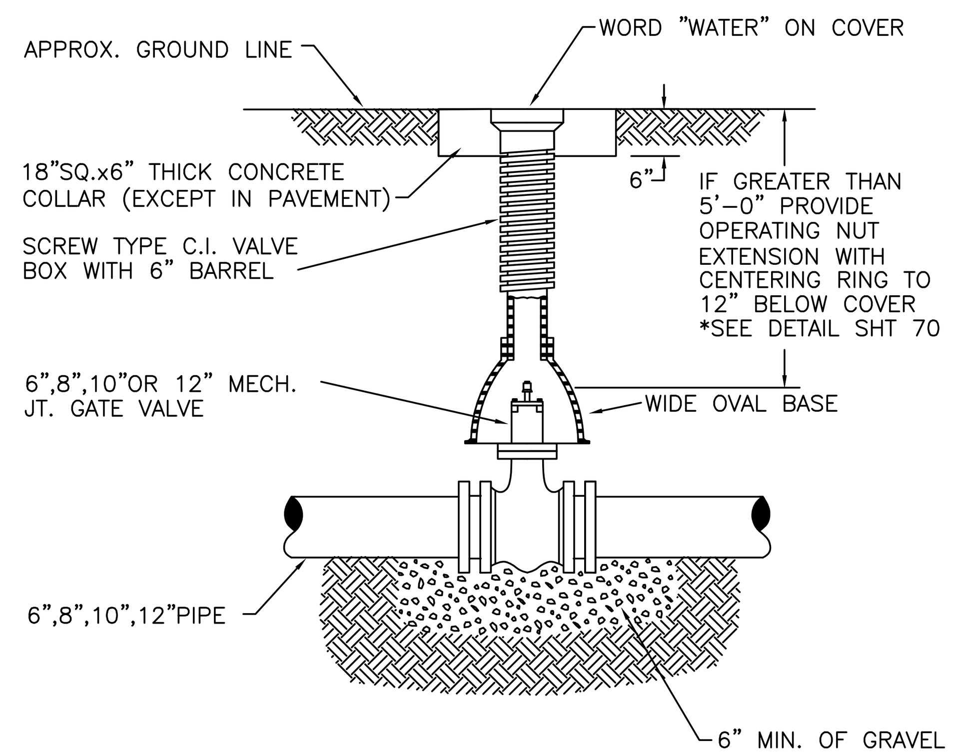

6–INCH VALVE BOXES

Materials:

Valve box parts shall be made from gray cast iron, ASTM A48 Class 20A.

Use of an aluminum alloy as a casting material is not acceptable.

Approved Patterns:

Valve boxes shall be the three–piece adjustable screw type and the following two patterns are acceptable.

1. Tyler screw–type 6–inch cast iron valve box assembly series 6860 with No. 160 oval base.
2. Clay and Bailey screw–type 6–inch cast iron valve box assembly No. P–108 with No. 160 large oval base.

NOTES:
1. VALVE BOXES SHALL BE:
   A. TYLER SCREW–TYPE 6"C.I.ASSY. SERIES 6860 W/NO.160 LARGE OVAL BASE OR
   B. CLAY & BAILEY SCREW–TYPE 6" C.I. ASSY. NO.P–108 W/NO.160 LARGE OVAL BASE.
2. ALL C.I. SHALL BE WRAPPED WITH 8 MIL. MIN. THICKNESS POLYETHYLENE.
3. VALVE NUT SHALL BE CENTERED.
4. VALVE BOX SHALL BE PLUMB.

STONEGATE VILLAGE METROPOLITAN DISTRICT
VALVE BOX DETAIL
SCALE: NONE DATE: 4/00
APPROVED: RJG
DISTRICT ENGINEER

INSPECTION POLICY:

1. ALL SERVICE INSPECTIONS MUST BE SCHEDULED WITH THE DISTRICT OFFICE (303)841–2058 AT LEAST 24 HOURS IN ADVANCE OF THE REQUESTED INSPECTION.
2. SERVICE INSPECTIONS WILL OCCUR BETWEEN 8:00 A.M. AND 3:00 P.M. SPECIFIC INSPECTION TIMES ARE NOT AVAILABLE.
3. IF THE CONTRACTOR IS NOT READY FOR INSPECTION WHEN THE INSPECTOR ARRIVES AT THE SITE, A RE–INSPECTION WILL HAVE TO BE SCHEDULED IN ACCORDANCE WITH NOTES 1 AND 2 ABOVE.
4. SHOULD THE SERVICE LINES BE DAMAGED BY LATER CONSTRUCTION, AN INSPECTION OF THE REPAIR WILL BE REQUIRED IN ACCORDANCE WITH NOTES 1 AND 2 ABOVE.
5. THE CONTRACTOR SHALL LEAVE ALL PIPE AND FITTINGS EXPOSED FOR THE INSPECTOR TO OBSERVE. INSPECTORS WILL NOT ENTER ANY EXCAVATIONS TO CHECK MATERIALS. THE TOP LAYER OF BEDDING CAN BE ADDED AFTER THE INSPECTION HAS BEEN COMPLETED.
6. ALL EXCAVATIONS SHALL BE IN ACCORDANCE WITH OSHA STANDARDS.

INSTALLATION NOTES:

WATER

1. ACCEPTABLE PIPE MATERIALS SHALL BE K–COPPER TUBING. (3/4" MIN.)
2. APPROVED BEDDING TO BE SQUEEGEE.
3. ONLY ONE COUPLING WILL BE ALLOWED BETWEEN THE STUB–IN AND BUILDING. A COUPLING MAY BE EITHER FLARED OR SILVER–SOLDERED. COMPRESSION COUPLINGS WILL NOT BE ALLOWED. MOVED CURB BOXES MUST BE INSPECTED BY PWSD PRIOR TO BURIAL.
4. A WATER SERVICE WHICH CROSSES A SEWER SERVICE CAN DO SO ONLY AT A 90°± ANGLE MAXIMUM, 45° ANGLE MINIMUM. WATER SERVICES SHALL BE LOCATED A MINIMUM OF 18" ABOVE SEWER SERVICE.
5. WATER SERVICE FOUNDATION PENETRATIONS SHALL BE WATERPROOFED USING MASTIC OR OTHER APPROVED METHOD.
6. STOPBOX MUST BE PLUMB AND CENTERED OVER NUT, AND MUST BE SET AT OR, SLIGHTLY ABOVE FINISHED GRADE.
7. STOPBOXES MUST BE SET AT BACK OF SIDEWALK ONLY (TOUCHING) NOT AT CURBS.
8. NO CRAWLSPACE MOUNTED METERS ALLOWED.
9. WATERLINE MUST BE ATTACHED TO A SUPPORT BOARD THAT IS MOUNTED TO THE WALL.
10. NO VOIDS ALLOWED UNDER WATERLINES FROM STOP BOX TO FOUNDATION.
11. METER SHOULD BE LOCATED ON SAME SIDE OF HOUSE AS CURBSTOP IF POSSIBLE.
12. WATERLINES PASSING UNDER DRIVEWAYS NEED TO BE SLEEVED IN 4" P.V.C. AND HAVE EXPRESS PERMISSION OF THE DISTRICT.
13. YOKES SHOULD BE MOUNTED NO GREATER THAN 6 INCHES ABOVE BOTTOM SHUTTOFF. EACH SERVICE MUST INCLUDE A STOP AND WASTE VALVE AND A PRESSURE REDUCING VALVE LOCATED WITHIN THE ABOVE REFERENCED 6 INCH SPACE.
14. NO SPLICES OR FLARED COUPLINGS ALLOWED ON WATERLINES. SILVER SOLDIER JOINTS MUST BE USED IN MOVING STOPBOXES, AND SILVER SOLDIER JOINT MUST BE INSPECTED BY P.W.S.D. PRIOR TO BURIAL.
15. ONLY 3/4" (JUMPER OR CHEATER) PIPES (RESIDENCES) ARE ALLOWED. (JUMPER OR CHEATER) PIPES WILL BE REMOVED PRIOR TO METER SET DATE.
16. ALL SERVICES WILL BE PERMANANTELY MARKED ON CURB FACE AS FOLLOWS: "X" FOR SANITARY SEWER SERVICE "V" FOR WATER SERVICES

STONEGATE VILLAGE METROPOLITAN DISTRICT
DISTRICT POLICIES & INSTALLATION NOTES FOR WATER SERVICES
SCALE: NONE DATE: 4/00
APPROVED: RJG
DISTRICT ENGINEER

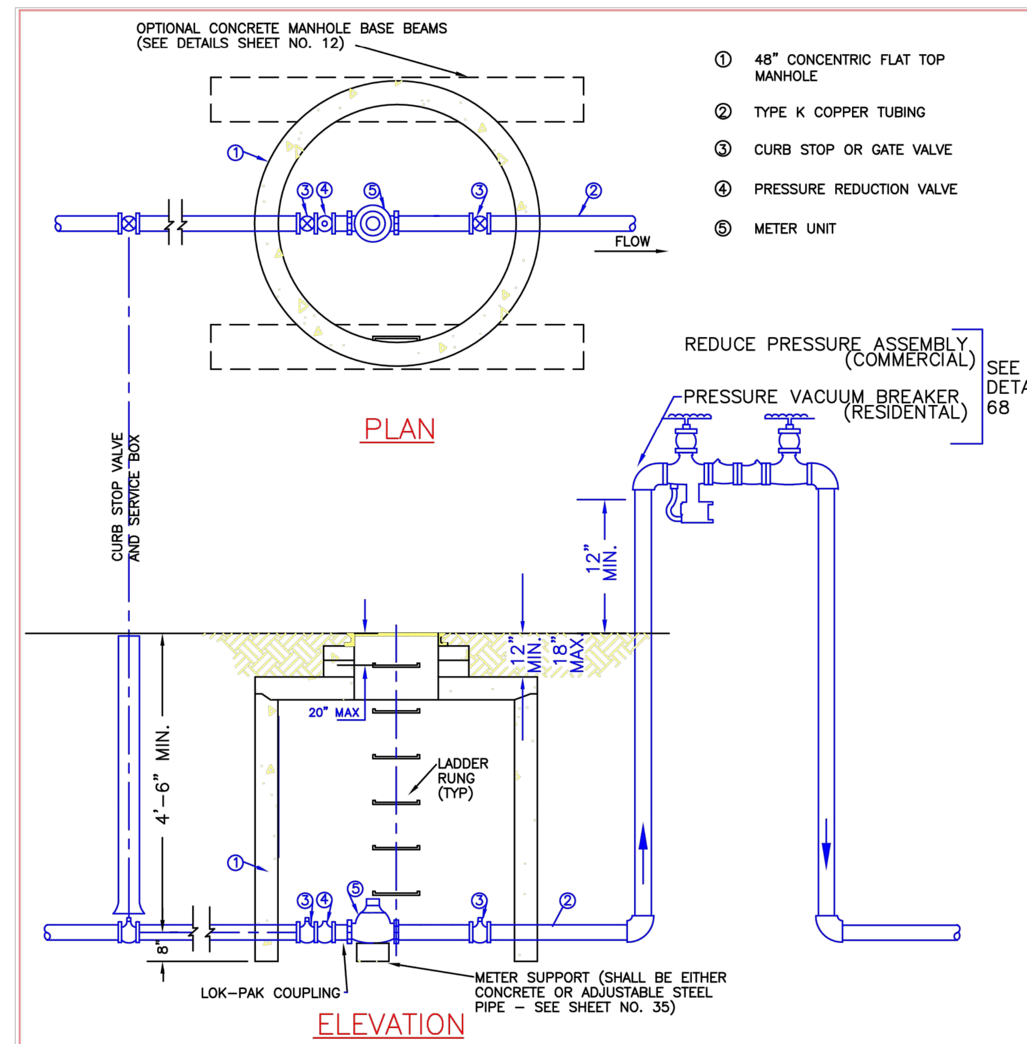

① 48" CONCENTRIC FLAT TOP MANHOLE
② TYPE K COPPER TUBING
③ CURB STOP OR GATE VALVE
④ PRESSURE REDUCTION VALVE
⑤ METER UNIT

NOTES:

1 – MANHOLE BASE BEAMS SHALL BE REQUIRED FOR INSTALLATIONS IN DRIVEWAYS, OR PARKING AREAS.
2 – A 48" DIA. MANHOLE PIT WILL ACCOMODATE 1 1/2" AND 2" SPLIT BASE METERS.
3 – JOINTS INSIDE METER VAULT SHALL BE EITHER THREADED OR SOLDERED WITH 95–5 TINANTIMONY SOLDER.
4 – SEE SECTION 10.9, WATER SYSTEM SPECIFICATIONS FOR GENERAL METER NOTES.
5 – NO CONCRETE TO BE LAID IN FLOOR OF METER M.H.
6 – METER SHALL BE FLANGED WITH BRASS COMPANION FLANGES.
7 – NO CONNECTIONS OR CHANGES IN PIPE DIAMETER SHALL BE MADE IN THE METER PIT OR IN THE DISTANCE OF FIVE FEET BEYOND THE METER PIT ON THE OUTLET SIDE.
8 – LADDER RUNGS SHALL BE ON OPPOSITE SIDE OF BYPASS.
9 – (JUMPER OR CHEATER) PIPES TO BE REMOVED BEFORE METER SET DATE.

IRRIGATION ONLY

NOT TO BE USED IN COMMERCIAL WITHOUT EXPRESS PERMISSION OF THE DISTRICT MANAGER.

STONEGATE VILLAGE METROPOLITAN DISTRICT
OUTSIDE SETTING FOR 1 1/2" & 2" METER FOR IRRIGATION
SCALE: NONE DATE: 4/00
APPROVED: RJG
DISTRICT ENGINEER

2000 REVISION SHEET 49

LENGTH OF TIED PIPE

PIPE SIZE	4" D	4" L	4" G	6" D	6" L	6" G	8" D	8" L	8" G	12" D	12" L	12" G	16" D	16" L	16" G	20" D	20" L	20" G	24" D	24" L	24" G
TEE OR VALVE	3/4"	6.0'	M.S.	3/4"	13.0'	M.S.	3/4"	20.0'	M.S.	3/4"	40.0'	M.S.	3/4"	60.0'	*H.S.*	1"	80.0'	*H.S.*	–	155.0'	–
PLUG OR 90° BEND	3/4"	6.0'	M.S.	3/4"	13.0'	M.S.	3/4"	20.0'	M.S.	3/4"	40.0'	M.S.	3/4"	60.0'	*H.S.*	1"	80.0'	*H.S.*	–	155.0'	–
45° BEND	3/4"	2.0'	M.S.	3/4"	4.0'	M.S.	3/4"	6.0'	M.S.	3/4"	11.0'	M.S.	1"	18.0'	M.S.	3/4"	24.0'	*H.S.*	–	45.0'	–
22–1/2° BEND	3/4"	1.0'	M.S.	3/4"	1.0'	M.S.	3/4"	2.0'	M.S.	3/4"	3.0'	M.S.	3/4"	5.0'	M.S.	3/4"	6.0'	M.S.	–	12.0'	–
11–1/4° BEND	3/4"	0.0'	M.S.	3/4"	0.0'	M.S.	3/4"	1.0'	M.S.	3/4"	1.0'	M.S.	3/4"	1.0'	M.S.	3/4"	2.0'	M.S.	–	3.0'	–

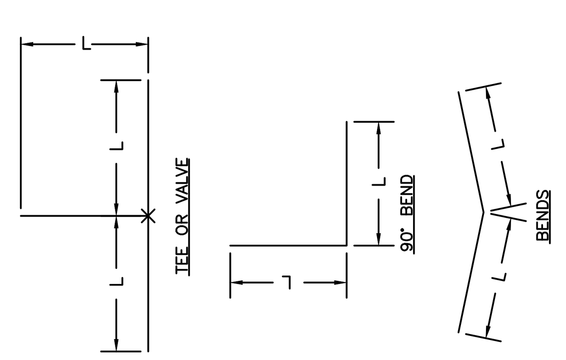

NOTES:

1. LENGTH OF TIED PIPE MEASURED EACH WAY FROM VALVES AND BENDS.
2. CLAMPS AND RODS NOT ALLOWED FOR 24" AND LARGER PIPES.
3. D = DIAMETER, L = LENGTH, G = GRADE, M.S. = MILD STEEL, *H.S.* = HIGH STRENGTH
4. MINIMUM 4.5' GROUND COVER REQUIRED.
5. BASED ON 150 PSI INTERNAL PRESSURE.
6. M.S. MEANS MILD STEEL ROD A.S.T.M. STANDARD DESIGNATION A–36.
7. *H.S.* MEANS HIGH STRENGTH ROD A.S.T.M. STANDARD DESIGNATION A–193 GRADE B–7.
8. NUTS SHALL BE A.S.T.M. STANDARD DESIGNATION A–307 GRADE A OR B HEXAGON HEAVY SERIES.
9. SEE TIE ROD DETAIL DRAWING. ALSO, TIE ROD COUPLING DETAILS, CLAMP DETAILS AND SET CLAMP DETAILS.
10. LENGTH REFERS TO THE AMOUNT OF PIPE WHICH MUST BE TIED TOGETHER AND IS NOT NECESSARILY THE LENGTH OF THE RODS.
11. STAR BOLTS NOT ALLOWED ON PIPE LARGER THAN 16".
12. MINIMUM OF 4 RODS REQUIRED ON 16" PIPE IF STAR BOLTS ANE USED.
13. TEES ARE TO BE RODDED ON BRANCH ONLY.
14. ALL VALVES TO BE RODDED IN BOTH DIRECTIONS.

STONEGATE VILLAGE METROPOLITAN DISTRICT
LENGTH OF TIED PIPE
SCALE: NONE DATE: 4/00
APPROVED: RJG
DISTRICT ENGINEER

PIPE BEDDING:

(a) Installation of Bedding and Pipe: After completion of the trench excavation and proper preparation of the foundation, six inches (6") of bedding material shall be placed on the trench bottom for support under the pipe. Bell holes shall be dug deep enough to provide a mimimum of two inches (2") of clearance between the bell and bedding material. All pipe shall be installed in such a manner as to insure full support of the pipe barrel over its entire length. After the pipe is adjusted for line and grade, and the joint is made, the bedding material shall be carefully placed and tamped under the haunches of the pipe and in the previously dug bell holes.

Tamping is herein defined as the act of placing approved bedding material under the haunches of the pipe, paying particular attention to voids, bell holes, and sling holes. The purpose of tamping is to ensure uniform support for the pipe.

The limits of bedding shall be from six inches (6") below the bottom of the pipe to twelve inches (12") above the top of the pipe. Approved backfill may then be installed to the groundline. See Section 6 of these Standards for backfill and compaction of backfill.

Compaction of bedding is not required. The only requirement is sufficient tamping to achieve uniform support under the pipe. See Sheet 8 of the Standard Drawings for a typical trench cross section.

(b) Bedding Material: The bedding material shall be a clean well–graded sand or squeegee sand and shall conform to the following limits when tested by means of laboratory sieves:

Well–Graded Sand

Sieve Size	Total Percent Passing by Weight
3/8 inch	100
No. 4	95–100
No. 8	80–100
No. 16	50–85
No. 30	25–60
No. 50	10–30
No. 100	2–10
No. 200	0

Squeegee Sand

Sieve Size	Total Percent Passing by Weight
3/8 inch	100
No. 100	0–5

If approved by the District, fines form the trench walls and spoils pile may be used to provide uniform support for the pipe. No rock or stone larger than that allowed by the sieve analysis, or any other detri–mental substance, shall be placed closer to the pipe than six inches (6"). Approved bedding materials shall be stockpiled on the jobsite to be used in the event natural materials become unsatisfactory. The District reserves the right to require the use of the specified bedding material at any time.

STONEGATE VILLAGE METROPOLITAN DISTRICT
PIPE BEDDING
SCALE: NONE DATE: 4/00
APPROVED: RJG
DISTRICT ENGINEER

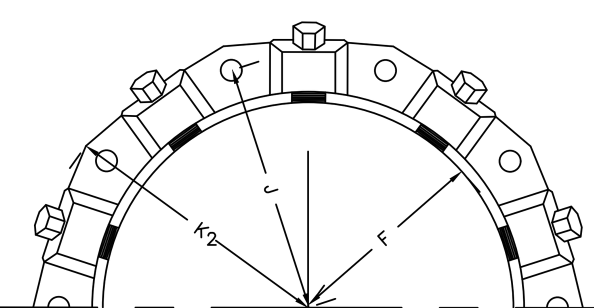

MECHANICAL JOINT RESTRAINT

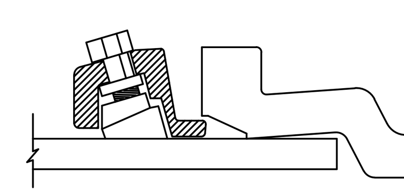

WEDGE DETAIL

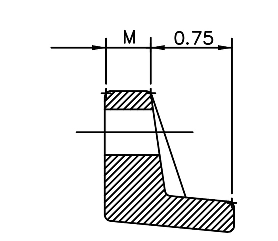

BOLT HOLE DETAIL

	NOMINAL PIPE SIZE	NO. OF BOLTS	NO. OF WEDGES	K2 INCHES	J INCHES	F INCHES	M INCHES	
PVC	4"	2	2					PVC
PVC	6"	6	3	11.12	9.5	7.00	0.88	PVC
PVC	8"	6	4	13.37	11.75	9.15	1.00	PVC
PVC	10"	8	6	15.62	14.00	11.20	1.00	PVC
PVC	12"	8	8	17.88	16.25	13.30	1.25	PVC
DI	4"	4	2					DI
DI	6"	6	3	11.12	9.5	7.00	0.88	DI
DI	8"	6	4	13.37	11.75	9.15	1.00	DI
DI	10"	8	6	15.62	14.00	11.20	1.00	DI
DI	12"	8	8	17.88	16.25	13.30	1.25	DI

NOTES:

1. REFER TO SHEET W–19 SECTION 6.10.
2. DIMENSIONS FOR 16" AND 20" D.I. PIPE NOT SHOWN.

STONEGATE VILLAGE METROPOLITAN DISTRICT
MECHANICAL JOINT RESTRAINT DETAILS
SCALE: NONE DATE: 4/00
APPROVED: RJG
DISTRICT ENGINEER

2000 REVISION SHEET 65

Manhard CONSULTING LTD
7600 East Orchard Road, Suite 150-N, Greenwood Village, CO 80111 ph:303.708.0500 manhard.com
Civil Engineering | Surveying & Geospatial Services | GIS
Water Resource Management | Construction Management

COMPARK VILLAGE SOUTH, FILING NO 1
TOWN OF PARKER, COLORADO
WATER DETAILS

PROJ. MGR.: RJM
PROJ. ASSOC.: GTI
DRAWN BY:
DATE: 7/2019

SHEET 8 OF 9

© 2018 MANHARD CONSULTING, LTD. ALL RIGHTS RESERVED

PENDING APPROVAL - NOT FOR CONSTRUCTION

Plotted: 9/18/2019 4:49 PM Dwg Name: P:\Crpk3\ComSouth04-Master San & Water\dwg\Eng\Final Drawings\Plan Set\Office\CLCPK3 Waterline Bore\Construction Plans\WATER DETAILS.dwg Updated By: SGroth

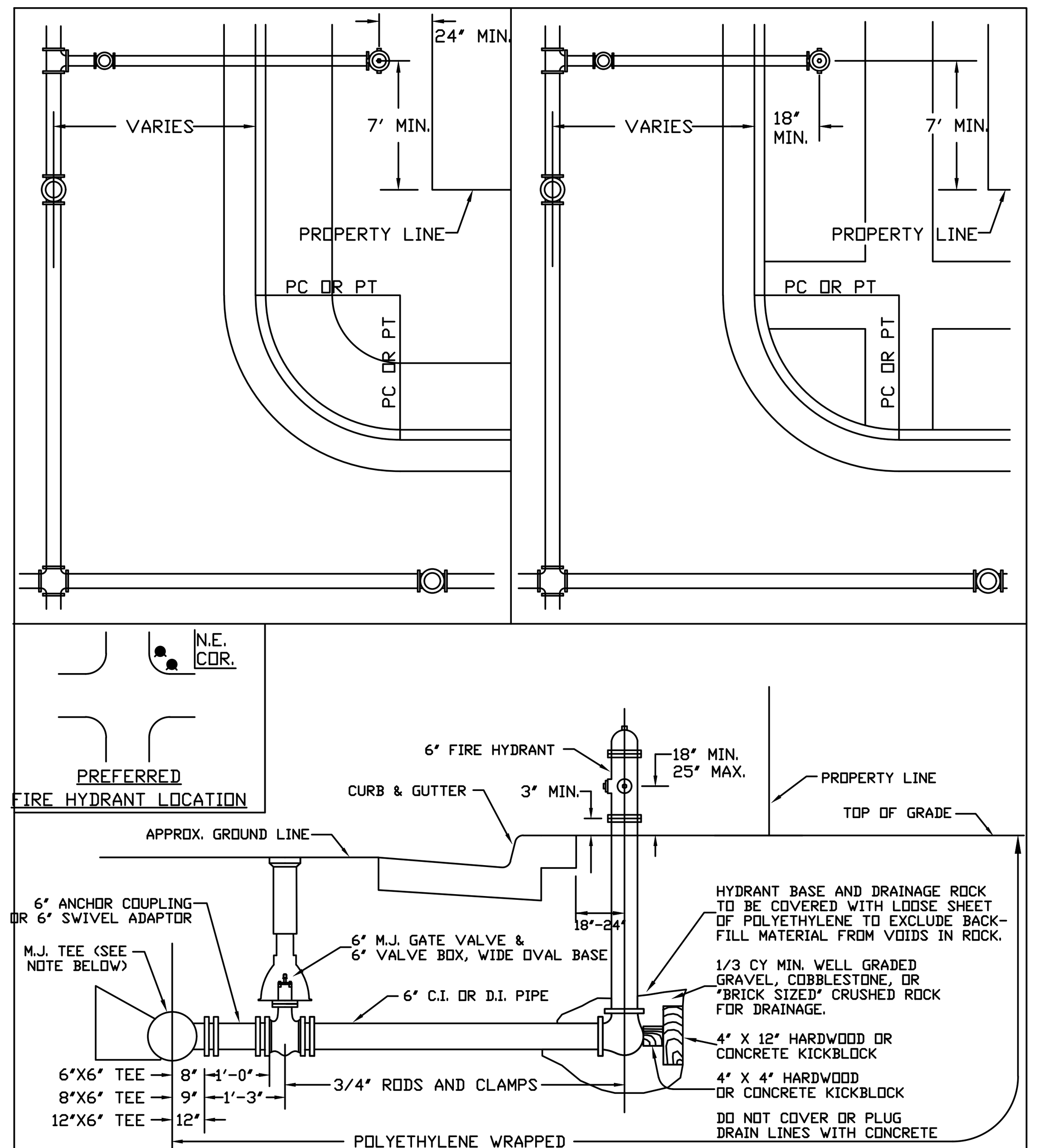

FIRE HYDRANTS

Manufacturer	Model No.	Options to be furnished
Mueller Company	Centurion Model 423	Furnish standard product, no additional options required.
Waterous Company	Pacer WB-67	Hydrant shall include a bronze bushed shoe providing bronze to bronze seating for the main valve complete with O-rings for sealing.

NOTES:

1. ALTERNATE TO THE ABOVE: FASTEN M.J. VALVE DIRECTLY TO A M.J. ANCHOR TEE (ALSO CALLED SWIVEL TEE.)
2. NO HORIZONTAL OR VERTICAL BENDS ARE ALLOWED IN FIRE HYDRANT BRANCH OR SPRINKLER LINES.
3. FOR ACCEPTABLE VALVE BOXES, SEE 34 OF 68.
4. NO PORTION OF FIRE HYDRANT MAY PROTRUDE INTO SIDEWALK AREA.

STONEGATE VILLAGE METROPOLITAN DISTRICT
FIRE HYDRANTS
LOCATION & INSTALLATION
SCALE: NONE DATE: 4/00
APPROVED: RJG
DISTRICT ENGINEER

PIPE LOCATION SYSTEM

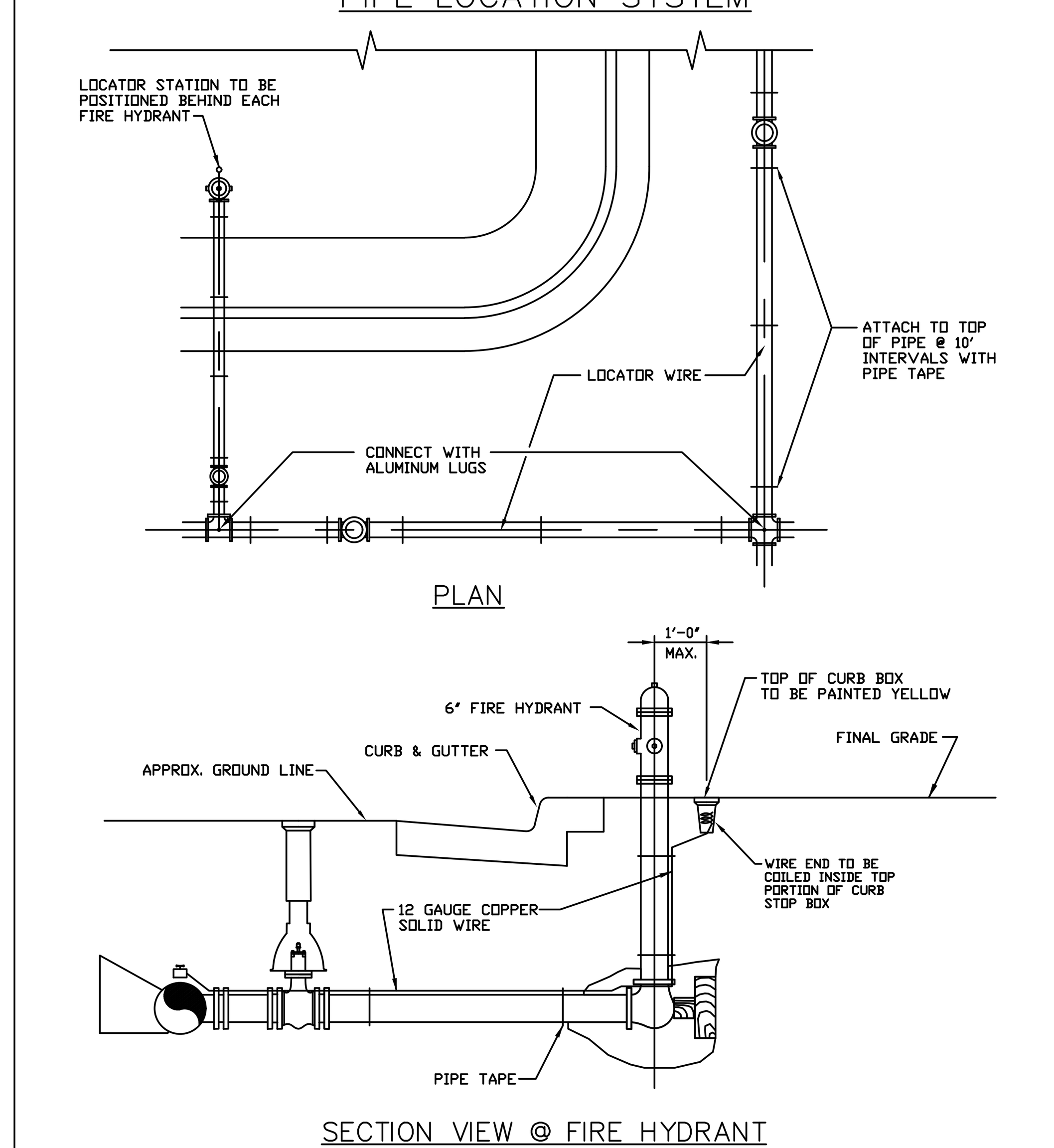

NOTES:

1. FOR USE ON ALL DUCTILE IRON AND PVC WATER MAINS.
2. LOCATOR STATION POSITION MAY BE MODIFIED AT THE DIRECTION OF THE DISTRICT ENGINEER.
3. A CONTINUITY TEST WILL BE REQUIRED PRIOR TO PROBATIONARY ACCEPTANCE.
4. A WIRE-IMPREGNATED BLUE LOCATION TAPE WILL BE CONSTRUCTED ABOVE EACH WATER SERVICE AND BURIED MAX. 1 FOOT BELOW GRADE. THIS IS NOT TO BE ATTACHED TO THE 12 GA. LOCATOR WIRE.

STONEGATE VILLAGE METROPOLITAN DISTRICT
LOCATOR WIRE DETAILS
SCALE: NONE DATE: 4/00
APPROVED: RJG
DISTRICT ENGINEER

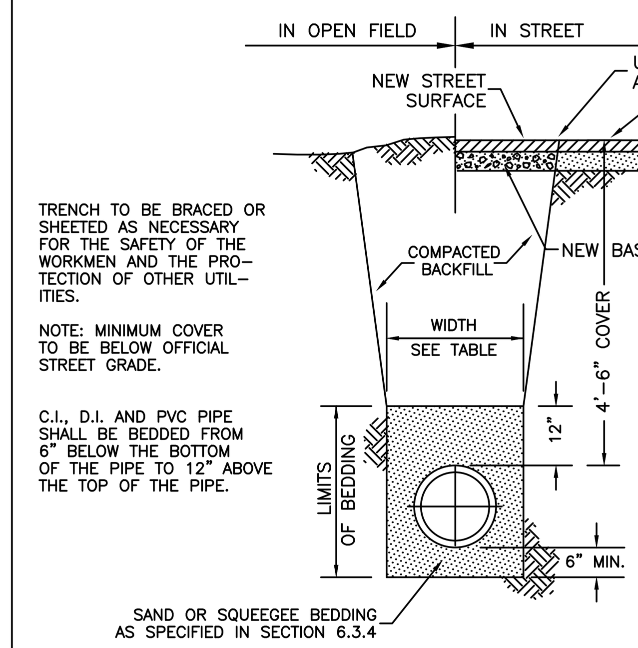

TRENCH TO BE BRACED OR SHEETED AS NECESSARY FOR THE SAFETY OF THE WORKMEN AND THE PROTECTION OF OTHER UTILITIES.

NOTE: MINIMUM COVER TO BE BELOW OFFICIAL STREET GRADE.

C.I., D.I. AND PVC PIPE SHALL BE BEDDED FROM 6" BELOW THE BOTTOM OF THE PIPE TO 12" ABOVE THE TOP OF THE PIPE.

PIPE DIAMETER	MINIMUM WIDTH	MAXIMUM WIDTH
4"	1'-4"	2'-4"
6"	1'-6"	2'-6"
8"	1'-8"	2'-8"
12"	2'-0"	3'-0"
16"	2'-4"	3'-4"
20"	2'-8"	3'-8"
24"	3'-0"	4'-0"

STANDARD TRENCH SECTION

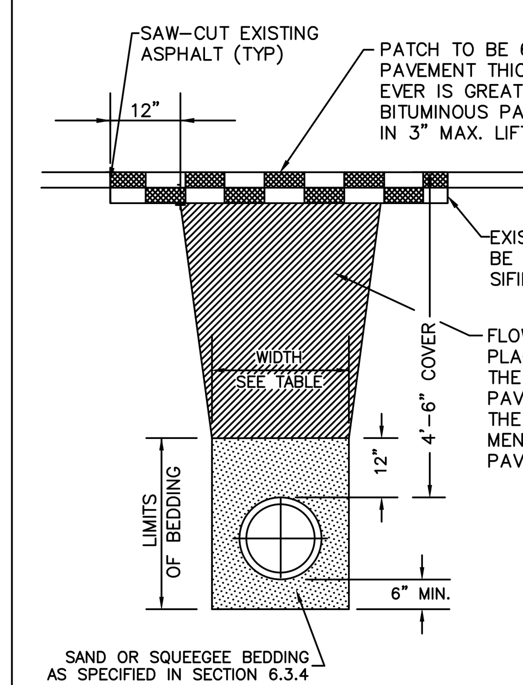

STREET CUT PATCH

STONEGATE VILLAGE METROPOLITAN DISTRICT
TYPICAL TRENCH SECTION
PIPE PROTECTION
SCALE: NONE DATE: 4/00
APPROVED: RJG
DISTRICT ENGINEER

NOTE:
PLUG SHALL BE MECHANICALLY RESTRAINED:
A – FOR SLEEVE TYPE MACHINED COUPLING PIPE TIE BACK TO NEXT COUPLING.
B – FOR BELL AND SPIGOT PIPE TIE TO BELL.

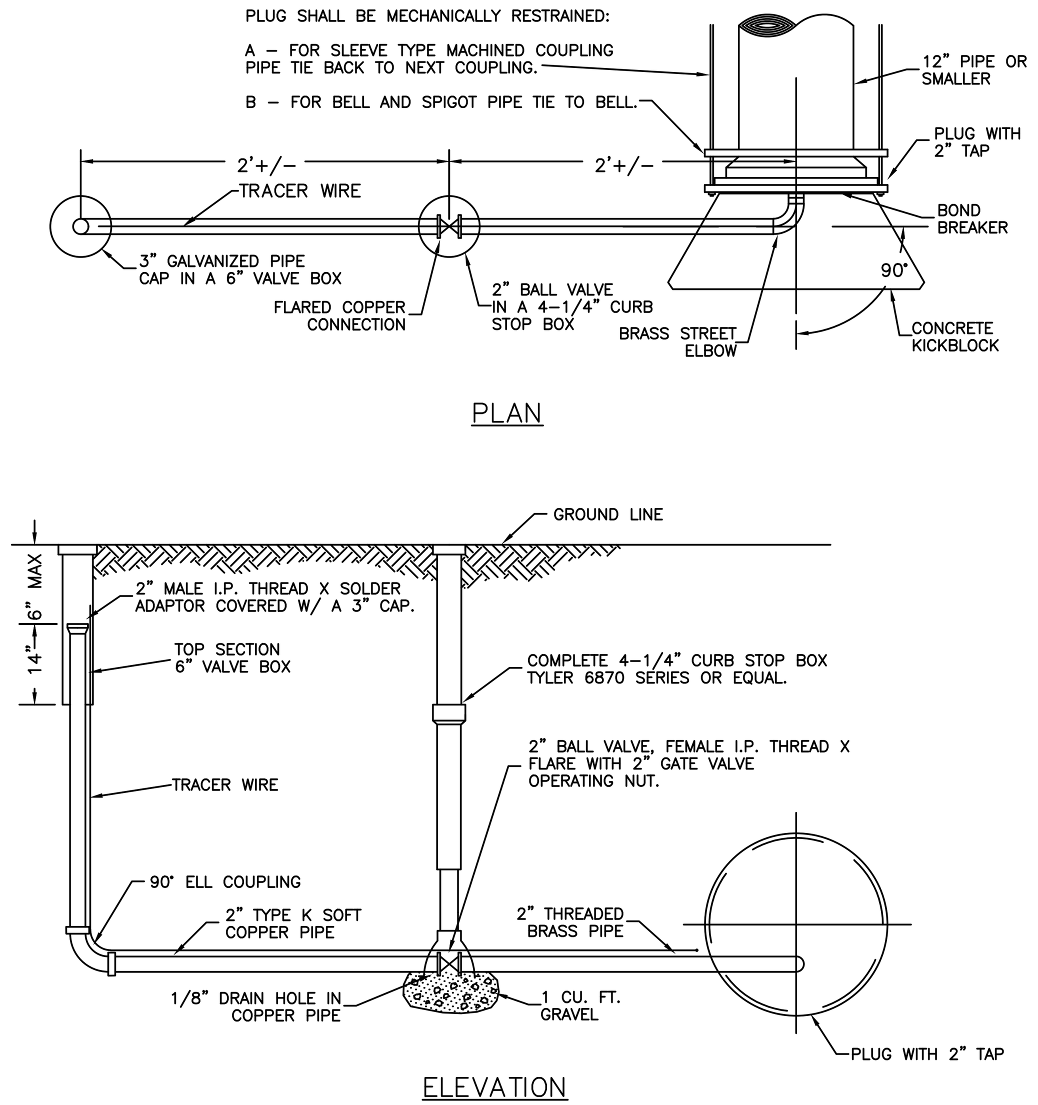

STONEGATE VILLAGE METROPOLITAN DISTRICT
BLOW-OFF INSTALLATION
FOR 12" & SMALLER PIPE
SCALE: NONE DATE: 4/00
APPROVED: RJG
DISTRICT ENGINEER

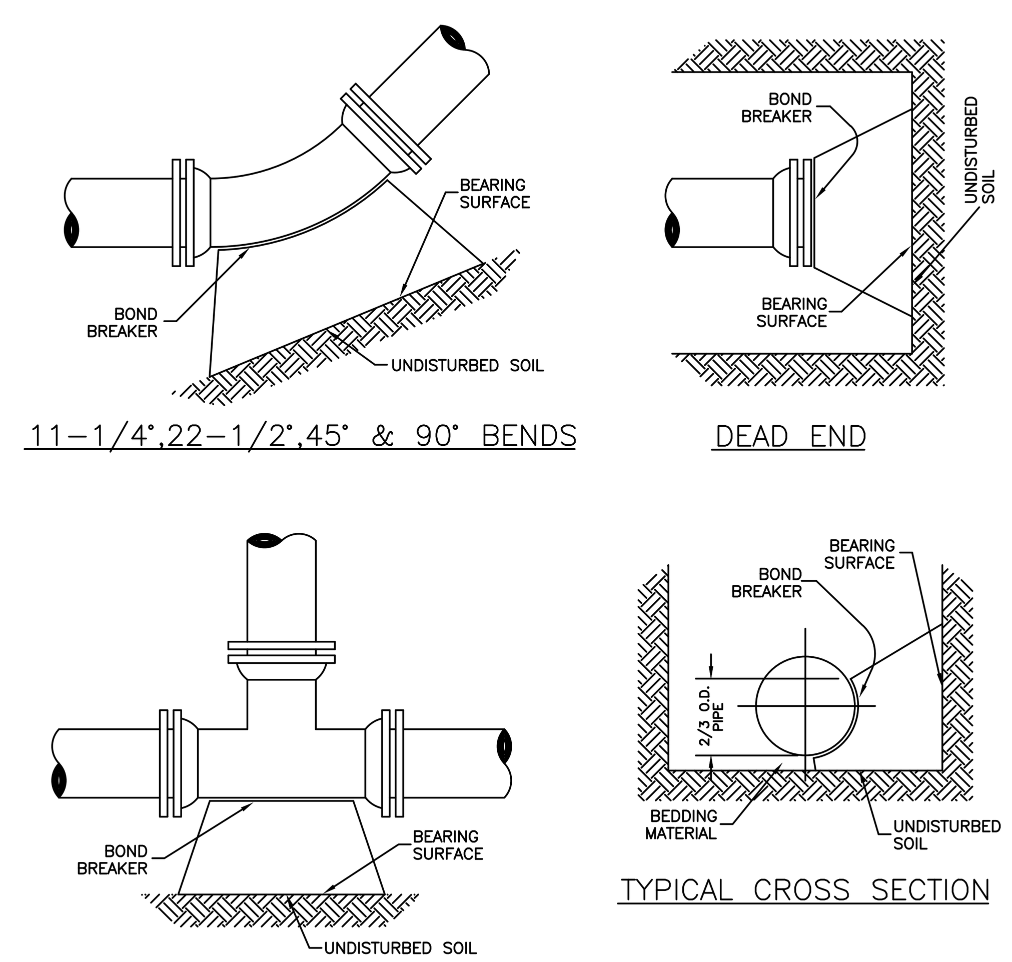

MINIMUM BEARING SURFACE AREA
(IN SQUARE FEET)

SIZE OF PIPE	BENDS 11-1/4°	BENDS 22-1/2°	BENDS 45°	BENDS 90°	TEE OR DEAD END
4"	1.00	1.00	1.00	1.80	1.50
6"	1.00	1.25	2.25	4.00	3.00
8"	1.00	2.00	4.00	7.50	5.25
12"	2.00	4.25	8.25	15.25	11.00
16"	3.50	6.50	12.50	23.00	16.50
20"	5.00	10.00	19.50	35.50	25.00
24"	6.50	13.00	26.00	47.00	33.00

NOTES:

1. ON 16" AND 20" TRANSMISSION MAINS ALL BENDS SHALL BE BOTH RODDED AND KICKBLOCKED.
2. BEARING SURFACES SHOWN IN CHART ARE MINIMUM.
3. BASED ON 150 PSI PIPE PRESSURE PLUS WATER HAMMER:
   4", 6" AND 8" WATER HAMMER = 120 PSI.
   12" WATER HAMMER = 110 PSI
   16", 20" AND 24" WATER HAMMER = 70 PSI.
4. SOIL BEARING CAPACITY = 3,000 LBS./SQ. FT.
5. ALL VALVES, TEES, BENDS AND PLUGS SHALL BE RODDED AND KICKBLOCKED.

STONEGATE VILLAGE METROPOLITAN DISTRICT
CONCRETE KICKBLOCKS
BEARING SURFACES AND INSTALLATION
SCALE: NONE DATE: 4/00
APPROVED: RJG
DISTRICT ENGINEER

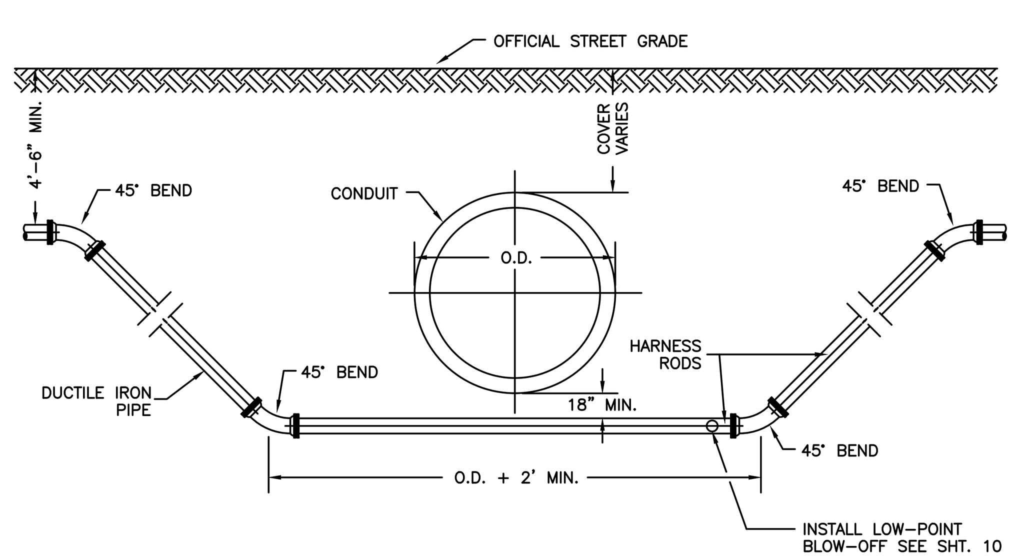

NOTES:

1. LENGTH OF EXTENSION OF PIPE AND HARNESS RODS SHALL BE IN ACCORDANCE WITH THESE ENGINEERING STANDARDS.
2. ALL WATER MAINS TWELVE (12") INCHES OR SMALLER, WHICH CROSS UNDER DISTRICT CONDUITS SHALL BE DUCTILE IRON.
3. A BORED CROSSING MAY BE REQUIRED BY THE ENGINEER.
4. THE WATER LINE SHALL BE INSTALLED BELOW ANY SEWER UNDERDRAINS.

STONEGATE VILLAGE METROPOLITAN DISTRICT
CONDUIT OR STORM
SEWER CROSSING
SCALE: NONE DATE: 4/00
APPROVED: RJG
DISTRICT ENGINEER

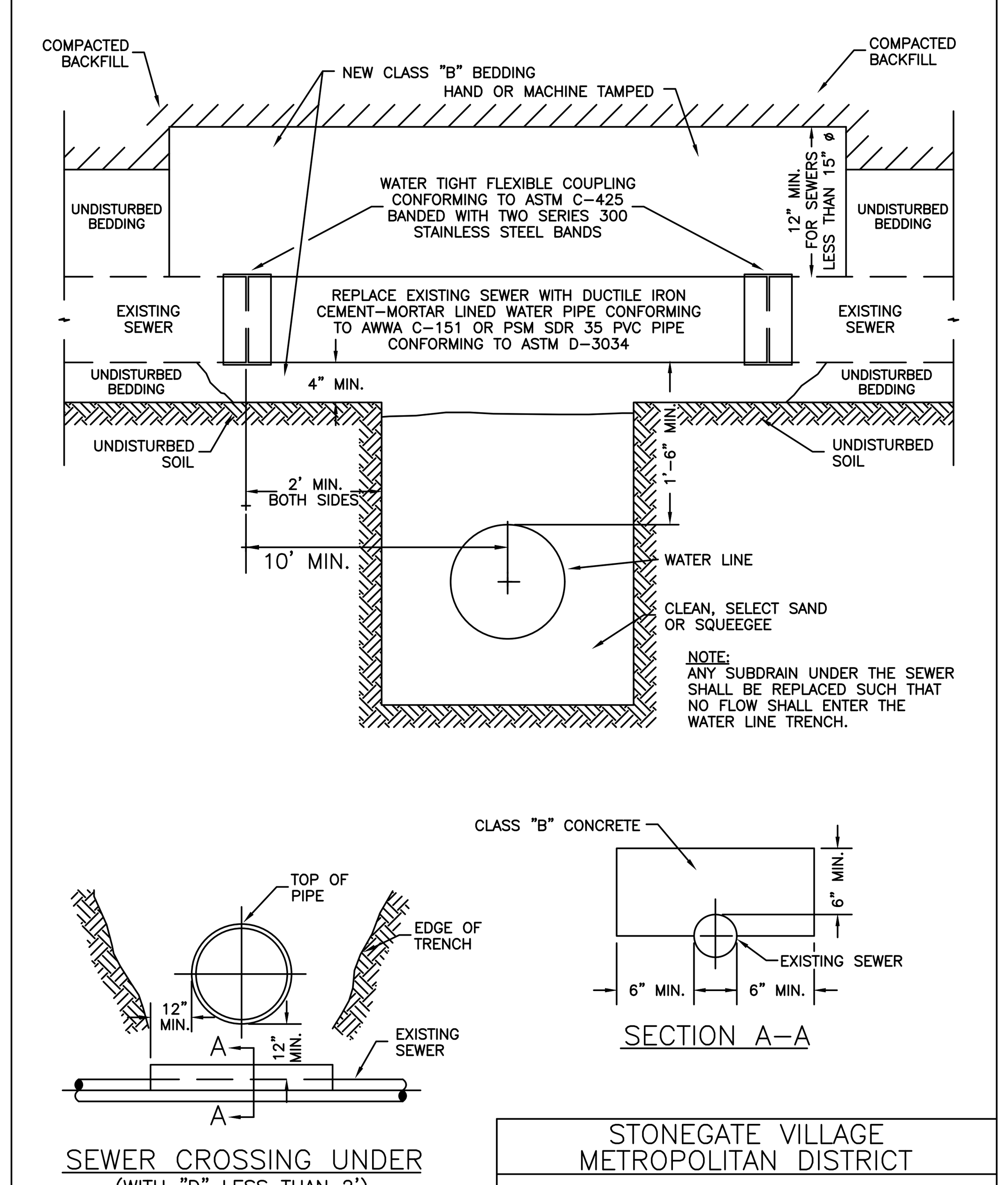

STONEGATE VILLAGE METROPOLITAN DISTRICT
CROSSING
STORM & SANITARY SEWERS
SCALE: NONE DATE: 4/00
APPROVED: RJG
DISTRICT ENGINEER

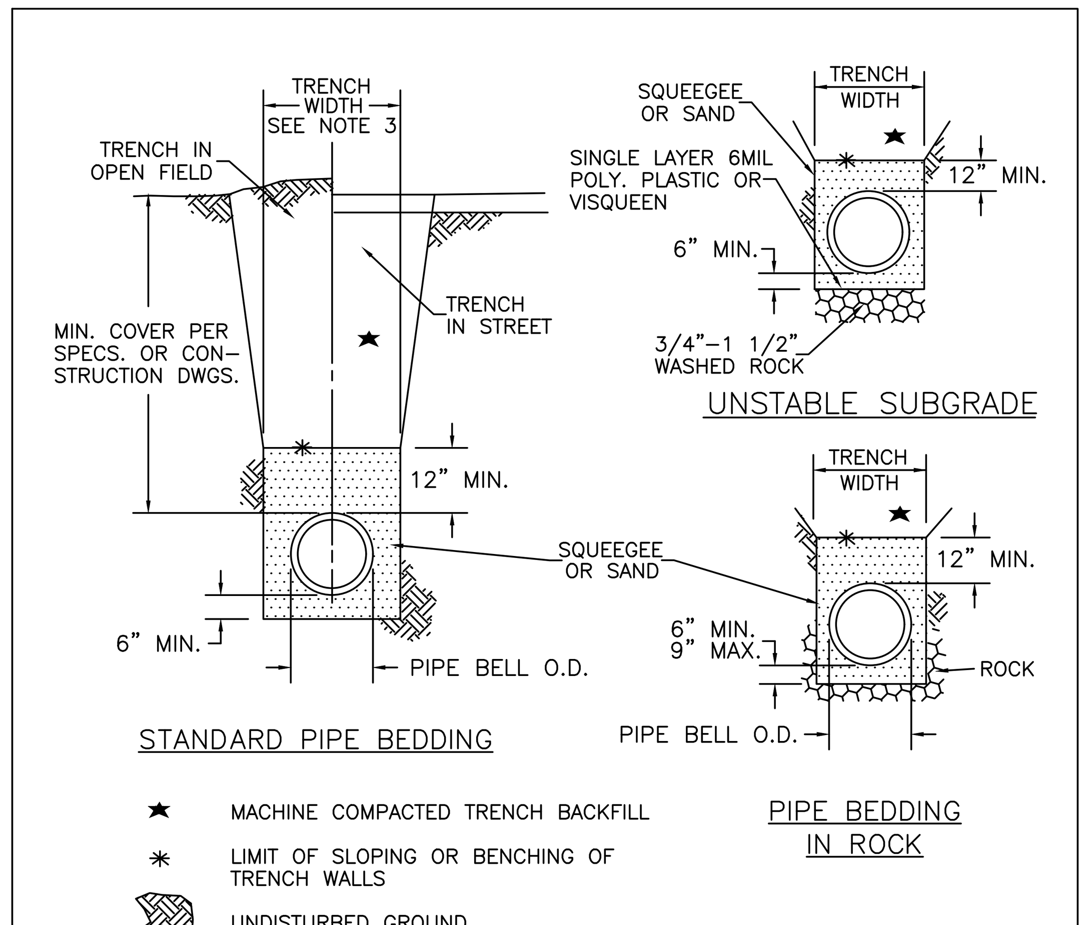

★ MACHINE COMPACTED TRENCH BACKFILL
✳ LIMIT OF SLOPING OR BENCHING OF TRENCH WALLS
UNDISTURBED GROUND

NOTES:

1. MIN. COVER TO BE BELOW FINAL STREET GRADE WHEN AVAILABLE.
2. TRENCH TO BE BRACED OR SHEETED AS NECESSARY FOR THE PROTECTION OF OTHER UTILITIES AND TO MEET OSHA SAFETY REQUIREMENT.
3. TRENCH WIDTH SHALL NOT BE MORE THAN 16" NOR LESS THAN 12" WIDER THAN THE LARGEST OUTSIDE DIAMETER OF THE PIPE LAID THEREIN (BELL OR COUPLING O.D. IF APPLICABLE).

STONEGATE VILLAGE METROPOLITAN DISTRICT
BEDDING DETAILS
SCALE: NONE DATE: 4/00
APPROVED: RJG
DISTRICT ENGINEER

DRAWN BY | REVISIONS | DATE

Manhard CONSULTING LTD
7600 East Orchard Road, Suite 150-N, Greenwood Village, CO 80111 ph:303.708.0500 manhard.com
Civil Engineering | Surveying & Geospatial Services | GIS
Water Resource Management | Construction Management

COMPARK VILLAGE SOUTH, FILING NO 1
TOWN OF PARKER, COLORADO
WATER DETAILS

PROJ. MGR.: RIM
PROJ. ASSOC.: GTI
DRAWN BY:
DATE: 7/2019

SHEET 9 OF 9

PENDING APPROVAL - NOT FOR CONSTRUCTION

© 2018 MANHARD CONSULTING, LTD. ALL RIGHTS RESERVED

Plotted: 9/18/2019 4:49 PM Dwg Name: P:\Ctgokc3\ComSouth04-Master San & Water\dwg\Eng\Final Drawings\Plan Set\Offsite\C\CPKC3 Waterline Bore\Construction Plans\WATER DETAILS.dwg Updated By: SGroth