WATER MAIN CROSSING UNDER E-470 CONSTRUCTION PLANS
FOR
COMPARK VILLAGE SOUTH, FILING NO. 1
PARKER, COLORADO

THE WEST LINE OF THE SOUTHWEST QUARTER OF SECTION 6, TOWNSHIP 6 SOUTH, RANGE 66 WEST OF THE SIXTH PRINCIPAL MERIDIAN BEING MONUMENTED AS SHOWN HEREON HAVING A BEARING OF NORTH 00°29'49" WEST, AS DETERMINED BY GPS OBSERVATION FROM NGS CONTROL POINTS IN THE COLORADO CENTRAL ZONE, STATE PLANE COORDINATE SYSTEM TOWN OF PARKER, COUNTY OF DOUGLAS, STATE OF COLORADO

STONEGATE VILLAGE METRO DISTRICT
WATER AND SANITARY SEWER PLAN

AGENCY CONTACT LIST

470 COMPARK, LLC
MICHAEL VICKERS
290 FILLMORE ST #1A
DENVER, CO 80206 — 303-881-6292

MANHARD CONSULTING
RICK MOORE, P.E.
7600 E ORCHARD ROAD, SUITE 150-N
GREENWOOD VILLAGE, CO 80111 — 303-531-3500

PARKER PUBLIC WORKS
20120 E. MAINSTREET
PARKER, CO. 80138 — 303-840-9546
STREETS - ALEX MESTDAGH
STORM WATER - JACOB JAMES
EROSION CONTROL - KURT PATRICK
LIFE SAFETY - RANDY CAPRA

TOWN OF PARKER POLICE DEPARTMENT
19,600 E. PARKER SQUARE DR.
PARKER, CO. 80134 — 303-841-9800

STONEGATE VILLAGE METRO DISTRICT
DISTRICT ENGINEER:
SCOTT BARNETT
MULHERN MRE, INC.
188 INVERNESS DRIVE WEST, SUITE 150
ENGLEWOOD, CO 80112 — 303-858-9909

DISTRICT MANAGER:
SARAH SJOBAKKEN
10252 STONEGATE PARKWAY
PARKER, CO 80134 — 303-858-9909

SOUTH METRO FIRE RESCUE AUTHORITY
MICHELLE HERIAN
9195 E. MINERAL AVE.
CENTENNIAL, CO 80112 — 720-488-7200

UTILITY NOTIFICATION COMPANY OF COLORADO
2801 SOUTH YOUNGFIELD ST, SUITE 301
GOLDEN, CO 80401 — 1-800-922-1987
LOCAL CALLS — (811)

XCEL ENERGY
MICHELLE O'NAN
5909 E. 38TH AVE.
DENVER, CO 80207 — 303-329-1618
720-490-3867

COMCAST
KEVIN YOUNG
6850 S. TUCSON WAY
ENGLEWOOD, CO 80112

QWEST
WILLIAM BENSON
9750 E. COSTILLA AVE.
ENGLEWOOD, CO 80112 — 303-792-6069

COLORADO DEPARTMENT OF HEALTH
4210 E. 11TH AVE.
DENVER, CO 80220 — 303-320-8333

INTERMOUNTAIN RURAL ELECTRIC ASSOCIATION
BROOKS KAUFMAN
5496 NORTH US HWY 85
P.O. BOX DRAWER A
SEDALIA, CO 80135 — 303-688-3100

SOUTH METRO WATER SUPPLY AUTHORITY
RICHARD MARSICEK
8400 E PRENTICE AVE, SUITE 315
GREENWOOD VILLAGE, CO 80111 — 720-216-5158

E-470 PUBLIC HIGHWAY AUTHORITY
MANAGER OF LAND MANAGEMENT:
MICHELI WATSON
22470 EAST 6TH PARKWAY, SUITE 100
AURORA, CO 80016 — 303-537-3747

BENCHMARKS: (COMPARK SOUTH)

SOURCE BENCHMARKS:
DOUGLAS COUNTY BM 1.115010
A DOUGLAS COUNTY GIS MONUMENT SET IN CONCRETE LOCATED APPROXIMATELY 130 FEET SOUTHWESTERLY OF THE CENTERLINE OF CHAMBERS ROAD AND 95 FEET NORTHWESTERLY OF THE CENTERLINE OF COMPARK BOULEVARD.
ELEVATION = 5752.84 (NAVD 88)

SITE BENCHMARKS:
1. A NO. 5 REBAR WITH 2" ALUMINUM CAP STAMPED "LS 28286, 2001" FOUND AT THE SOUTHEAST CORNER OF SECTION 6, T6S, R66W LOCATED ON THE WEST LINE OF FIRST STREET APPROXIMATELY 1000 FEET NORTH OF ELM AVENUE.
   ELEVATION = 5845.51
2. A 2.5" IRON PIPE WITH 3.25" ALUMINUM CAP STAMPED "PLS 12405, 1997" FOUND AT THE SOUTHEAST CORNER OF SECTION 6, T6S, R66W LOCATED APPROXIMATELY 960 FEET NORTH OF THE CENTERLINE OF AVENTERRA PARKWAY AND APPROXIMATELY 1050 FEET WEST OF THE CENTERLINE OF CHAMBERS ROAD.
   ELEVATION = 5808.06

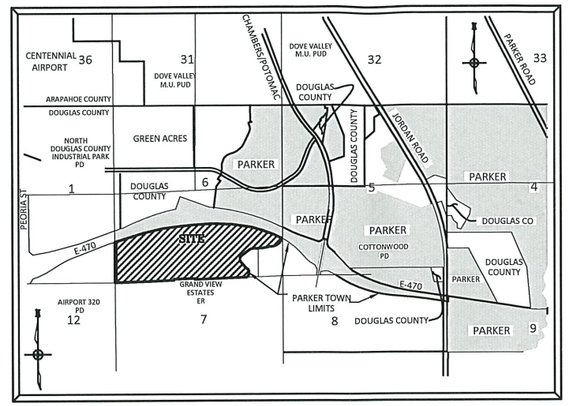

VICINITY MAP
N.T.S.

WATER MAIN QUANTITIES

1	8" PVC Water Main	8	L.F.	$37.00
2	12" PVC Water Main	682	L.F.	$48.35
3	12" Gate Valve and Box	2	Each	$2,546.92
4	12" Plug w/ BO	3	Each	$1,730.33
5	12" x 12" Tee w/ KB	2	Each	$1,330.36
6	12"x 8" Reducer	1	Each	$600.00
7	12" 45 Degree Bend	1	Each	$695.50
8	12" 11.25 Degree Bend	1	Each	$695.50
9	Fire Hydrant Assembly	1	Each	$6,600.51
10	24" Bore/Steel Casing - E-470 Crossing	386	L.F.	$586.00
11	Connection to Existing Water Line	2	Each	$10,678.22

I HEREBY AFFIRM THAT THESE CONSTRUCTION PLANS WERE PREPARED BY ME OR UNDER MY DIRECT SUPERVISION.

FOR AND ON BEHALF OF MANHARD CONSULTING

Know what's **below.**
Call before you dig.

DISTRICT APPROVALS

THESE DESIGNS, PLANS, AND CONTRACT DOCUMENTS ARE REVIEWED FOR CONCEPT AND GENERAL CONFORMANCE TO THE DISTRICT'S MINIMUM STANDARDS ONLY, AND THE PRIMARY RESPONSIBILITY FOR DESIGN ADEQUACY IS TO REMAIN WITH THE ENGINEER OF RECORD. THIS REVIEW DOES NOT IMPLY RESPONSIBILITY BY EITHER THE STONEGATE VILLAGE METROPOLITAN DISTRICT OR THE DISTRICT ENGINEER FOR COMPLETENESS, ACCURACY OR CORRECTNESS OF CALCULATIONS. THE REVIEW DOES NOT IMPLY THAT QUANTITIES OF ITEMS INDICATED ON THE PLANS ARE THE FINAL QUANTITIES REQUIRED. THE REVIEW SHALL NOT BE CONSTRUED FOR ANY REASON AS ACCEPTANCE OF FINANCIAL RESPONSIBILITY BY THE STONEGATE VILLAGE METROPOLITAN DISTRICT FOR ADDITIONAL ITEMS AND ADDITIONAL QUANTITIES OF ITEMS SHOWN THAT MAY BE REQUIRED DURING THE CONSTRUCTION PHASE.

APPROVED FOR CONSTRUCTION WITHIN ONE YEAR OF THE EARLIEST OF THESE DATES:

BY Scott A Barnett — 4/3/2020
STONEGATE VILLAGE METROPOLITAN DISTRICT ENGINEER — DATE

BY — 4/3/2020
STONEGATE VILLAGE METROPOLITAN DISTRICT MANAGER — DATE

DATE	REVISIONS	DRAWN BY
04-03-2020	Final Submittal for Construction	ASD
10-15-2020	Removal/update details	SEK
12-29-2020	Change Bore/Steel Sleeve to 12".	SEK

Manhard CONSULTING LTD
7600 East Orchard Road, Suite 150-N, Greenwood Village, CO 80111 ph:303.708.0500 manhard.com
Civil Engineering | Surveying & Geospatial Services | GIS
Water Resource Management | Construction Management

COMPARK VILLAGE SOUTH, FILING NO 1
TOWN OF PARKER, COLORADO
COVER SHEET

COLORADO REGISTERED PROFESSIONAL ENGINEER — SCOTT T. BARNETT — 37642 — 04-03-2020

PROJ. MGR.: GH
PROJ. ASSOC.: ----
DRAWN BY: SEK
DATE: 01-13-2020

SHEET 1 OF 7

© 2018 MANHARD CONSULTING, LTD. ALL RIGHTS RESERVED

Plotted: 4/3/2020 9:43 AM Dwg Name: P:\Projects\ComParkSouth\04-Master Site & Water\Dwg\Eng\Final Drawings\Plan Set\Offsite\CLCPK3 Waterline Bore\Construction Plans\COVER.dwg Updated By: ADrucker

GENERAL NOTES:

1. ALL CONSTRUCTION SHALL COMPLY WITH STONEGATE VILLAGE METROPOLITAN DISTRICT SPECIFICATIONS.
2. THE CONTRACTOR SHALL CONTACT ALL APPROPRIATE UTILITY COMPANIES, THE TOWN OF PARKER , DOUGLAS COUNTY, AND THE DISTRICT ENGINEER PRIOR TO THE BEGINNING OF ANY CONSTRUCTION. CONTRACTOR SHALL BE RESPONSIBLE FOR LOCATING ANY EXISTING UTILITY (INCLUDING DEPTHS) WHICH MAY CONFLICT WITH THE PROPOSED CONSTRUCTION. ALL EXISTING UTILITIES SHALL BE PROTECTED FROM DAMAGE BY THE CONTRACTOR. DAMAGED UTILITIES SHALL BE REPAIRED BY THE CONTRACTOR AT HIS/HER OWN EXPENSE.

   ALL ITEMS SHOWN ON THE PLANS AS EXISTING ARE SHOWN IN APPROXIMATE LOCATIONS ONLY. THE ACTUAL LOCATIONS MAY VARY FROM THE PLANS, ESPECIALLY IN THE CASE OF UNDERGROUND UTILITIES. WHENEVER CONTRACTOR DISCOVERS A DISCREPANCY IN LOCATIONS, HE/SHE SHALL CONTACT THE ENGINEER IMMEDIATELY.
3. THE DISTRICT ENGINEER AND OTHER APPROVING AGENCIES ARE TO BE NOTIFIED AT LEAST 48-HOURS PRIOR TO CONSTRUCTION.
4. THE CONTRACTOR SHALL OBTAIN, AT HIS/HER EXPENSE, ALL PERMITS WHICH ARE NECESSARY TO PERFORM THE PROPOSED WORK.
5. ALL CONCRETE SHALL BE A MINIMUM OF CLASS A, 6 SACK, TYPE II, 3,000-POUND COMPRESSION STRENGTH.
6. THE DESIGN ENGINEER SHALL SUBMIT ONE SET OF ROLLED "AS-BUILT" BLUELINE PRINTS AND ELECTRONIC FILES TO THE DISTRICT ENGINEER FOR APPROVAL PRIOR TO PRINTING MYLAR SEPIAS FOR THE DISTRICT. AFTER APPROVAL HAS BEEN GRANTED BY THE DISTRICT ENGINEER, FULL SIZE MYLAR SEPIA PRINTS SHALL BE TRANSMITTED TO THE STONEGATE VILLAGE METROPOLITAN DISTRICT OFFICE AND AN ADDITIONAL SET OF ROLLED BLUELINE PRINTS SHALL BE TRANSMITTED TO THE DISTRICT ENGINEER'S OFFICE PRIOR TO PROBATIONARY ACCEPTANCE.
7. ALL BACKFILL MATERIAL SHALL BE COMPACTED TO 95% STANDARD PROCTOR DENSITY. COMPACTION TESTS MUST BE SUBMITTED TO DISTRICT ENGINEER PRIOR TO PROBATIONARY ACCEPTANCE.
8. TRENCHES SHALL BE EXCAVATED AND THE PIPE EXPOSED FOR THE INSPECTION AT ANY LOCATION ON THE PROJECT IF SO ORDERED BY THE INSPECTOR.
9. THE CONTRACTOR WILL BE HELD RESPONSIBLE FOR THE PROPER FUNCTIONING OF LINES (WATER AND SEWER) FOR UP TO 1-YEAR FROM THE DATE OF PROBATIONARY ACCEPTANCE OF THE LINES BY THE DISTRICT. ANY MALFUNCTION DURING THIS PERIOD OF GUARANTEE SHALL BE REMEDIED BY THE CONTRACTOR TO THE SATISFACTION OF THE DISTRICT ENGINEER AT NO EXPENSE TO THE DISTRICT.
10. SURFACE GRADES ARE TO BE WITHIN PLUS OR MINUS 1-FOOT OF FINISHED GRADE AND VERIFICATION OF COMPACTION RESULTS OBTAINED PRIOR TO THE INSTALLATION OF WATER AND SEWER LINES. RESULTS MUST BE SUBMITTED TO THE DISTRICT ENGINEER.
11. NO WORK SHALL BE BACKFILLED UNTIL THE CONSTRUCTION HAS BEEN INSPECTED AND APPROVED FOR BACKFILLING BY THE DISTRICT ENGINEER OR REPRESENTATIVE OF THE DISTRICT ENGINEER.
12. GRADING IS REQUIRED TO BE ADVANCED TO AT LEAST SUBGRADE LEVEL PRIOR TO UTILITY INSTALLATION. SURVEYOR CONFIRMATION IS REQUIRED.

WATER MAIN NOTES

1. ALL MATERIALS AND WORKMANSHIP SHALL BE IN CONFORMANCE WITH THE STONEGATE VILLAGE METROPOLITAN DISTRICT ENGINEERING STANDARDS AND SPECIFICATIONS, LATEST REVISION. ALL WORK SHALL BE INSPECTED AND APPROVED BY PERSONNEL OF THE STONEGATE VILLAGE METROPOLITAN DISTRICT AND THE DISTRICT ENGINEER.
2. ALL WATER MAINS SHALL BE CLASS 50 DUCTILE IRON PIPE (AWWA C-151-71) OR PVC 6-INCH THROUGH 12-INCH C-900 CLASS 200. ALL JOINTS AND FITTINGS SHALL BE IN ACCORDANCE WITH THE STONEGATE VILLAGE METROPOLITAN DISTRICT STANDARDS AND SPECIFICATIONS. WATER MAINS 20-INCH AND LARGER SHALL BE CLASS 51. ANY VARIATION OF THIS STANDARD SHALL BE NOTED ON THE PLANS. ALL D.I. PIPE FITTINGS SHALL BE POLYETHYLENE WRAPPED.
3. ALL BENDS, PLUGS, REDUCERS, AND FIRE HYDRANTS ARE TO BE RODDED. ALL FITTINGS SHALL BE WRAPPED WITH 8-MIL MINIMUM THICKNESS POLYETHYLENE MATERIAL PER AWWA STANDARD C-105.
4. ALL WATER VALVES SHALL BE OPEN RIGHT.
5. THERE SHALL BE A MINIMUM COVER OF 4-1/2-FEET OVER ALL WATER MAINS.
6. FIRE HYDRANTS SHALL CONFORM TO AWWA C-502 "DRY BARREL FIRE HYDRANTS" PIPE. HYDRANT ASSEMBLIES SHALL INCLUDE ALL PIPE, FITTINGS, VALVES, MATERIALS, AND LABOR NECESSARY TO INSTALL THE HYDRANT COMPLETE IN PLACE. ACCEPTABLE MODELS ARE MUELLER CENTURION MODEL 423 OR WATEROUS COMPANY PACER WB-67 MODEL WITH BRONZE BUSED SHOW AND BRONZE SHAFT COUPLING, THE 4-1/2-INCH NOZZLE TO HAVE N.S.T. THREADS.
7. ALL BENDS, TEES, FIRE HYDRANTS, BLOW-OFFS AND PLUGS AT DEAD-END MAINS SHALL BE PROTECTED FROM THRUST BY USING CONCRETE THRUST BLOCKS.
8. CHLORINATION AND FLUSHING: ALL WATER MAINS SHALL BE INSTALLED AND CHLORINATED PER STONEGATE VILLAGE METROPOLITAN DISTRICT STANDARDS AND SPECIFICATIONS. THE LINES SHALL BE CHLORINATED IN ACCORDANCE WITH AWWA C-601, "DISINFECTING WATER MAINS." THE PREFERRED METHOD IS TO USE SUFFICIENT CHLORINE TABLETS TO PRODUCE A 50-MG TO 1 SOLUTION. THESE TABLETS SHOULD BE ADHERED TO THE TOP OF THE PIPE SECTION WITH PERMATEX NO.1 (RED). THE CHLORINATION OF ANY FINISHED PIPELINE SHALL BE DONE PRIOR TO THE HYDROSTATIC TESTING. STERILIZATION AND FLUSHING OF ALL MAINS SHALL BE INSPECTED COPY OF THE CERTIFIED BY HEALTH DEPARTMENT HAVING JURISDICTION. ONE COPY OF THE CERTIFICATION SHALL STATE THE LOCATION OF THE MAIN, THAT THE MAIN HAS BEEN INSPECTED BY A REPRESENTATION OF THE HEALTH DEPARTMENT HAVING JURISDICTION, AND WAS FOUND TO COMPLY WITH THE PROCEDURES SET FORTH BY THAT DEPARTMENT.

8\. HYDROSTATIC TESTING: ALL WATER MAINS SHALL BE TESTED PER THE REQUIREMENTS OF THE STONEGATE VILLAGE METROPOLITAN DISTRICT STANDARDS AND SPECIFICATIONS. ALL PIPE SHALL BE FIELD PRESSURE-TESTED TO A MINIMUM OF 150 PSI. ALL TESTING SHALL BE DONE IN THE PRESENCE OF A STONEGATE VILLAGE METROPOLITAN DISTRICT INSPECTOR. LEAKAGE FOR EACH SECTION OF PIPE BETWEEN LINES VALVES SHALL NOT EXCEED THE LIMITS SET FORTH IN THE STONEGATE VILLAGE METROPOLITAN DISTRICT STANDARDS AND SPECIFICATIONS.

9. VALVES IN STREETS ARE TO BE LOCATED AT PROPERTY LINE EXTENSIONS EXCEPT FOR TAPPING TEES, WHERE AN ADDITIONAL VALVE SHALL BE PLACED ON THE TAPPING TEE. OTHER VALVE LOCATIONS, SUCH AS WHERE CROSS-PANS EXIST, ARE SHOWN ON THE PLANS.
10. WHEN NECESSARY TO LOWER OR RAISE WATER LINES AT STORM DRAINS AND OTHER UTILITY CROSSINGS, A MINIMUM CLEARANCE OF 1-1/2-FEET SHALL BE MAINTAINED BETWEEN OUTSIDE OF PIPES.
11. THE CONTRACTOR SHALL HAVE IN HIS/HER POSSESSION AT ALL TIMES ONE SIGNED COPY OF THE PLANS WHICH HAVE BEEN APPROVED BY THE STONEGATE VILLAGE METROPOLITAN DISTRICT AND THE DISTRICT ENGINEER.
12. THE CONTRACTOR SHALL NOTIFY THE STONEGATE VILLAGE METROPOLITAN DISTRICT AND THE DISTRICT ENGINEER AT LEAST 48-HOURS PRIOR TO ANY CONSTRUCTION. IF WORK IS SUSPENDED FOR ANY PERIOD OF TIME AFTER INITIAL START-UP, THE CONTRACTOR MUST NOTIFY THE DISTRICT ENGINEER 48-HOURS PRIOR TO RE-START.
13. PIPE BEDDING SHALL BE A CLEAN, WELL-GRADED SAND OR SQUEEGEE SAND IN ACCORDANCE WITH STONEGATE VILLAGE METROPOLITAN DISTRICT STANDARDS AND SPECIFICATIONS, LATEST REVISION.
14. THE CONTRACTOR SHALL NOTIFY THE PUBLIC UTILITY COMPANIES AND DETERMINE THE LOCATION OF ALL EXISTING UNDERGROUND UTILITIES PRIOR TO PROCEEDING WITH THE EXCAVATION. ALL WORK PERFORMED IN THE AREA OF THE PUBLIC UTILITIES SHALL BE PERFORMED ACCORDING TO THE REQUIREMENTS OF THESE AGENCIES.
15. COMPACTION OF ALL TRENCHES MUST BE ATTAINED IN ACCORDANCE WITH THE SOILS REPORTS AND COMPACTION TEST RESULTS SUBMITTED TO THE DISTRICT ENGINEER PRIOR TO PROBATIONARY ACCEPTANCE.
16. VALVE BOXES: TYLER SCREW-TYPE 6-INCH CAST-IRON VALVE BOX ASSEMBLY SERIES 6860 WITH NO. 1560 OVAL BASE. CLAY AND BAILEY SCREW-TYPE 6 INCH CAST-IRON VALVE BOX ASSEMBLY NO. P-108 WITH NO. 106 LARGE OVAL BASE.
17. ALL PIPE LENGTHS ARE APPROXIMATE.
18. AT LEAST 5-DAYS PRIOR TO THE START OF CONSTRUCTION, A PRE-CONSTRUCTION MEETING WILL BE HELD AT THE OFFICE OF THE DISTRICT ENGINEER AND ATTENDED BY THE CONTRACTOR AND REPRESENTATIVE OF OTHER APPROVING AGENCIES. IT WILL BE THE RESPONSIBILITY OF THE CONTRACTOR TO CONTACT THE DISTRICT ENGINEER.

SANITARY SEWER NOTES

1. ALL SANITARY SEWER CONSTRUCTION SHALL CONFORM TO THE STONEGATE VILLAGE METROPOLITAN DISTRICT STANDARDS AND SPECIFICATIONS.
2. ALL SEWER MAINS SHALL BE PVC, ASTM D-3034, SDR 35 OR APPROVED EQUAL. ALL SEWER MAIN SIZE IS 8-INCH IN DIAMETER UNLESS OTHERWISE NOTED.
3. SEWER LINES SHALL BE INSTALLED 5-FEET SOUTH OR WEST OF STREET CENTERLINE, UNLESS OTHERWISE SHOWN ON PLANS. SEWER LINES SHALL BE 10-FEET FROM WATER LINES EXCEPT WHEN CROSSING EACH OTHER. SEWER LINES WHICH CROSS LESS THAN 1-1/2-FEET VERTICALLY FROM THE WATER MAIN SHALL BE ENCASED IN CONCRETE AS PER STONEGATE VILLAGE METROPOLITAN DISTRICT STANDARDS AND SPECIFICATIONS. USE RUBBER GASKETS FOR PVC ENCASEMENT.
4. SEWER RIM ELEVATIONS SHOWN ARE APPROPRIATE ONLY AND ARE NOT TO BE TAKEN AS FINAL ELEVATIONS. RING AND COVER SHALL BE SET IN CENTERED CONCRETE RINGS WITH RAM-NECK FOR ADJUSTMENT TO MATCH FINAL PAVEMENT ELEVATIONS.
5. THE CONTRACTOR AND SURVEY CREW SHALL VERIFY ELEVATIONS OF EXISTING SEWER LINES AND MANHOLES TO BE TIED TO PRIOR TO CONSTRUCTION OR STAKING OF SANITARY SEWER.
6. SEWER WYES SHALL BE USED RATHER THAN TEES. SEWER SERVICE WYES FOR EACH UNIT SHALL BE STAKED BY A SURVEY CREW, AND FURNISHED AND INSTALLED BY THE CONTRACTOR. THE CONTRACTOR SHALL FURNISH TO THE ENGINEER "AS BUILT" LOCATION OF WYES.
7. ALL MANHOLES SHALL BE 48-INCHES IN DIAMETER WITH 24-INCH RING AND COVER, ECCENTRIC CONE, UNLESS OTHERWISE SPECIFIED.
8. PIPE BEDDING SHALL BE CLASS "B" AND SHALL CONFORM TO ASTM C-33 OR D-448 GRADATION NO. 6 OR NO. 67.
9. AT LEAST 5-DAYS PRIOR TO THE START OF CONSTRUCTION, A PRE-CONSTRUCTION MEETING WILL BE HELD AT THE OFFICE OF THE DISTRICT ENGINEER AND ATTENDED BY THE CONTRACTOR AND REPRESENTATIVES OF THE OTHER APPROVING AGENCIES. IT WILL BE THE RESPONSIBILITY OF THE CONTRACTOR TO CONTACT THE DISTRICT ENGINEER TO SCHEDULE THIS MEETING.
10. ALL PIPE LENGTHS ARE APPROXIMATE.
11. THE CONTRACTOR SHALL HAVE IN HIS/HER POSSESSION AT ALL TIMES ONE SIGNED COPY OF THE PLANS WHICH HAVE BEEN APPROVED BY THE STONEGATE VILLAGE METROPOLITAN DISTRICT AND THE DISTRICT ENGINEER.
12. ALL MANHOLES SHALL HAVE SHAPED INVERTS.
13. ALL SEWER LINES SHALL BE TESTED IN ACCORDANCE WITH THE STONEGATE VILLAGE METROPOLITAN DISTRICT STANDARDS AND SPECIFICATIONS PRIOR TO ACCEPTANCE OR ANY CONNECTION TO AN EXISTING SEWER LINE.
14. PRIOR TO START WORK WHERE SEWER MAIN IS TO BE INSTALLED INTO EXISTING DISTRICT SEWER SYSTEMS, THE NEAREST MANHOLE TO THE POINT OF TIE-IN SHALL BE PLUGGED WITH A PLUMBER'S PLUG ON THE INLET SIDE BY THE CONTRACTOR. THIS PLUG SHALL REMAIN IN PLACE UNTIL FINAL ACCEPTANCE BY THE DISTRICT. ITS PURPOSE SHALL BE TO PREVENT ANY MUD, WATER OR OTHER MATERIALS FROM ENTERING THE LINE DURING CONSTRUCTION. THE CONTRACTOR SHALL BE RESPONSIBLE FOR PUMPING AND CLEANING THESE MANHOLES AND REMOVING THE PLUG WHEN SO INSTRUCTED BY THE DISTRICT.
15. PRIOR TO PROBATIONARY ACCEPTANCE WALK-THROUGH, THE CONTRACTOR/DEVELOPER SHALL JET CLEAN THE ENTIRE SANITARY SEWER SYSTEM AND PUMPOUT AT THE PLUGGED MANHOLE.
16. ALL SERVICES WILL BE PERMANENTLY MARKED ON CURB FACE AS FOLLOWS:

    "X" FOR SANITARY SEWER SERVICES

    "V" FOR WATER SERVICES
17. ALL WAREHOUSE BUILDING COMPANIES WITH AN SIC CODE SHALL FILL OUT AN INDUSTRIAL WASTE AND SILVER MERCURY WASTE DISCHARGE QUESTIONNAIRE PRIOR TO DISTRICT APPROVAL.

DISTRICT ACCEPTANCE NOTE:

1. UPON COMPLETION OF SANITARY SEWER AND WATER CONSTRUCTION AND TESTING, THE DEVELOPER OR CONTRACTOR SHALL CONTACT THE DISTRICT FOR PROBATIONARY ACCEPTANCE INSPECTION. A PUNCHLIST WILL BE PROVIDED THE DEVELOPER AND CONTRACTOR UPON COMPLETION OF THE INITIAL WALK-THROUGH AND PROBATIONARY ACCEPTANCE WILL BE ISSUED FOLLOWING COMPLETION AND ACCEPTANCE OF THE WORK OUTLINED IN THE PUNCHLIST.
2. THE CONTRACTOR WILL BE HELD RESPONSIBLE FOR THE PROPER FUNCTIONING OF THE LINES FOR UP TO 1-YEAR FROM THE DATE OF PROBATIONARY ACCEPTANCE OF THE LINES BY THE DISTRICT. ANY MALFUNCTION DURING THIS PERIOD OF GUARANTEE SHALL BE REMEDIED BY THE CONTRACTOR TO THE SATISFACTION OF THE DISTRICT ENGINEER AT NO EXPENSE TO THE DISTRICT.
3. THE DATE OF FINAL ACCEPTANCE WILL BE INDICATED IN THE CONDITIONS OF THE PROBATIONARY ACCEPTANCE LETTER. THE DEVELOPER SHALL BE RESPONSIBLE FOR CONTACTING THE DISTRICT FOR FINAL INSPECTION AND FINAL ACCEPTANCE.

MASTER LEGEND

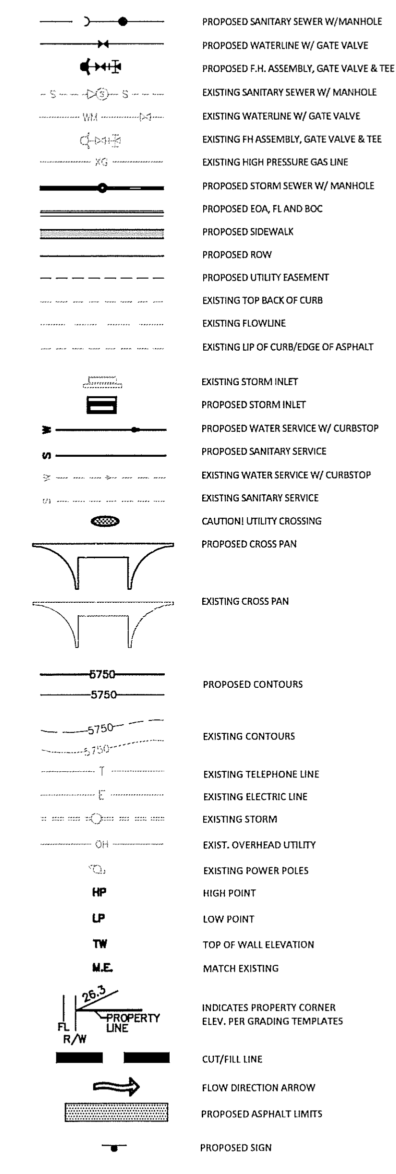

	DATE	REVISIONS	DRAWN BY
3	04-03-2020	Final Submittal for Construction	ASD
2	01-13-2020	Remove/update details.	SEK
1	10-29-2019	Changed pipe sizing from 8" to 12".	SEK

Manhard CONSULTING LTD
7600 East Orchard Road, Suite 150-N, Greenwood Village, CO 80111 ph:303.708.0500 manhard.com
Civil Engineering | Surveying & Geospatial Services | GIS
Water Resource Management | Construction Management

COMPARK VILLAGE SOUTH, FILING NO 1
TOWN OF PARKER, COLORADO
GENERAL NOTES

COLORADO REGISTERED PROFESSIONAL ENGINEER GARY T. IWA... 37642 04-03-2020

PROJ. MGR.: GTI
PROJ. ASSOC.: ----
DRAWN BY: SEK
DATE: 01-13-2020

© 2018 MANHARD CONSULTING, LTD. ALL RIGHTS RESERVED

Plotted: 4/3/2020 9:43 AM Dwg Name: P:\Clcpkc3\ComSouth04-Master San & Water\dwg\Eng\Final Drawings\Plan Set\Offsite\CLCPKC3 Waterline Bore\Construction Plans\GENERAL NOTES.dwg Updated By: SKosbab

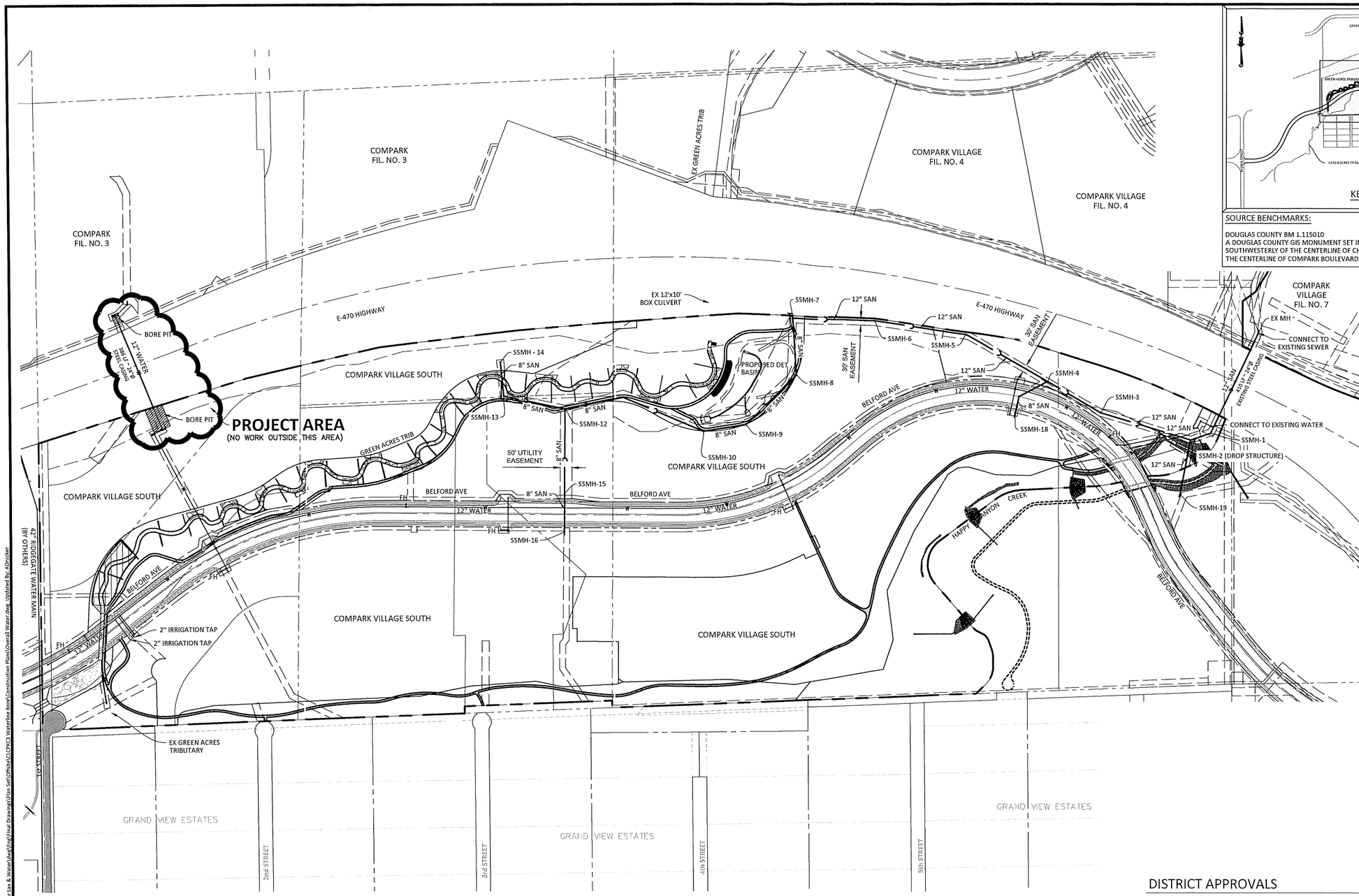

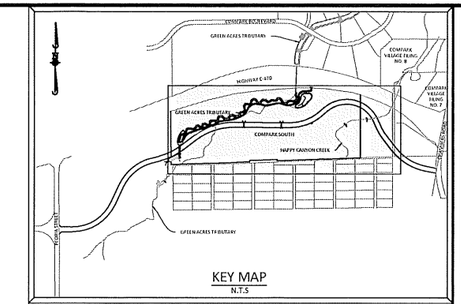

KEY MAP
N.T.S

SOURCE BENCHMARKS:

DOUGLAS COUNTY BM 1.115010
A DOUGLAS COUNTY GIS MONUMENT SET IN CONCRETE LOCATED APPROXIMATELY 130 FEET SOUTHWESTERLY OF THE CENTERLINE OF CHAMBERS ROAD AND 95 FEET NORTHWESTERLY OF THE CENTERLINE OF COMPARK BOULEVARD. ELEVATION = 5752.84 (NAVD 88)

Know what's **below.**
Call before you dig.

DISTRICT APPROVALS

THESE DESIGNS, PLANS, AND CONTRACT DOCUMENTS ARE REVIEWED FOR CONCEPT AND GENERAL CONFORMANCE TO THE DISTRICT'S MINIMUM STANDARDS ONLY, AND THE PRIMARY RESPONSIBILITY FOR DESIGN ADEQUACY IS TO REMAIN WITH THE ENGINEER OF RECORD. THIS REVIEW DOES NOT IMPLY RESPONSIBILITY BY EITHER THE STONEGATE VILLAGE METROPOLITAN DISTRICT OR THE DISTRICT ENGINEER FOR COMPLETENESS, ACCURACY OR CORRECTNESS OF CALCULATIONS. THE REVIEW DOES NOT IMPLY THAT QUANTITIES OF ITEMS INDICATED ON THE PLANS ARE THE FINAL QUANTITIES REQUIRED. THE REVIEW SHALL NOT BE CONSTRUED FOR ANY REASON AS ACCEPTANCE OF FINANCIAL RESPONSIBILITY BY THE STONEGATE VILLAGE METROPOLITAN DISTRICT FOR ADDITIONAL ITEMS AND ADDITIONAL QUANTITIES OF ITEMS SHOWN THAT MAY BE REQUIRED DURING THE CONSTRUCTION PHASE.

APPROVED FOR CONSTRUCTION WITHIN ONE YEAR OF THE EARLIEST OF THESE DATES:

BY _____ _____
STONEGATE VILLAGE METROPOLITAN DISTRICT ENGINEER DATE

BY _____ _____
STONEGATE VILLAGE METROPOLITAN DISTRICT MANAGER DATE

DATE	REVISIONS	DRAWN BY
04-03-2020	Final Submittal for Construction	ASD
01-13-2020	Remove/update details.	SEK
10-29-2019	Changed pipe sizing from 8" to 12".	SEK

Manhard CONSULTING
7600 East Orchard Road, Suite 150 N, Greenwood Village, CO 80111 P: 303.740.9600 manhard.com
Civil Engineering | Surveying & Geospatial Services | GIS
Water Resource Management | Construction Management

COMPARK VILLAGE SOUTH, FILING NO 1

TOWN OF PARKER, COLORADO

OVERALL UTILITY PLAN

COLORADO REGISTERED PROFESSIONAL ENGINEER
SCOTT T. INGLIS
37642
04-03-2020

PROJ. MGR.: SH
PROJ. ASSOC.: ----
DRAWN BY: SEK
DATE: 01-13-2020

SHEET 3 OF 7

© 2020 MANHARD CONSULTING, LTD. ALL RIGHTS RESERVED

Plotted: 4/3/2020 9:55 AM Dwg Name: P:\Cipka5\Constbot\Master-San & Water\dwg\Eng\Final Drawings\Plan Set\Offsite\CTCPK3 Waterline Bore\Construction Plans\Overall Water.dwg Updated By: ASnyder

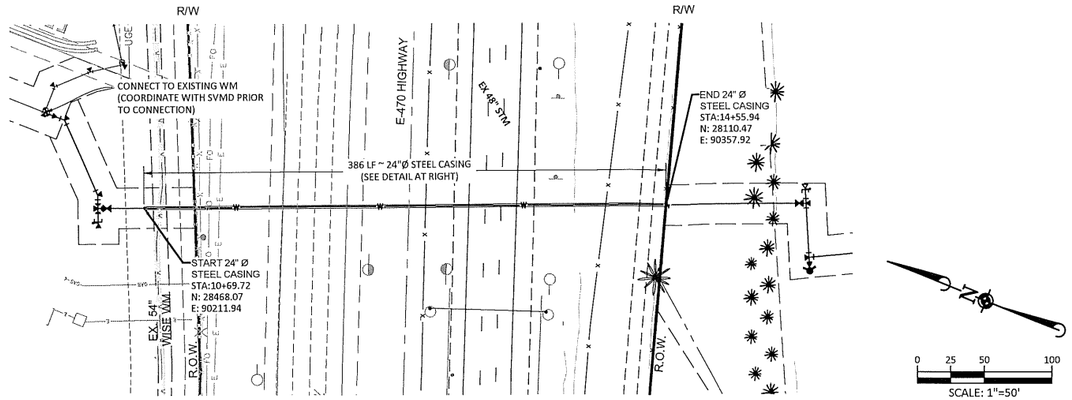

E-470 BORE CROSSING

SCALE 1"=50'

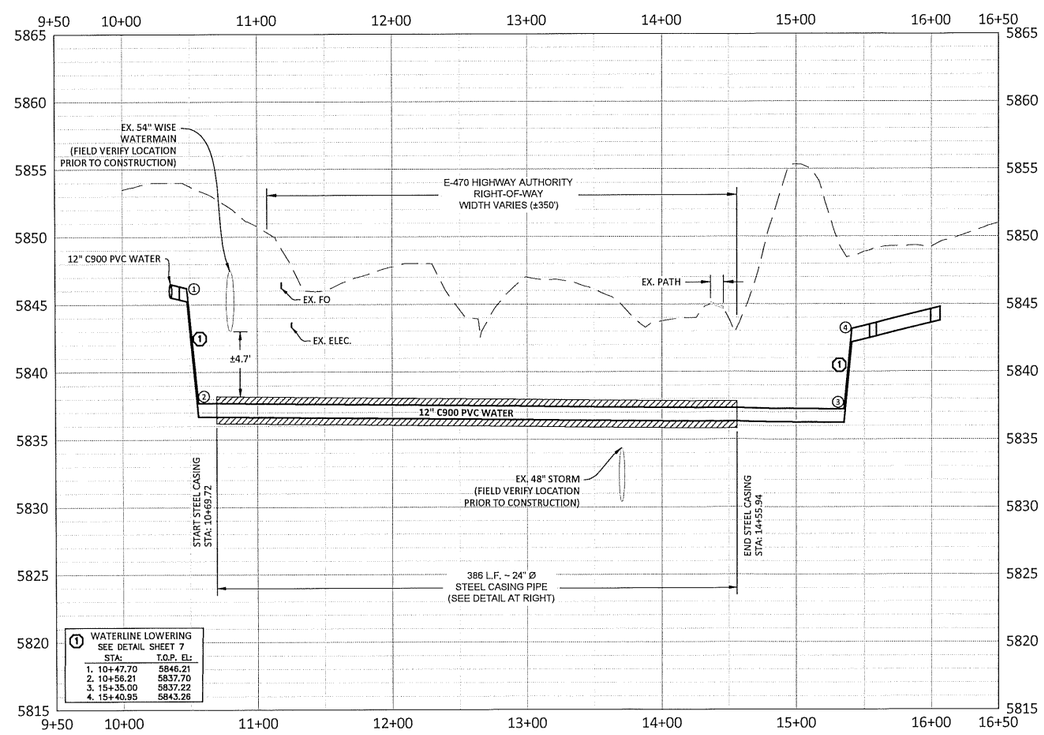

PROFILE: BORE CROSSING

SCALE 1"=50'

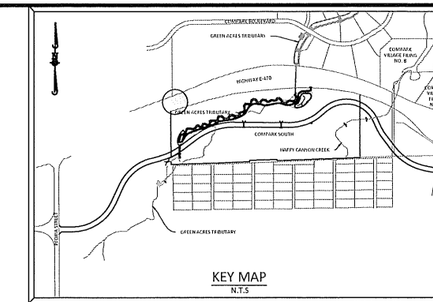

KEY MAP

N.T.S

SOURCE BENCHMARKS:

DOUGLAS COUNTY BM 1.115010
A DOUGLAS COUNTY GIS MONUMENT SET IN CONCRETE LOCATED APPROXIMATELY 130 FEET SOUTHWESTERLY OF THE CENTERLINE OF CHAMBERS ROAD AND 95 FEET NORTHWESTERLY OF THE CENTERLINE OF COMPARK BOULEVARD. ELEVATION = 5752.84 (NAVD 88)

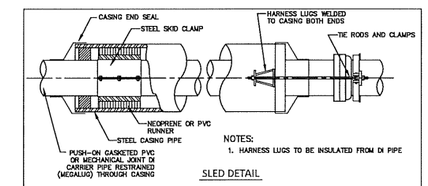

NOTES:
1. HARNESS LUGS TO BE INSULATED FROM DI PIPE

SLED DETAIL

(SEE TABLE BELOW
FOR SIZE AND WALL
THICKNESS)

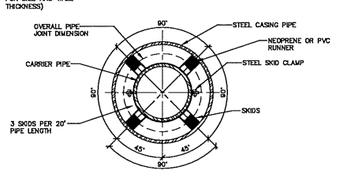

PIPE CASING DETAIL

CARRIER PIPE NOMINAL #	CASING PIPE MIN OD	CASING PIPE MIN WALL THICKNESS
4"	12"	0.188"
6"	15"	0.30"
8"	18"	0.282"
12"	22"	0.344"
16"	28"	0.406"
20"	32"	0.469"

NOTE:
TRENCH LAID CASINGS SHALL BE DESIGNED AND INSTALLED TO CONDUIT STANDARDS.

DATE 03/09 REVISION 2/08 DRAWING NO. CTWD--	STONEGATE VILLAGE METROPOLITAN DISTRICT	RESTRAINED CASING SPACERS DETAIL

CONTRACTOR TO COORDINATE BORINGS WITH JURISDICITIONS PRIOR TO CONSTRUCTION.

CONTRACTOR TO FIELD VERIFY LOCATION/ELEVATION OF ALL EXISTING UTILITIES PRIOR TO CONSTRUCTION. NOTIFY DESIGN ENGINEER OF ANY DISCREPENCIES.

811 Know what's below. Call before you dig.

DATE	REVISIONS	DRAWN BY
04-03-2020	Final Submittal for Construction	ASD
01-13-2020	Remove/update details.	SEK
10-29-2019	Changed pipe sizing from 8" to 12".	SEK

Manhard CONSULTING LTD
7600E Eastcreek Road, Suite 1 | 950 N. Greenwood Village, CO 80111 | P: 303.708.0500 | manhard.com
Civil Engineering | Surveying & Geospatial Services | GIS
Water Resource Management | Construction Management

COMPARK VILLAGE SOUTH, FILING NO 1

TOWN OF PARKER, COLORADO

WATER MAIN BORE - STEEL CASING

COLORADO REGISTERED PROFESSIONAL ENGINEER 37642 04-03-2020

PROJ. MGR.: ----
PROJ. ASSOC.: ----
DRAWN BY: SEK
DATE: 01-13-2020

SHEET 4 OF 7

© 2018 MANHARD CONSULTING, LTD. ALL RIGHTS RESERVED

Plotted: 4/3/2020 10:01 AM Dwg Name: P:\Clients\Stonegate\Comsouth\04-Master San & Water\dwg\Final\Final Drawings\Plan Set\Office\CLCPWCS Waterline Bore\Construction Plans\Water Bore.dwg Updated By: sfocab

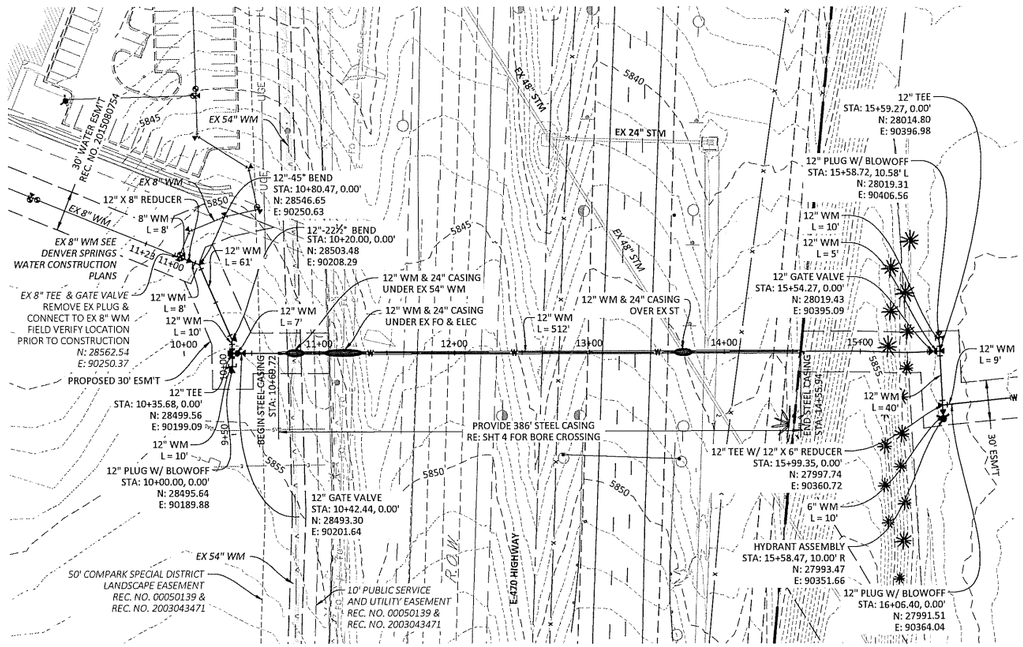

PLAN: 12" WATERLINE

0 25 50 100
SCALE: 1"=50'
VERTICAL SCALE: 1"=5'

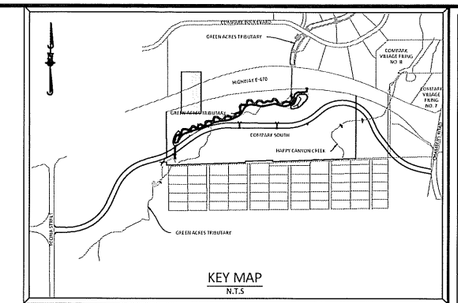

KEY MAP
N.T.S

SOURCE BENCHMARKS:

DOUGLAS COUNTY BM 1.115010
A DOUGLAS COUNTY GIS MONUMENT SET IN CONCRETE LOCATED APPROXIMATELY 130 FEET SOUTHWESTERLY OF THE CENTERLINE OF CHAMBERS ROAD AND 95 FEET NORTHWESTERLY OF THE CENTERLINE OF COMPARK BOULEVARD. ELEVATION = 5752.84 (NAVD 88)

CONTRACTOR TO FIELD VERIFY LOCATIONS/ELEVATIONS OF EXISTING UTILITIES PRIOR TO CONSTRUCTION. NOTIFY DESIGN ENGINEER OF ANY DISCREPANCIES

WATER MAIN SHALL BE CONSTRUCTED USING MANUFACTURER SPECIFICATION AND/OR A MAXIMUM OF 1° DEFLECTION AT THE JOINT, WHICHEVER IS MORE STRICT, AND HIGH DEFLECTION COUPLING WITH A MAXIMUM DEFLECTION OF 3°.

1° DEFLECTION = 1,150' RADIUS 3° DEFLECTION = 385' RADIUS
(ASSUMING 20' SECTION OF PIPE)

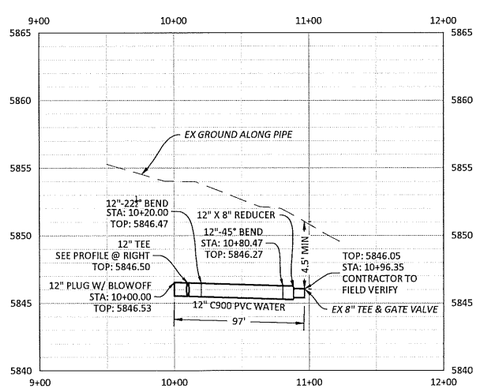

PROFILE: 8" WATERLINE

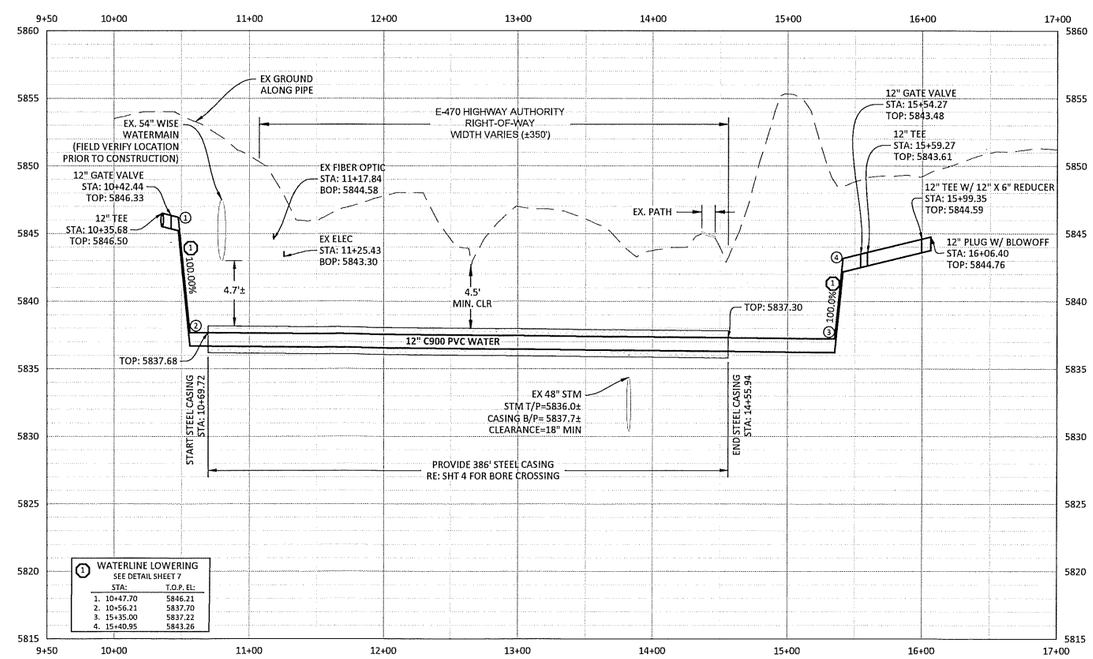

WATERLINE LOWERING
SEE DETAIL SHEET 7

STA:	T.O.P. EL:
1. 10+47.70	5846.21
2. 10+56.21	5837.70
3. 15+35.00	5837.22
4. 15+40.95	5843.26

PROFILE: 12" WATERLINE

811 Know what's below. Call before you dig.

DATE	REVISIONS	DRAWN BY
04-03-2020	Final Submittal for Construction	ASD
03-13-2020	Remove/update details.	SEK
10-29-2019	Changed pipe sizing from 8" to 12".	SEK

Manhard CONSULTING
7600 East Orchard Road, Suite 150-N, Greenwood Village, CO 80111 ph:303.708.0500 manhard.com
Civil Engineering | Surveying & Geospatial Services | GIS
Water Resource Management | Construction Management

COMPARK VILLAGE SOUTH, FILING NO 1
TOWN OF PARKER, COLORADO
WATER MAIN BORE - WATER MAIN

COLORADO REGISTERED PROFESSIONAL ENGINEER ROBERT T. IMA 37642 04-03-2020

PROJ. MGR.: RTI
PROJ. ASSOC.: ---
DRAWN BY: SEK
DATE: 01-13-2020

SHEET 5 OF 7

© 2018 MANHARD CONSULTING, LTD. ALL RIGHTS RESERVED

Printed: 4/3/2020 9:46 AM Dwg Name: P:\Civil3\Construction\04-Master San & Water\dwg\Final\Drawing\Plan Set\Official\CLCWC3 Waterline Bore\Construction Plans\Water Bore2.dwg Updated By: SKolash

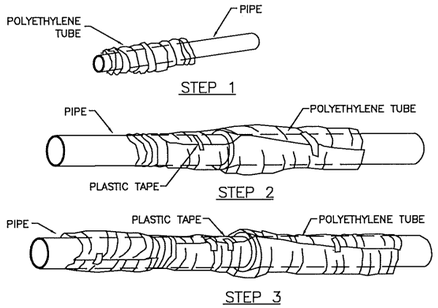

FIELD INSTALLATION – POLYETHYLENE WRAP

STEP 1 – PLACE TUBE OF POLYETHYLENE MATERIAL ON PIPE PRIOR TO LOWERING IT INTO TRENCH.

STEP 2 – PULL THE TUBE OVER THE LENGTH OF THE PIPE. TAPE TUBE TO PIPE AT JOINT. FOLD MATERIAL AROUND THE ADJACENT SPIGOT END AND WRAP WITH TAPE TO HOLD THE PLASTIC TUBE IN PLACE.

STEP 3 – OVERLAP FIRST TUBE WITH ADJACENT TUBE AND SECURE WITH PLASTIC ADHESIVE TAPE. THE POLYETHYLENE TUBE MATERIAL COVERING THE PIPE SHALL BE LOOSE. EXCESS MATERIAL SHALL BE NEATLY DRAWN UP AROUND THE PIPE BARREL, FOLDED ON TOP OF PIPE AND TAPED IN PLACE.

STONEGATE VILLAGE METROPOLITAN DISTRICT	
POLYETHYLENE WRAP	
SCALE: NONE	DATE: 4/00
APPROVED: RJG DISTRICT ENGINEER	

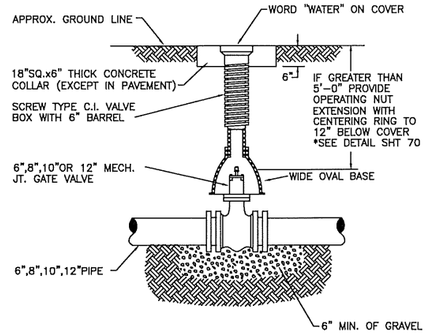

6–INCH VALVE BOXES

Materials:

Valve box parts shall be made from gray cast iron, ASTM A48 Class 20A.

Use of an aluminum alloy as a casting material is not acceptable.

Approved Patterns:

Valve boxes shall be the three–piece adjustable screw type and the following two patterns are acceptable.

1. Tyler screw–type 6–inch cast iron valve box assembly series 6860 with No. 160 oval base.
2. Clay and Bailey screw–type 6–inch cast iron valve box assembly No. P–108 with No. 160 large oval base.

NOTES:
1. VALVE BOXES SHALL BE:
   A. TYLER SCREW–TYPE 6"C.I.ASSY. SERIES 6860 W/NO.160 LARGE OVAL BASE OR
   B. CLAY & BAILEY SCREW–TYPE 6" C.I. ASSY. NO.P–108 W/NO.160 LARGE OVAL BASE.
2. ALL C.I. SHALL BE WRAPPED WITH 8 MIL. MIN. THICKNESS POLYETHYLENE.
3. VALVE NUT SHALL BE CENTERED.
4. VALVE BOX SHALL BE PLUMB.

STONEGATE VILLAGE METROPOLITAN DISTRICT	
VALVE BOX DETAIL	
SCALE: NONE	DATE: 4/00
APPROVED: RJG DISTRICT ENGINEER	

LENGTH OF TIED PIPE

PIPE SIZE	4"				6"				8"				12"				16"				20"				24"			
	D	L	G	D	L	G	D	L	G	D	L	G	D	L	G	D	L	G	D	L	G	D	L	G	D	L	G	D
TEE OR VALVE PLUS 90° BEND	3/4"	6.0'	M.S.	3/4"	13.0'	M.S.	3/4"	20.0'	M.S.	3/4"	20.0'	M.S.	3/4"	40.0'	M.S.	3/4"	40.0'	M.S.	3/4"	80.0'	M.S.	1"	80.0'	A.C.S.	1"	155.0'	A.C.S.	–
45° BEND	3/4"	2.0'	M.S.	3/4"	4.0'	M.S.	3/4"	6.0'	M.S.	3/4"	6.0'	M.S.	3/4"	11.0'	M.S.	1"	18.0'	M.S.	3/4"	24.0'	A.C.S.	–	45.0'	A.C.S.	–	155.0'	A.C.S.	–
22–1/2° BEND	3/4"	1.0'	M.S.	3/4"	1.0'	M.S.	3/4"	2.0'	M.S.	3/4"	3.0'	M.S.	3/4"	5.0'	M.S.	3/4"	5.0'	M.S.	3/4"	6.0'	M.S.	–	12.0'	M.S.	–	3.0'	M.S.	–
11–1/4° BEND	3/4"	0.0'	M.S.	3/4"	0.0'	M.S.	3/4"	1.0'	M.S.	3/4"	1.0'	M.S.	3/4"	1.0'	M.S.	3/4"	1.0'	M.S.	3/4"	2.0'	M.S.	–	–	–	–	–	–	–

NOTES:
1. LENGTH OF TIED PIPE MEASURED EACH WAY FROM VALVES AND BENDS.
2. CLAMPS AND RODS NOT ALLOWED FOR 24" AND LARGER PIPES.
3. D = DIAMETER, L = LENGTH, G = GRADE, M.S. = MILD STEEL, A.C.S. = HIGH STRENGTH
4. MINIMUM 4.5' GROUND COVER REQUIRED.
5. BASED ON 150 PSI INTERNAL PRESSURE.
6. M.S. MEANS MILD STEEL ROD A.S.T.M. STANDARD DESIGNATION A–36.
7. A.C.S. MEANS HIGH STRENGTH ROD A.S.T.M. STANDARD DESIGNATION A–307, GRADE A.
8. NUTS SHALL BE A.S.T.M. STANDARD DESIGNATION A–307 GRADE A OR B HEXAGON "HEAVY" SERIES.
9. SEE TIE ROD DETAIL DRAWING, A.S.D., TIE ROD COUPLING DETAILS, CLAMP DETAILS AND SET CLAMP DETAILS.
10. LENGTH REFERS TO THE AMOUNT OF PIPE WHICH MUST BE TIED TOGETHER WITH TIE RODS. THE LENGTH OF TIE RODS ARE NOT INCLUDED.
11. STAR BOLTS NOT ALLOWED ON PIPE LARGER THAN 18".
12. MINIMUM OF 4 RODS REQUIRED ON 16" PIPE IF STAR BOLTS ARE USED.
13. TEES ARE TO BE RODDED ON BRANCH ONLY.
14. ALL VALVES TO BE RODDED IN BOTH DIRECTIONS.

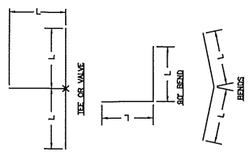

STONEGATE VILLAGE METROPOLITAN DISTRICT	
LENGTH OF TIED PIPE	
SCALE: NONE	DATE: 4/00
APPROVED: RJG DISTRICT ENGINEER	

PIPE BEDDING:

(a) Installation of Bedding and Pipe: After completion of the trench excavation and proper preparation of the foundation, six inches (6") of bedding material shall be placed on the trench bottom for support under the pipe. Bell holes shall be dug deep enough to provide a minimum of two inches (2") of clearance between the bell and bedding material. All pipe shall be installed in such a manner as to insure full support of the pipe barrel over its entire length. After the pipe is adjusted for line and grade, and the joint is made, the bedding material shall be carefully placed and tamped under the haunches of the pipe and in the previously dug bell holes.

Tamping is herein defined as the act of placing approved bedding material under the haunches of the pipe, paying particular attention to voids, bell holes, and wing holes. The purpose of tamping is to ensure uniform support for the pipe.

The limits of bedding shall be from six inches (6") below the bottom of the pipe to twelve inches (12") above the top of the pipe. Approved backfill may then be installed to the groundline. See Section 6 of these Standards for backfill and compaction of backfill.

Compaction of bedding is not required. The only requirement is sufficient tamping to achieve uniform support under the pipe. See Sheet 8 of the Standard Drawings for a typical trench cross section.

(b) Bedding Material: The bedding material shall be a clean well–graded sand or squeegee sand and shall conform to the following limits when tested by means of laboratory sieves:

Well–Graded Sand

Sieve Size	Total Percent Passing by Weight
3/8 inch	100
No. 4	95–100
No. 8	80–100
No. 16	50–85
No. 30	25–60
No. 50	10–30
No. 100	2–10
No. 200	0

Squeegee Sand

Sieve Size	Total Percent Passing by Weight
3/8 inch	100
No. 100	0–5

If approved by the District, fines form the trench walls and spoils pile may be used to provide uniform support for the pipe. No rock or stone larger than that allowed by the sieve analysis, or any other detrimental substance, shall be placed closer to the pipe than six inches (6"). Approved bedding materials shall be stockpiled on the jobsite to be used in the event natural materials become unsatisfactory. The District reserves the right to require the use of the specified bedding material at any time.

STONEGATE VILLAGE METROPOLITAN DISTRICT	
PIPE BEDDING	
SCALE: NONE	DATE: 4/00
APPROVED: RJG DISTRICT ENGINEER	

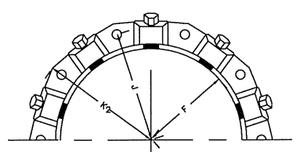

MECHANICAL JOINT RESTRAINT

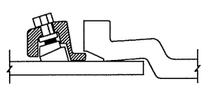

WEDGE DETAIL

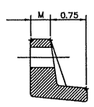

BOLT HOLE DETAIL

	NOMINAL PIPE SIZE	NO. OF BOLTS	NO. OF WEDGES	K2 INCHES	J INCHES	F INCHES	M INCHES	
PVC	4"	2	2					PVC
	6"	6	3	11.12	9.5	7.00	0.88	
	8"	6	4	13.37	11.75	9.15	1.00	
	10"	8	6	15.62	14.00	11.20	1.00	
	12"	8	8	17.88	16.25	13.30	1.25	
DI	4"	4	2					DI
	6"	6	3	11.12	9.5	7.00	0.88	
	8"	6	4	13.37	11.75	9.15	1.00	
	10"	8	6	15.62	14.00	11.20	1.00	
	12"	8	8	17.88	16.25	13.30	1.25	

NOTES:

1. REFER TO SHEET W–19 SECTION 6.10.
2. DIMENSIONS FOR 16" AND 20" D.I. PIPE NOT SHOWN.

STONEGATE VILLAGE METROPOLITAN DISTRICT	
MECHANICAL JOINT RESTRAINT DETAILS	
SCALE: NONE	DATE: 4/00
APPROVED: RJG DISTRICT ENGINEER	

2000 REVISION

SHEET 65

DATE	REVISIONS	DRAWN BY
3 04-03-2020	Final Submittal for Construction	ASD
2 01-13-2020	Removal/update details.	SEK
1 10-29-2019	Changed pipe stone from 8" to 12".	SEK

Manhard CONSULTING
7600 East Orchard Road, Suite 150-N, Greenwood Village, CO 80111 ph:303.708.0500 manhard.com
Civil Engineering | Surveying & Geospatial Services | GIS
Water Resource Management | Construction Management

COMPARK VILLAGE SOUTH, FILING NO 1

TOWN OF PARKER, COLORADO

WATER DETAILS

COLORADO REGISTERED PROFESSIONAL ENGINEER 37642 04-03-2020

PROJ. MGR.: ---
PROJ. ASSOC.: ---
DRAWN BY: SEK
DATE: 01-13-2020

SHEET 6 OF 7

© 2019 MANHARD CONSULTING, LTD. ALL RIGHTS RESERVED

Plotted: 4/3/2020 9:47 AM Dwg Name: P:\Grants\Gentofts\04-Mercer Fan & Water\dwg\Eng\Final Drawings\Plan Set\Official\CLCPWS Waterline Bond\Construction Plan\WATER DETAILS.dwg Updated By: SKrabab

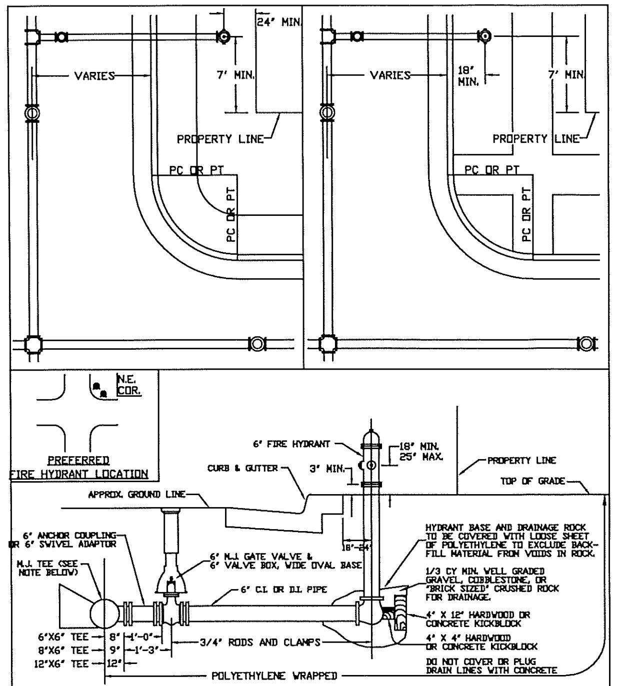

FIRE HYDRANTS

Manufacturer	Model No.	Options to be furnished
Mueller Company	Centurion Model 423	Furnish standard product, no additional options required.
Waterous Company	Pacer WB-67	Hydrant shall include a bronze bushed shoe providing bronze to bronze seating for the main valve complete with O-rings for sealing.

NOTES:

1. ALTERNATE TO THE ABOVE: FASTEN M.J. VALVE DIRECTLY TO A M.J. ANCHOR TEE (ALSO CALLED SWIVEL TEE)
2. NO HORIZONTAL OR VERTICAL BENDS ARE ALLOWED IN FIRE HYDRANT BRANCH OR SPRINKLER LINES.
3. FOR ACCEPTABLE VALVE BOXES, SEE 34 OF 68.
4. NO PORTION OF FIRE HYDRANT MAY PROTRUDE INTO SIDEWALK AREA.

STONEGATE VILLAGE METROPOLITAN DISTRICT
FIRE HYDRANTS
LOCATION & INSTALLATION
SCALE: NONE DATE: 4/00
APPROVED: RJG
DISTRICT ENGINEER

PIPE LOCATION SYSTEM

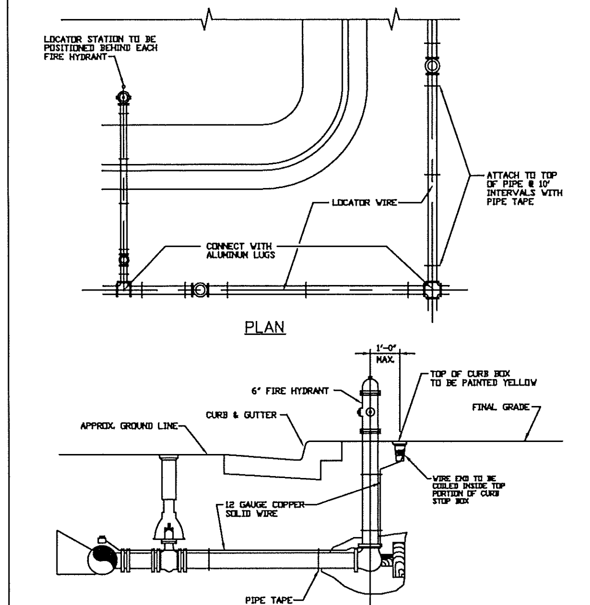

SECTION VIEW @ FIRE HYDRANT

NOTES:

1. FOR USE ON ALL DUCTILE IRON AND PVC WATER MAINS.
2. LOCATOR STATION POSITION MAY BE MODIFIED AT THE DIRECTION OF THE DISTRICT ENGINEER.
3. A CONTINUITY TEST WILL BE REQUIRED PRIOR TO PROBATIONARY ACCEPTANCE.
4. A WIRE-IMPREGNATED BLUE LOCATION TAPE WILL BE CONSTRUCTED ABOVE EACH WATER SERVICE AND BURIED MAX. 1 FOOT BELOW GRADE. THIS IS NOT TO BE ATTACHED TO THE 12 GA. LOCATOR WIRE.

STONEGATE VILLAGE METROPOLITAN DISTRICT
LOCATOR WIRE DETAILS
SCALE: NONE DATE: 4/00
APPROVED: RJG
DISTRICT ENGINEER

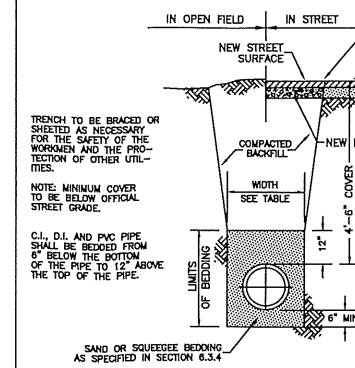

PIPE DIAMETER	MINIMUM WIDTH	MAXIMUM WIDTH
4"	1'-4"	2'-4"
6"	1'-6"	2'-6"
8"	1'-8"	2'-8"
12"	2'-0"	3'-0"
16"	2'-4"	3'-4"
20"	2'-8"	3'-8"
24"	3'-0"	4'-0"

STANDARD TRENCH SECTION

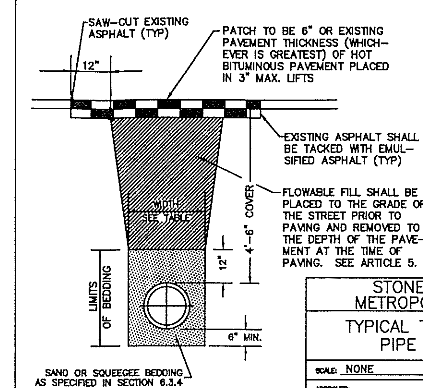

STREET CUT PATCH

STONEGATE VILLAGE METROPOLITAN DISTRICT
TYPICAL TRENCH SECTION
PIPE PROTECTION
SCALE: NONE DATE: 4/00
APPROVED: RJG
DISTRICT ENGINEER

NOTE:
PLUG SHALL BE MECHANICALLY RESTRAINED:
A – FOR SLEEVE TYPE MACHINED COUPLING PIPE TIE BACK TO NEXT COUPLING.
B – FOR BELL AND SPIGOT PIPE TIE TO BELL.

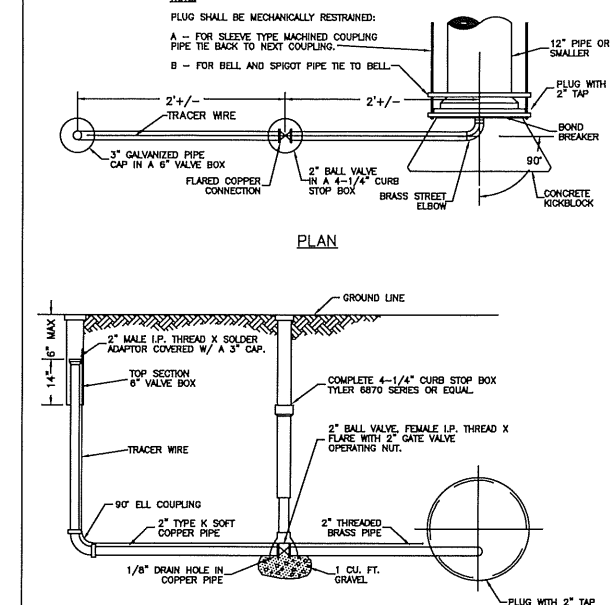

STONEGATE VILLAGE METROPOLITAN DISTRICT
BLOW-OFF INSTALLATION
FOR 12" & SMALLER PIPE
SCALE: NONE DATE: 4/00
APPROVED: RJG
DISTRICT ENGINEER

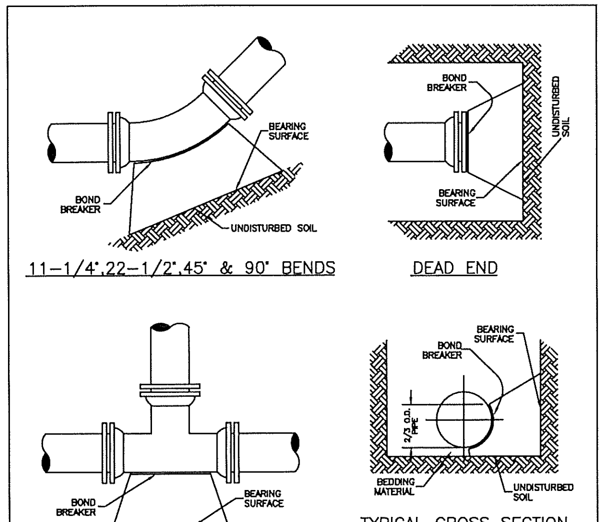

MINIMUM BEARING SURFACE AREA
(IN SQUARE FEET)

SIZE OF PIPE	BENDS 11-1/4°	BENDS 22-1/2°	BENDS 45°	BENDS 90°	TEE OR DEAD END
4"	1.00	1.00	1.00	1.80	1.50
6"	1.00	1.25	2.25	4.00	3.00
8"	1.00	2.00	4.00	7.50	5.25
12"	2.00	4.25	8.25	15.25	11.00
16"	3.50	6.50	12.50	23.00	18.50
20"	5.00	10.00	19.50	35.50	25.00
24"	6.50	13.00	28.00	47.00	33.00

NOTES:

1. ON 16" AND 20" TRANSMISSION MAINS ALL BENDS SHALL BE BOTH RODDED AND KICKBLOCKED.
2. BEARING SURFACES SHOWN IN CHART ARE MINIMUM.
3. BASED ON 150 PSI PIPE PRESSURE PLUS WATER HAMMER:
   4", 6" AND 8" WATER HAMMER = 120 PSI.
   12" WATER HAMMER = 110 PSI
   16", 20" AND 24" WATER HAMMER = 70 PSI.
4. SOIL BEARING CAPACITY = 3,000 LBS./SQ. FT.
5. ALL VALVES, TEES, BENDS AND PLUGS SHALL BE RODDED AND KICKBLOCKED.

STONEGATE VILLAGE METROPOLITAN DISTRICT
CONCRETE KICKBLOCKS
BEARING SURFACES AND INSTALLATION
SCALE: NONE DATE: 4/00
APPROVED: RJG
DISTRICT ENGINEER

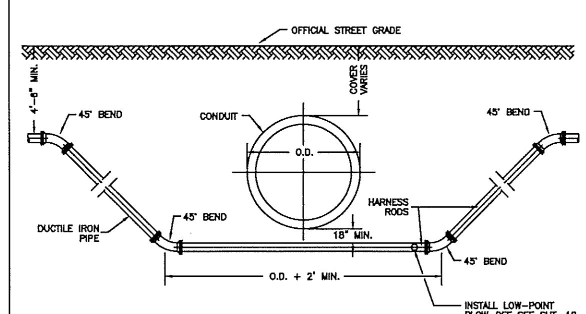

NOTES:

1. LENGTH OF EXTENSION OF PIPE AND HARNESS RODS SHALL BE IN ACCORDANCE WITH THESE ENGINEERING STANDARDS.
2. ALL WATER MAINS TWELVE (12") INCHES OR SMALLER, WHICH CROSS UNDER DISTRICT CONDUITS SHALL BE DUCTILE IRON.
3. A BORED CROSSING MAY BE REQUIRED BY THE ENGINEER.
4. THE WATER LINE SHALL BE INSTALLED BELOW ANY SEWER UNDERDRAINS.

STONEGATE VILLAGE METROPOLITAN DISTRICT
CONDUIT OR STORM SEWER CROSSING
SCALE: NONE DATE: 4/00
APPROVED: RJG
DISTRICT ENGINEER

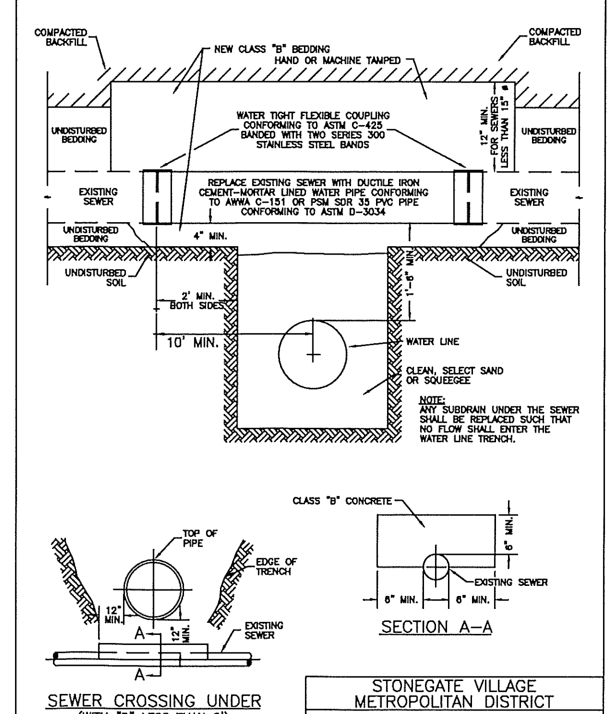

STONEGATE VILLAGE METROPOLITAN DISTRICT
CROSSING
STORM & SANITARY SEWERS
SCALE: NONE DATE: 4/00
APPROVED: RJG
DISTRICT ENGINEER

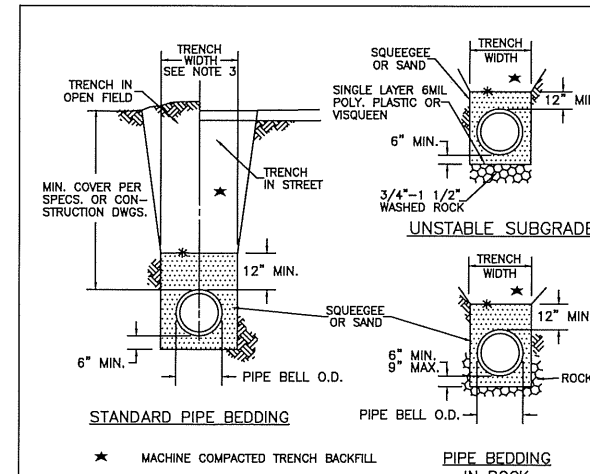

★ MACHINE COMPACTED TRENCH BACKFILL
✳ LIMIT OF SLOPING OR BENCHING OF TRENCH WALLS
UNDISTURBED GROUND

NOTES:

1. MIN. COVER TO BE BELOW FINAL STREET GRADE WHEN AVAILABLE.
2. TRENCH TO BE BRACED OR SHEETED AS NECESSARY FOR THE PROTECTION OF OTHER UTILITIES AND TO MEET OSHA SAFETY REQUIREMENT.
3. TRENCH WIDTH SHALL NOT BE MORE THAN 16" NOR LESS THAN 12" WIDER THAN THE LARGEST OUTSIDE DIAMETER OF THE PIPE LAID THEREIN (BELL OR COUPLING O.D. IF APPLICABLE).

STONEGATE VILLAGE METROPOLITAN DISTRICT
BEDDING DETAILS
SCALE: NONE DATE: 4/00
APPROVED: RJG
DISTRICT ENGINEER

	DATE	REVISIONS	DRAWN BY
3	04-03-2020	Final Submittal for Construction	ASD
2	01-13-2020	Remove/update details.	SEK
1	10-29-2019	Changed pipe sizing from 8" to 12".	SEK

Manhard CONSULTING LTD
7600 East Orchard Road, Suite 150-N, Greenwood Village, CO 80111 ph:303.708.0500 manhard.com
Civil Engineering | Surveying & Geospatial Services | GIS
Water Resource Management | Construction Management

COMPARK VILLAGE SOUTH, FILING NO 1
TOWN OF PARKER, COLORADO
WATER DETAILS

COLORADO REGISTERED PROFESSIONAL ENGINEER 37642 04-03-2020

PROJ. MGR.: GTT
PROJ. ASSOC.: ---
DRAWN BY: SEK
DATE: 01-13-2020

SHEET
7 OF 7

© 2018 MANHARD CONSULTING, LTD. ALL RIGHTS RESERVED

Plotted: 4/3/2020 9:47 AM Dwg Name: P:\Cpqke\Cpq\ComSouth\4-Master Sun & Water\dwg\Eng\Final Drawings\Plan Set\Office\CEPKS Waterline Bore\Construction Plans\WATER DETAILS.dwg Updated By: Skrehab